KUNZMAN ASSOCIATES, INC.

LLUH CAMPUS TRANSFORMATION PROJECT

FOCUSED TRAFFIC ANALYSIS

July 19, 2013

Traffic Engineering | Transportation Planning | Parking | Noise/Vibration | Expert Witness
Air Quality | Global Climate Change | Health Risk Assessment

KUNZMAN ASSOCIATES, INC.

LLUH CAMPUS TRANSFORMATION PROJECT

FOCUSED TRAFFIC ANALYSIS

July 19, 2013

Prepared by:

Carl Ballard, LEED GA, and
William Kunzman, P.E.

William Kunzman

REGISTERED PROFESSIONAL ENGINEER
WILLIAM A. KUNZMAN
No. TR0056
TRAFFIC
STATE OF CALIFORNIA

1111 Town & Country Road, Suite 34
Orange, California 92868
(714) 973-8383

www.traffic-engineer.com

5341

Table of Contents

I. Introduction 1
- **A. Project Description 1**
- **B. Study Area 2**
- **C. Analysis Methodology 3**
- **D. Definition of Deficiency and Significant Impact 5**
  - 1. Definition of Deficiency 5
  - 2. Definition of Significant Impact 6

II. Existing Conditions 10
- **A. Existing Roadway System 10**
- **B. Existing Volumes 10**
- **C. Existing Level of Service 10**
- **D. Existing Traffic Signal Warrant Analysis 11**
- **E. Planned Transportation Improvements and Relationship to General Plan 11**

III. Project Traffic 19
- **A. Project Description 19**
- **B. Trip Generation 20**
- **C. Project Traffic Contribution Test 21**

IV. Future Conditions 23
- **A. Future Volumes 23**
  - 1. Opening Year (2013) Without Project 23
  - 2. Opening Year (2013) With Project 23
  - 3. Opening Year (2023) Without Project 23
  - 4. Opening Year (2023) With Project 23
- **B. Future Level of Service 23**
  - 1. Opening Year (2013) Without Project 23
  - 3. Opening Year (2013) With Project 24
  - 1. Opening Year (2023) Without Project 24
  - 3. Opening Year (2023) With Project 25
- **C. Future Traffic Signal Warrant Analysis 26**
- **D. Congestion Management Program Freeway Evaluation 26**

V. Conclusions and Recommendations 43
- **A. Summary 43**
- **B. Existing Conditions 44**
- **C. Existing Traffic Signal Warrant Analysis 45**
- **D. Project Traffic 45**
- **E. Future Conditions 46**
- **F. Future Traffic Signal Warrant Analysis 47**
- **G. Recommendations 47**

APPENDICES

Appendix A – Glossary of Transportation Terms

Appendix B – Traffic Count Worksheets

Appendix C – Future Growth Increment Calculation Worksheets

Appendix D – Explanation and Calculation of Intersection Delay

Appendix E – Traffic Signal Warrant Worksheets

List of Tables

Table 1. Traffic Volume Comparison 7
Table 2. Existing Intersection Delay and Level of Service 12
Table 3. Project Trip Generation 22
Table 4. Opening Year (2013) Without Project Intersection Delay and Level of Service 27
Table 5. Opening Year (2013) With Project Intersection Delay and Level of Service 28
Table 6. Opening Year (2023) Without Project Intersection Delay and Level of Service 29
Table 7. Opening Year (2023) With Project Intersection Delay and Level of Service 30
Table 8. Study Area Improvement Summary 49

List of Figures

Figure 1. Project Location Map 8
Figure 2. Site Plan 9
Figure 3. Existing Through Travel Lanes and Intersection Controls 13
Figure 4. Existing Average Daily Traffic Volumes 14
Figure 5. Existing Morning Peak Hour Intersection Turning Movement Volumes 15
Figure 6. Existing Evening Peak Hour Intersection Turning Movement Volumes 16
Figure 7. City of Loma Linda General Plan Circulation Element 17
Figure 8. City of Loma Linda General Plan Roadway Cross-Sections 18
Figure 9. Opening Year (2013) Without Project Average Daily Traffic Volumes 31
Figure 10. Opening Year (2013) With Project Average Daily Traffic Volumes 32
Figure 11. Opening Year (2023) Without Project Average Daily Traffic Volumes 33
Figure 12. Opening Year (2023) With Project Average Daily Traffic Volumes 34
Figure 13. Opening Year (2013) Without Project Morning Peak Hour Intersection Turning Movement Volumes 35
Figure 14. Opening Year (2013) Without Project Evening Peak Hour Intersection Turning Movement Volumes 36
Figure 15. Opening Year (2013) With Project Morning Peak Hour Intersection Turning Movement Volumes 37
Figure 16. Opening Year (2013) With Project Evening Peak Hour Intersection Turning Movement Volumes 38
Figure 17. Opening Year (2023) Without Project Morning Peak Hour Intersection Turning Movement Volumes 39
Figure 18. Opening Year (2023) Without Project Evening Peak Hour Intersection Turning Movement Volumes 40
Figure 19. Opening Year (2023) With Project Morning Peak Hour Intersection Turning Movement Volumes 41
Figure 20. Opening Year (2023) With Project Evening Peak Hour Intersection Turning Movement Volumes 42
Figure 21. Circulation Recommendations 50

I. Introduction

The purpose of this report is to provide an assessment of the traffic impacts resulting from the development of the proposed LLUH Campus Transformation project and to identify the traffic mitigation measures necessary to maintain the established level of service standard for the elements of the impacted roadway system. The traffic issues related to the proposed land use and development have been evaluated in the context of the California Environmental Quality Act.

The City of Loma Linda is the lead agency responsible for preparation of the traffic impact analysis, in accordance with California Environmental Quality Act authorizing legislation. This report analyzes traffic impacts for existing and Opening Year (2013 and 2023) traffic conditions.

Although this is a technical report, every effort has been made to write the report clearly and concisely. To assist the reader with those terms unique to transportation engineering, a glossary of terms is provided in Appendix A.

A. Project Description

The proposed development is located north of Barton Road between Campus Street and Barton Road in the City of Loma Linda. A vicinity map showing the project location is provided on Figure 1. Figure 2 illustrates the project site plan.

LLUAHSC, doing business as LLUH, is proposing the renovation of its campus referred to as the "LLUH Campus Transformation Project. The LLUH Campus Transformation Project is a Master Plan that consists of a multi-phased development to construct new facilities and improvements to the existing campus facilities in order to accommodate growth in the services provided, and to meet regulatory requirements. The proposed project would provide construction of new facilities, modernization of existing facilities, and replacement of the 1967 portion hospital structure in response to California's SB 1953 Hospital Seismic Safety Act mandate. The existing campus and all improvements proposed as part of the Master Plan are in the City of Loma Linda; the City is the Lead Agency for CEQA purposes. It is anticipated that the Master Plan would be built out in phases over a 10-year period.

Proposed facilities and improvements associated with the Master Plan include: 1) a six-story, approximate 250,000 square-foot, 760-space patient and visitor parking structure; 2) a twelve-story, approximate 732,000 square-foot hospital with 464 beds and 80 parking spaces; 3) an approximate 50,000 square-foot central utility plant; 4) an approximate 14,000 square-foot Southern California Edison (SCE) off-site electrical substation; 5) two-story, approximate 9,000 square-foot addition to the existing dental school; 6) a four-story approximate 90,000 square-foot research building; and 7) tenant improvements and adaptive reuse of the vacated portions of the existing hospital.

The proposed new hospital would consist of acute care hospital space. The facility will have shared and support services located in the first three levels of a shared podium, with two bed towers above serving separate pediatric and adult populations. The new hospital would provide for the relocation and decommissioning of the existing acute care services in

seismically non-compliant structures. The new building would include approximately 464 patient beds, new Pediatric and Adult Emergency Departments, Perioperative Suites, Imaging Departments, and other support service departments. The total licensed capacity of the Medical Center would decrease from the current license of 719 beds to a total of approximately 650 beds. Upon completion of the new building and surrounding site, all inpatient functions will transfer to the new adjacent location.

The new parking structure would be located on the northeast corner of Barton Road and Campus Street. The 1.9-acre site is currently developed with 83 surface parking spaces. Improvements would include a new access point on Barton Road and removal of the 83 surface parking spaces. The new hospital would be located on an 11.2-acre site located on Anderson Street between Barton Road and Prospect Avenue that is developed with the existing hospital. The site is currently developed with 550 surface parking spaces. Improvements at the site would include two new access points on Barton Road and two new road alignments on Anderson Street at Prospect Avenue and Starr Street. The new central utility plant would be located on Anderson Street between Stewart Street and Union Pacific railroad line. The site is also currently developed with 40 surface parking spaces and a 10,000 square-foot office building, which would be demolished to allow for construction of the central utility plant. A new SCE electrical substation would be needed to serve the Proposed Project and would be located on a 1.3-acre site located on Anderson Street just north of the Union Pacific Railroad line.

The 8,900 square foot dental school addition would occur on a 0.5-acre site located on the north side of the existing School of Dentistry (Prince Hall) located at 11029 University Avenue. Approximately 3,000 square feet of the existing building will need to be remodeled to accommodate the addition. The addition will be designed to complement the existing architecture and fit appropriately up to the cul-de-sac.

A new 90,000 square-foot research facility is proposed on or near the 1.9-acre site of Risley Hall, an existing laboratory and classroom building. The new facility will provide expanded laboratory and research office space as well as space for new high-tech research modalities to allow for increased interdisciplinary research. The facility is planned to be a three to four-story structural steel building approximately 50 feet in height.

The focused traffic analysis accounts for the redistribution of traffic volumes with the construction of the new parking areas and access points. It should be noted that the central utility plant and electrical substation are accounted for with the areawide growth projection of future traffic volumes. The dental school addition and research building trip generation are based upon the number of students at the Loma Linda University and no new students have been proposed. The tenant improvements and adaptive reuse of the vacated portions of the existing hospital building trip generation are based upon the number of beds and a net reduction in beds has been proposed.

B. Study Area

Regional access to the project site is provided by the I-10 Freeway. Local access is provided by various roadways in the vicinity of the site. The east-west roadways which will be most affected by the project include Stewart Street, University Avenue, Mound Street, Taylor

Street, Prospect Avenue, Starr Street, San Juan Street, and Barton Road. The north-south roadways expected to provide local access include Campus Street, Anderson Street, and Parkland Street.

A series of scoping discussions were conducted with the following agencies to define the desired analysis locations for each future analysis year:

- City of Loma Linda
- Loma Linda University Health Services
- Loma Linda University Medical Center

In addition, the East Valley Traffic Model staff has also been contacted to discuss the project and its associated travel patterns.

No analysis is required further than 5 miles from the project site. The roadway elements that must be analyzed are dependent on both the analysis year (Opening Year) and project generated traffic volumes. The identification of the study area, and the intersections and highway segments requiring analysis, was based on an estimate of the two-way traffic volumes on the roadway segments near the project site. All arterial segments are required to be included in the analysis when the anticipated project volume equals or exceeds 50 two-way trips in the peak hours. The requirement is 100 two-way peak hour trips for freeways.

The project does not contribute additional traffic greater than the freeway threshold volume of 100 two-way peak hour trips to a Freeway. The project does not contribute additional traffic greater than the arterial link threshold volume of 50 two-way trips in the peak hours on facilities serving intersections in the City of Loma Linda.

C. Analysis Methodology

The analysis of the traffic impacts from the proposed development and the assessment of the required mitigation measures were based on an evaluation of the existing and forecast traffic conditions in the vicinity of the site without and with the project. The following analysis years are considered in this report:

- Existing Conditions[1]
- Project Opening Year Conditions (2013)
  - Campus Street parking structure completed
  - Stewart Street underpass completed
- Project Opening Year Conditions (2023)
  - Campus Street/Barton Road parking structure completed

[1] Stewart Street is currently closed for construction (between Campus Street and Anderson Street) and University Avenue is temporarily open for through traffic (between Campus Street and Anderson Street). Based upon discussions with City of Loma Linda staff, a comparison of the differences in traffic volumes for the two sets of data (Year 2011 and Year 2013 – see Appendix B) has been prepared for the Barton Road intersections in Table 1. The traffic volume comparison data shows that a nominal decrease in traffic volumes has occurred in the study area and the Year 2011 traffic count data (taken before the Stewart Street road closure) has been used in this report.

- Anderson Street Hospital Entrance closed and aligned with Starr Street
- Barton Road access completed

Existing intersection traffic conditions were established through morning and evening peak hour traffic counts obtained by Kunzman Associates, Inc. from October 2011 (see Appendix B). In addition, truck classification counts were conducted at the study area intersections. The existing percent of trucks was used in the conversion of trucks to Passenger Car Equivalent's (see Appendix C).

Trip generation has been based upon rates obtained from the Institute of Transportation Engineers, Trip Generation, 9th Edition, 2012.

The average daily traffic volume forecasts have been determined using the growth increment approach on the East Valley Traffic Model Year 2000 and Year 2035 average daily traffic volume forecasts (see Appendix C). This difference defines the growth in traffic over the 35 year period. The incremental growth in average daily traffic volume has been factored to reflect the forecast growth between Year 2011 and Year 2035. For this purpose, linear growth between the Year 2000 base condition and the forecast Year 2035 condition was assumed. Since the increment between Year 2011 and Year 2035 is 24 years of the 35 year time frame, a factor of 0.69 (i.e., 24/35) was used.

The Opening Year daily and peak hour directional roadway segment volume forecasts have been determined using the growth increment approach on the East Valley Traffic Model Year 2000 and Year 2035 peak hour volumes. The growth increment calculation worksheets are shown in Appendix C. Current peak hour intersection approach/departure data is a necessary input to this approach. The existing traffic count data serves as both the starting point for the refinement process, and also provides important insight into current travel patterns and the relationship between peak hour and daily traffic conditions. The initial turning movement proportions are estimated based upon the relationship of each approach leg's forecast traffic volume to the other legs forecast volumes at the intersection. The initial estimate of turning movement proportions is then entered into a spreadsheet program consistent with the National Cooperative Highway Research Program Report 255. A linear programming algorithm is used to calculate individual turning movements that match the known directional roadway segment volumes computed in the previous step. This program computes a likely set of intersection turning movements from intersection approach counts and the initial turning proportions from each approach leg.

The Opening Year (2013 and 2023) traffic volumes have been interpolated from the Year 2035 traffic volumes based upon a portion of the future growth increment.

Quality control checks and forecast adjustments were performed as necessary to ensure that all future traffic volume forecasts reflect a minimum of 10% growth over existing traffic volumes. The result of this traffic forecasting procedure is a series of traffic volumes suitable for traffic operations analysis.

The technique used to assess the capacity needs of an intersection is known as the Intersection Delay Method (see Appendix D) based on the 2000 Highway Capacity Manual – Transportation Research Board Special Report 209. To calculate delay, the volume of traffic

using the intersection is compared with the capacity of the intersection. The signalized intersections are considered deficient (Level of Service F) if the overall intersection critical volume to capacity ratio equals or exceeds 1.0, even if the Level of Service defined by the delay value is below the defined Level of Service standard. The volume to capacity ratio is defined as the critical volumes divided by the intersection capacity. A volume to capacity ratio greater than 1.0 implies an infinite queue.

The Level of Service analysis for signalized intersections has been performed using optimized signal timing. This analysis has included an assumed lost time of two seconds per phase. Signal timing optimization has considered pedestrian safety and signal coordination requirements. Appropriate time for pedestrian crossings has also been considered in the signalized intersection analysis. The following formula has been used to calculate the pedestrian minimum times for all Highway Capacity Manual runs:

(Curb to curb distance) / (4 feet/second) + 7 seconds.

For existing and Opening Year traffic conditions, saturation flow rates of 1,800 vehicles per hour of green for through and right turn lanes and 1,700 vehicles per lane for single left turn lanes, 1,600 vehicles per lane for dual left turn lanes and 1,500 vehicles per lane for triple left turn lanes have been assumed for the capacity analysis.

The peak hour traffic volumes have been adjusted to peak 15 minute volumes for analysis purposes using the existing observed peak 15 minute to peak hour factors for all scenarios analyzed. Where improvements are planned, the peak hour factor has been adjusted upwards to 0.95. This is to account for the effects of congestion on peak spreading. Peak spreading refers to the tendency of traffic to spread more evenly across time as congestion increases.

D. Definition of Deficiency and Significant Impact

The following definitions of deficiencies and significant impacts have been developed in accordance with the City of Loma Linda requirements.

1. Definition of Deficiency

The definition of an intersection deficiency has been obtained from the City of Loma Linda General Plan and Measure V. The General Plan and Measure V state that peak hour intersection operations of Level of Service C or better are generally acceptable. To assure the adequacy of various public services and prevent degradation of the quality of life experienced by the residents of Loma Linda, all new development projects shall assure by implementation of appropriate mitigation measures that, at a minimum, traffic Levels of Service are maintained at a minimum of Level of Service C throughout the City, except where the current Level of Service is lower than Level of Service C. In any location where the Level of Service is below Level of Service C at the time an application for a development project is submitted, mitigation measures shall be imposed on that development project to assure, at a minimum, that the level of traffic service is maintained at Levels of Service that are no worse than those existing at the time an application for development is filed. In any location where the Level of

Service is F at the time an application for a development project is submitted, mitigation measures shall be imposed on that development project to assure, at a minimum, that the volume to capacity ratio is maintained at a volume to capacity ratio that is no worse than that existing at the time an application for development is filed. Projects where sufficient mitigation to achieve the above stated objectives is infeasible shall not be approved unless and until the necessary mitigation measures are identified and implemented.

2. Definition of Significant Impact

The identification of significant impacts is a requirement of the California Environmental Quality Act. The City of Loma Linda General Plan and Circulation Element have been adopted in accordance with California Environmental Quality Act requirements, and any roadway improvements within the City of Loma Linda that are consistent with these documents are not considered a significant impact, so long as the project contributes its "fair share" funding for improvements.

A traffic impact is considered significant if the project both: i) contributes measurable traffic to and ii) substantially and adversely changes the Level of Service at any off-site location projected to experience deficient operations under foreseeable cumulative conditions, where feasible improvements consistent with the City of Loma Linda General Plan cannot be constructed.

Table 1

Traffic Volume Comparison[1]

Intersection		Morning Peak Hour Traffic Volumes						Evening Peak Hour Traffic Volumes					
Roadway (NS)	Roadway (EW)	Date	Volume	Date	Volume	Difference	% Difference	Date	Volume	Date	Volume	Difference	% Difference
Anderson Street	Barton Road	10/2011	2,802	4/2013	2,873	71	2.5%	10/2011	3,049	4/2013	3,083	34	1.1%
Campus Street	Barton Road	10/2011	2,565	4/2013	2,375	-190	-7.4%	10/2011	2,556	4/2013	2,481	-75	-2.9%
Summary			5,367		5,248	-119	-2.2%		5,605		5,564	-41	-0.7%

Figure 1
Project Location Map

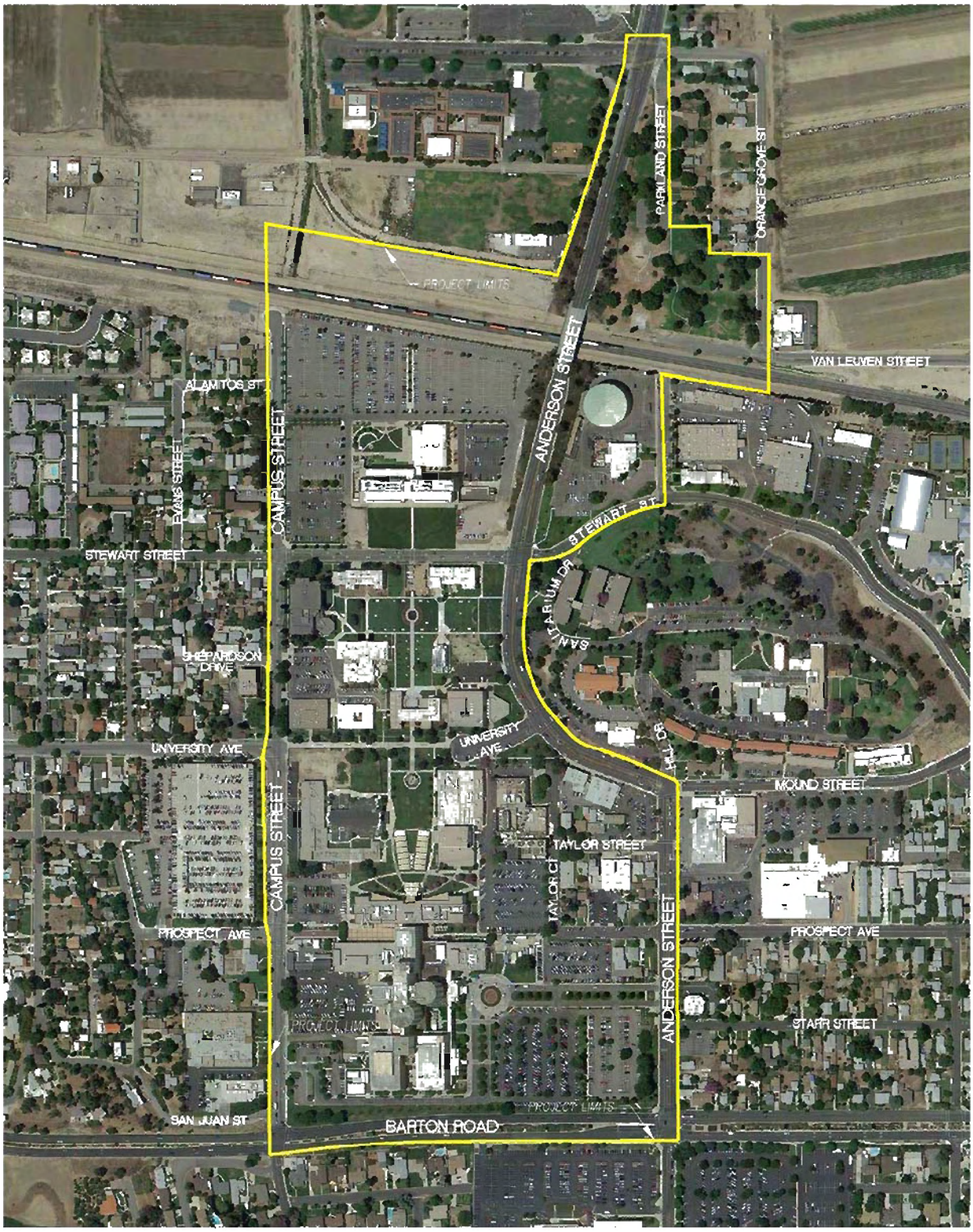

N

NTS

5341/1

KUNZMAN ASSOCIATES, INC.

OVER 35 YEARS OF EXCELLENT SERVICE

Figure 2
Site Plan

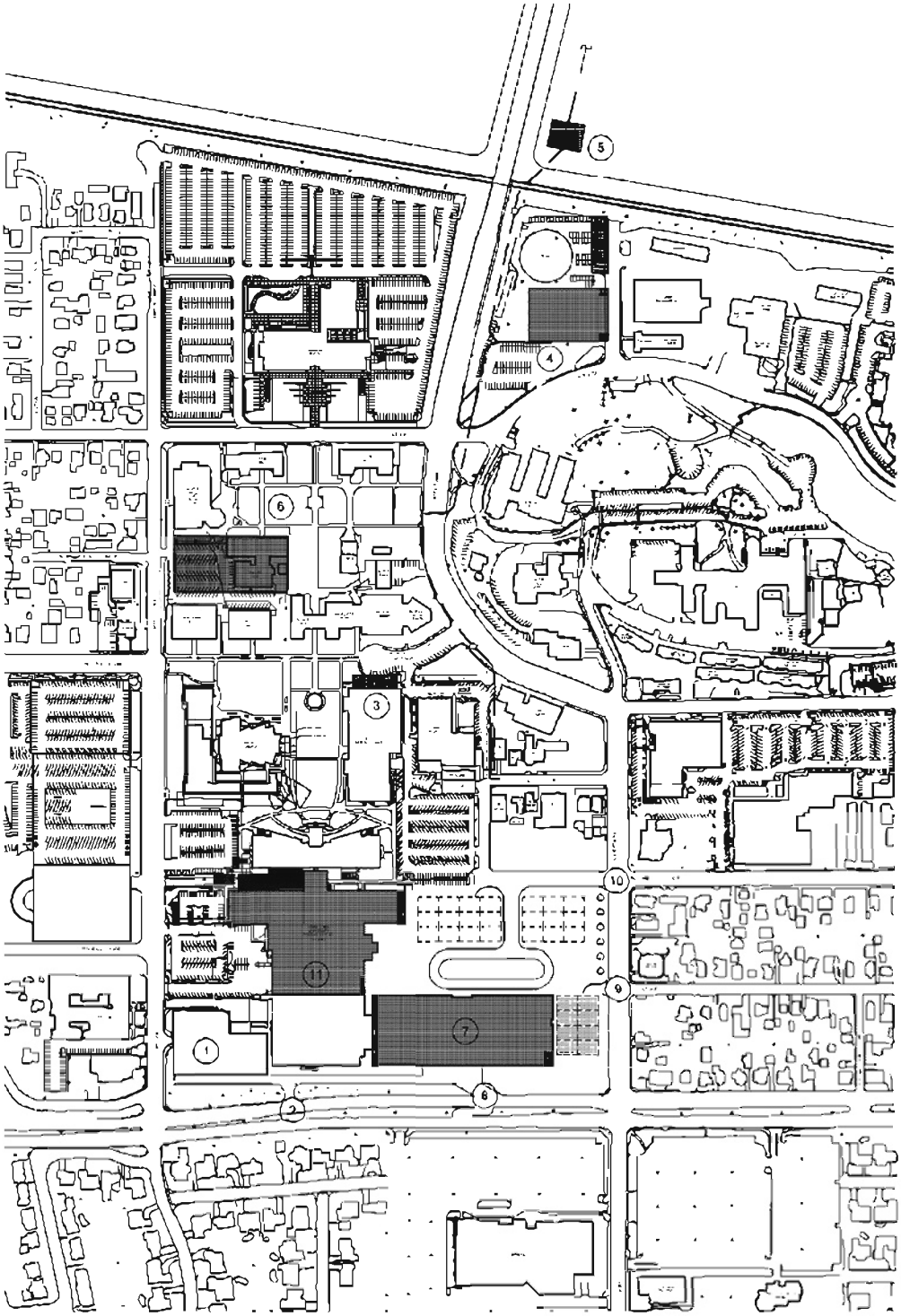

Legend

1. PARKING STRUCTURE
2. BARTON ACCESS
3. DENTAL SCHOOL ADDITION
4. CENTRAL UTILITY PLANT
5. SCE SUBSTATION
6. RESEARCH BUILDING
7. NEW HOSPTIAL BUILDING
8. AMBULANCE ONLY ENTRANCE AND TURN
9. ED ACCESS AND PARKING
10. PROSPECT ENTRANCE
11. BUILDING REUSE

N

NTS

5341/2

KUNZMAN ASSOCIATES, INC.

OVER 35 YEARS OF EXCELLENT SERVICE

II. Existing Conditions

A. Existing Roadway System

Figure 3 identifies the existing conditions for the study area roadways. The number of through lanes for existing roadways and the existing intersection controls are identified.

Regional access to the project site is provided by the I-10 Freeway. Local access is provided by various roadways in the vicinity of the site. The east-west roadways which will be most affected by the project include Stewart Street, University Avenue, Mound Street, Taylor Street, Prospect Avenue, Starr Street, San Juan Street, and Barton Road. The north-south roadways expected to provide local access include Campus Street, Anderson Street, and Parkland Street.

B. Existing Volumes

Figure 4 depicts the existing average daily traffic volumes. The existing average daily traffic volumes were factored from peak hour counts and 24-hour tube counts obtained by Kunzman Associates, Inc. in October 2011 (see Appendix B) using the following formula for each intersection leg:

PM Peak Hour (Approach + Exit Volume) x 11.5 = Daily Leg Volume.

This is a conservative estimate and may over estimate the average daily traffic volumes.

There are two peak hours in a weekday. The morning peak hour is between 7:00 AM and 9:00 AM, and the evening peak hour is between 4:00 PM and 6:00 PM. The actual peak hour within the two hour interval is the four consecutive 15 minute periods with the highest total volume when all movements are added together. Thus, the evening peak hour at one intersection may be 4:45 PM to 5:45 PM if those four consecutive 15 minute periods have the highest combined volume.

Existing intersection traffic conditions were established through morning and evening peak hour traffic counts obtained by Kunzman Associates, Inc. from October 2011 (see Appendix B) and are shown with the highest peak hour on Figures 5 and 6, respectively. Explicit peak hour factors have been calculated using the data collected for this effort as well.

C. Existing Level of Service

The existing delay and Level of Service for intersections in the vicinity of the project are shown in Table 2. The study area intersections currently operate at acceptable Levels of Service during the peak hours for existing traffic conditions, except for the following study area intersections that currently operate at unacceptable Levels of Service during the peak hours:

Campus Street (NS) at:
Barton Road (EW) - #5

Anderson Street (NS) at:
Barton Road - #14

Existing delay worksheets are provided in Appendix D.

D. Existing Traffic Signal Warrant Analysis

A traffic signal appears to currently be warranted at the following study area intersection for existing traffic conditions (see Appendix E):

Campus Street (NS) at:
Stewart Street (EW) - #1

The unsignalized intersections have been evaluated for traffic signals using the California Department of Transportation Warrant 3 Peak Hour traffic signal warrant analysis, as specified in the Manual of Uniform Traffic Control Devices 2003 California Supplement, dated May 20, 2004.

E. Planned Transportation Improvements and Relationship to General Plan

The City of Loma Linda General Plan Circulation Element is shown on Figure 7. Existing and future roadways are included in the Circulation Element of the General Plan and are graphically depicted on Figure 7. This figure shows the nature and extent of arterial highways that are needed to adequately serve the ultimate development depicted by the Land Use Element of the General Plan. The City of Loma Linda General Plan roadway cross-sections are illustrated on Figure 8.

Table 2

Existing Intersection Delay and Level of Service

Intersection	Traffic Control[3]	Intersection Approach Lanes[1]												Peak Hour Delay-LOS[2]	
		Northbound			Southbound			Eastbound			Westbound				
		L	T	R	L	T	R	L	T	R	L	T	R	Morning	Evening
Campus Street (NS) at:															
Stewart Street (EW) - #1	AWS	0.5	0.5	1	0	1	0	0	1	0	0.5	0.5	1	22.8-C	17.2-C
University Avenue (EW) - #2	AWS	0	1	0	0	1	0	0	1	0	0	0	0	17.6-C	12.5-B
Prospect Avenue (EW) - #3	TS	1	1	0	0	1	1	0	1	0	0	0	0	6.1-A	8.9-A
San Juan Street (EW) - #4	CSS	0	1	0	0	2	0	0	1	0	0	0	0	11.6-B	11.0-B
Barton Road (EW) - #5	TS	1	0.5	0.5	1	1	1	1	2	1	1	2	1	41.7-D	44.0-D
Parkland Street (NS) at:															
Stewart Street (EW) - #6	CSS	0	0	0	0	1	0	0	1	0	0	1	0	10.5-B	12.0-B
Anderson Street (NS) at:															
Stewart Street (EW) - #7	TS	1	2	d	1	2	d	1	0.5	0.5	1	0.5	0.5	20.4-C	16.4-B
University Avenue (EW) - #8	TS	1	2	0	0	2	1	1	0	1	0	0	0	6.5-A	7.7-A
Mound Street (EW) - #9	AWS	1.5	0.5	1	0	1	0	1	0.5	1.5	0	1	0	17.6-C	16.4-C
Taylor Street (EW) - #10	CSS	1	2	0	0	1.5	0.5	0	0	0	0	0	0	9.1-A	8.5-A
Prospect Avenue (EW) - #11	AWS	0	1.5	0.5	1	2	0	0	1	0	0.5	0	0.5	15.4-C	17.2-C
Main Project Access (EW) - #12	CSS	1	2	0	0	1.5	0.5	1	0	1	0	0	0	14.5-B	16.4-C
Starr Street (EW) - #13	CSS	0	1.5	0.5	1	2	0	0	0	0	0	1	0	12.7-B	13.1-B
Barton Road (EW) - #14	TS	1	0.5	0.5	1	1	1	2	2	1	1	2	1	40.8-D	37.4-D

[1] When a right turn lane is designated, the lane can either be striped or unstriped. To function as a right turn lane there must be sufficient width for right turning vehicles to travel outside the through lanes.
L = Left; T = Through; R = Right; d = Defacto Right Turn

[2] Delay and level of service has been calculated using the following analysis software: Traffix, Version 7.9.0215 (2008). Per the 2000 Highway Capacity Manual, overall average intersection delay and level of service are shown for intersections with traffic signal or all way stop control, the delay and level of service for the worst individual movement (or movements sharing a single lane) are shown.

[3] AWS = All Way Stop; TS = Traffic Signal; CSS = Cross Street Stop

Figure 3
Existing Through Travel Lanes and Intersection Controls

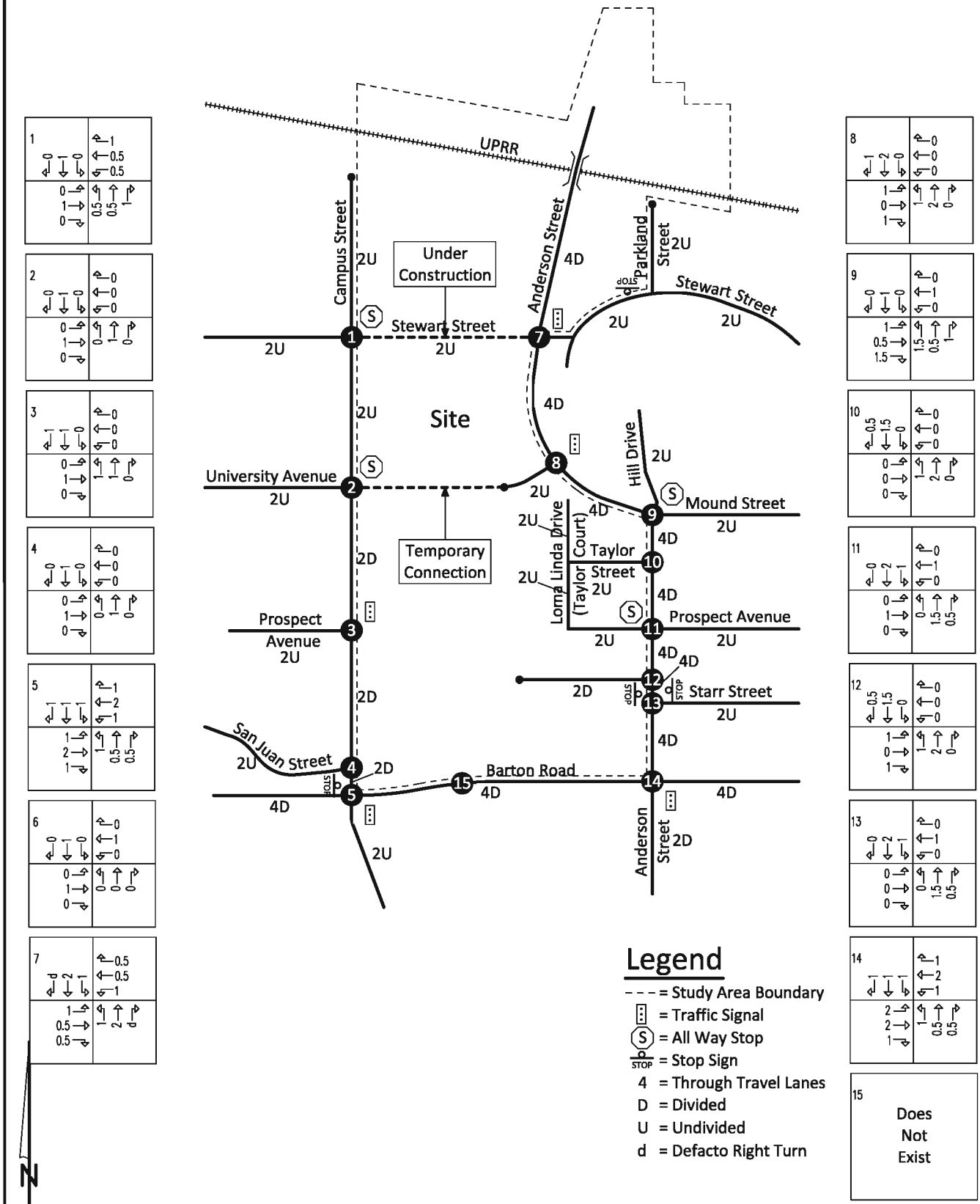

KUNZMAN ASSOCIATES, INC.

OVER 35 YEARS OF EXCELLENT SERVICE

Figure 4
Existing Average Daily Traffic Volumes

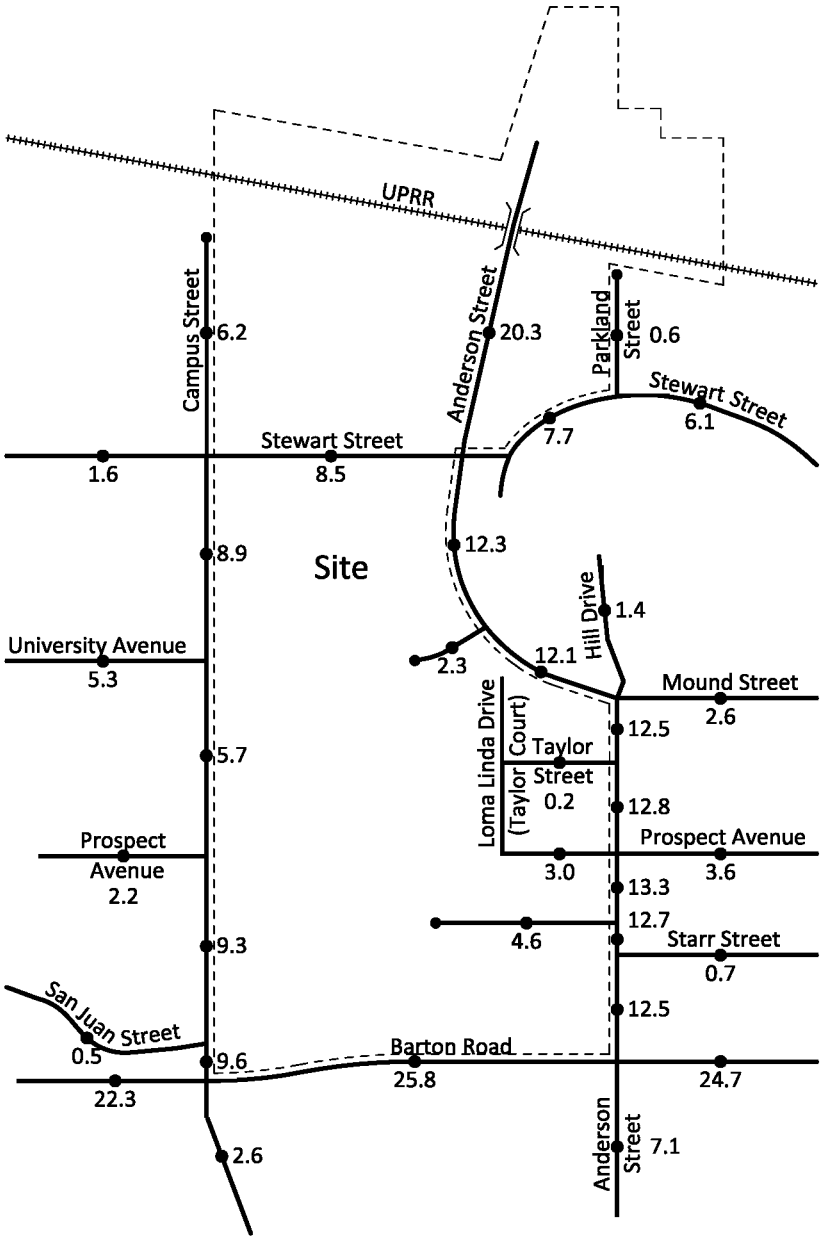

Legend

7.1 = Vehicles Per Day (1,000's)

N

NTS

5341/4

KUNZMAN ASSOCIATES, INC.

OVER 35 YEARS OF EXCELLENT SERVICE

Figure 5
Existing Morning Peak Hour Intersection Turning Movement Volumes

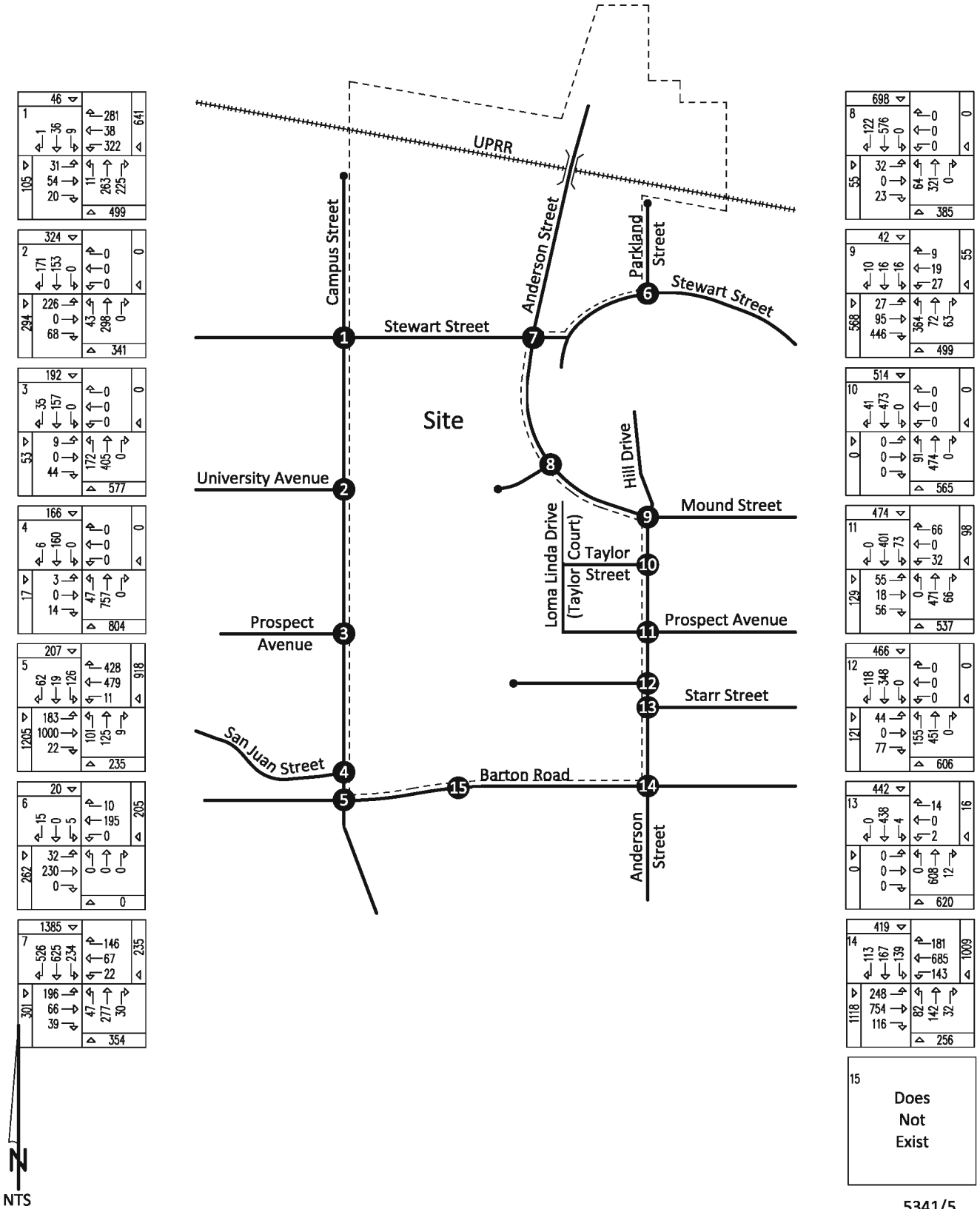

5341/5

KUNZMAN ASSOCIATES, INC. Intersection reference numbers are in upper left corner of turning movement boxes.

OVER 35 YEARS OF EXCELLENT SERVICE

Figure 6
Existing Evening Peak Hour Intersection Turning Movement Volumes

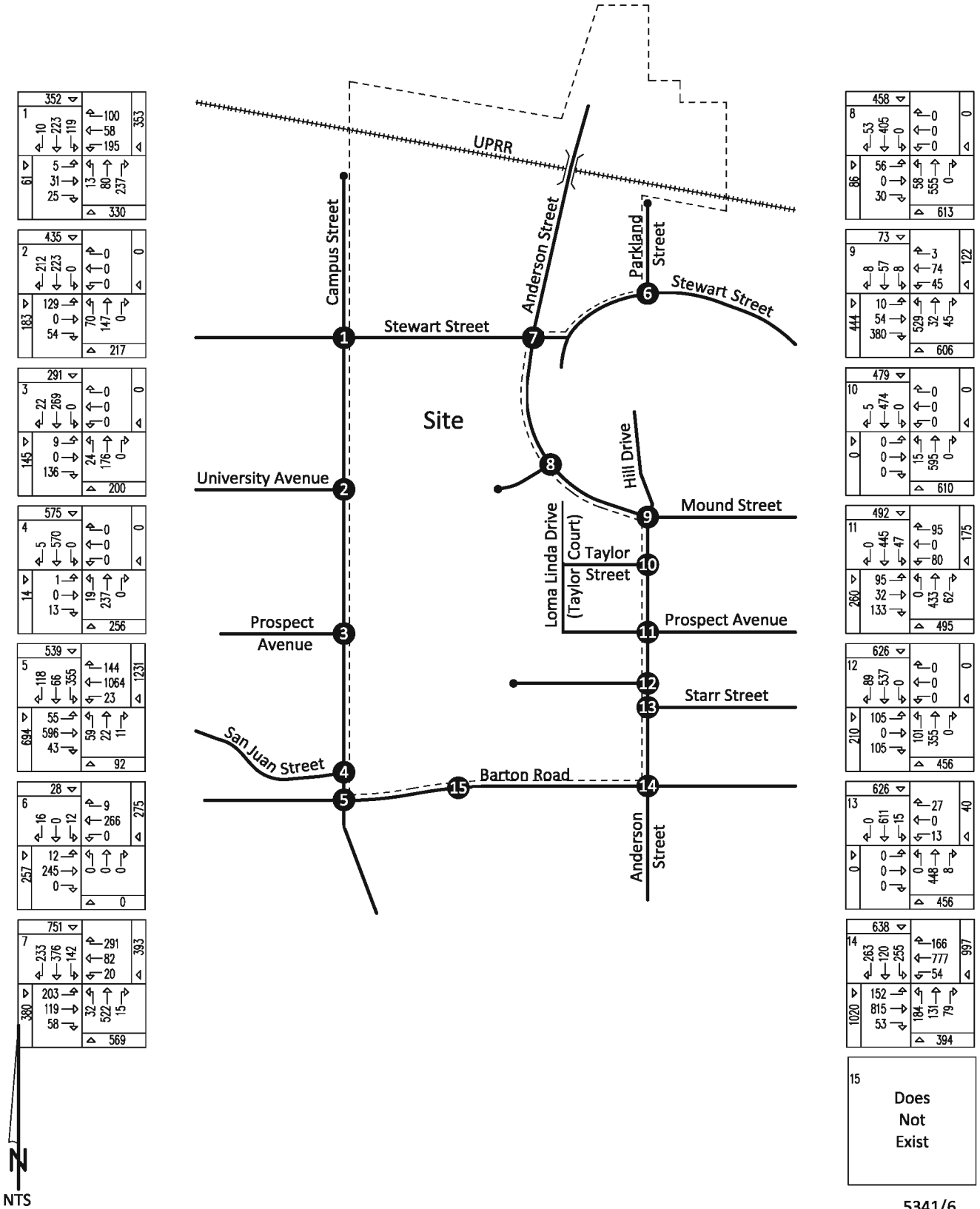

5341/6

KUNZMAN ASSOCIATES, INC. Intersection reference numbers are in upper left corner of turning movement boxes.

OVER 35 YEARS OF EXCELLENT SERVICE

Figure 7
City of Loma Linda General Plan Circulation Element

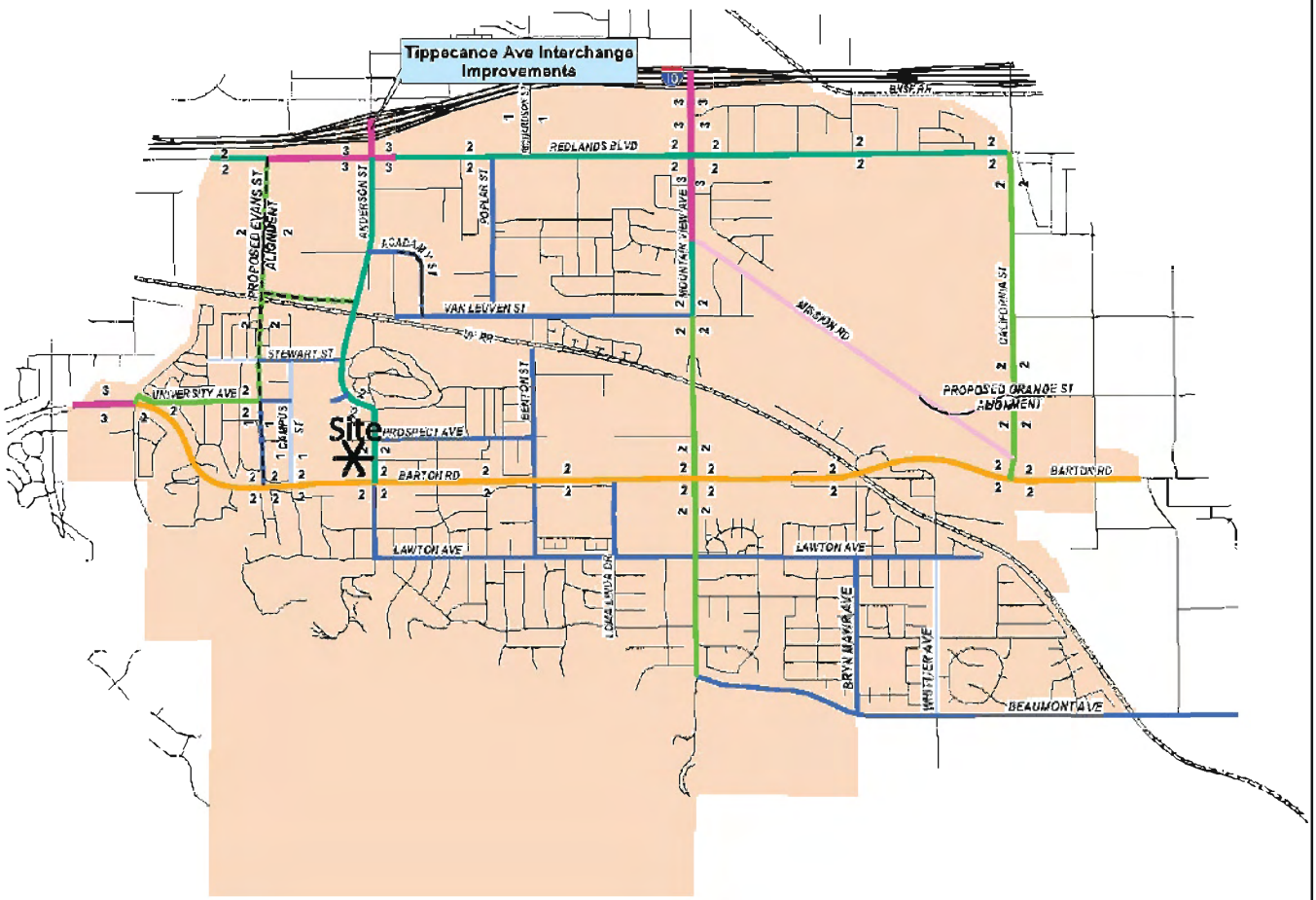

Legend

- FUTURE ROADWAY
- 2-LANE UNDIVIDED LOCAL STREET
- 2 LANE UNDIVIDED ROADWAY
- 2-LANE DIVIDED ROADWAY
- 4-LANE UNDIVIDED ROADWAY
- 4-LANE DIVIDED ROADWAY
- MODIFIED 4-LANE UNDIVIDED ROADWAY
- 6-LANE UNDIVIDED ROADWAY
- 6-LANE DIVIDED ROADWAY

JURISDICTIONAL AND INFRASTRUCTURE

- SPHERE OF INFLUENCE
- CITY LIMIT
- FREEWAY
- RAILROAD

N

NTS

KUNZMAN ASSOCIATES, INC.

OVER 35 YEARS OF EXCELLENT SERVICE

Source: City of Loma Linda

5341/7

Figure 8
City of Loma Linda General Plan Roadway Cross-Sections

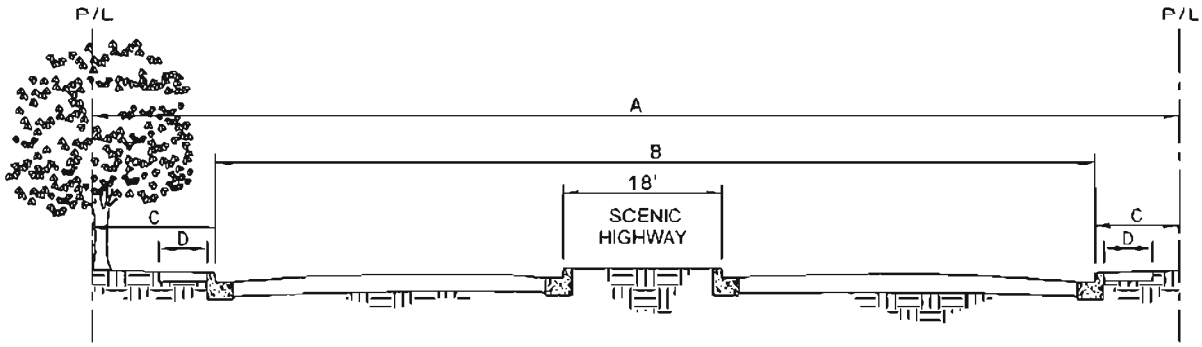

MAJOR ARTERIAL SECTION

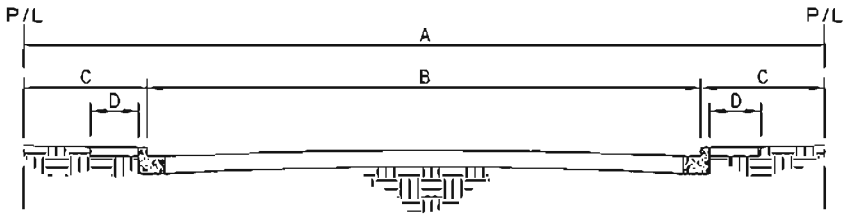

STANDARD SECTION

	DIMENSIONS				MIN PAVING	
STREET-TYPE	A	B	C	D*	T.I.	AC"/CAB"
LOCAL	60'	36'	12'	5'	6	3.5"/6"
COLLECTOR	64'	40'	12'	5'	6	3.5"/6"
COLLECTOR (SPECIAL)	66'	44'	11'	5'	7	4/6
SECONDARY HIGHWAY	88'	64'	12'	5'	8	4/7
MAJOR HIGHWAY	100'	72'	14'	5'	9	5/8
SCENIC HIGHWAY	120'	94'	13'	5'	9	5/8

*SIDEWALK EXTENDS TO PROPERTY LINE IN COMMERCIAL ZONE

5341/8

KUNZMAN ASSOCIATES, INC.

Source: City of Loma Linda

OVER 35 YEARS OF EXCELLENT SERVICE

III. Project Traffic

A. Project Description

LLUAHSC, doing business as LLUH, is proposing the renovation of its campus referred to as the "LLUH Campus Transformation Project. The LLUH Campus Transformation Project is a Master Plan that consists of a multi-phased development to construct new facilities and improvements to the existing campus facilities in order to accommodate growth in the services provided, and to meet regulatory requirements. The proposed project would provide construction of new facilities, modernization of existing facilities, and replacement of the 1967 portion hospital structure in response to California's SB 1953 Hospital Seismic Safety Act mandate. The existing campus and all improvements proposed as part of the Master Plan are in the City of Loma Linda; the City is the Lead Agency for CEQA purposes. It is anticipated that the Master Plan would be built out in phases over a 10-year period.

Proposed facilities and improvements associated with the Master Plan include: 1) a six-story, approximate 250,000 square-foot, 760-space patient and visitor parking structure; 2) a twelve-story, approximate 732,000 square-foot hospital with 464 beds and 80 parking spaces; 3) an approximate 50,000 square-foot central utility plant; 4) an approximate 14,000 square-foot Southern California Edison (SCE) off-site electrical substation; 5) two-story, approximate 9,000 square-foot addition to the existing dental school; 6) a four-story approximate 90,000 square-foot research building; and 7) tenant improvements and adaptive reuse of the vacated portions of the existing hospital.

The proposed new hospital would consist of acute care hospital space. The facility will have shared and support services located in the first three levels of a shared podium, with two bed towers above serving separate pediatric and adult populations. The new hospital would provide for the relocation and decommissioning of the existing acute care services in seismically non-compliant structures. The new building would include approximately 464 patient beds, new Pediatric and Adult Emergency Departments, Perioperative Suites, Imaging Departments, and other support service departments. The total licensed capacity of the Medical Center would decrease from the current license of 719 beds to a total of approximately 650 beds. Upon completion of the new building and surrounding site, all inpatient functions will transfer to the new adjacent location.

The new parking structure would be located on the northeast corner of Barton Road and Campus Street. The 1.9-acre site is currently developed with 83 surface parking spaces. Improvements would include a new access point on Barton Road and removal of the 83 surface parking spaces. The new hospital would be located on an 11.2-acre site located on Anderson Street between Barton Road and Prospect Avenue that is developed with the existing hospital. The site is currently developed with 550 surface parking spaces. Improvements at the site would include two new access points on Barton Road and two new road alignments on Anderson Street at Prospect Avenue and Starr Street. The new central utility plant would be located on Anderson Street between Stewart Street and Union Pacific railroad line. The site is also currently developed with 40 surface parking spaces and a 10,000 square-foot office building, which would be demolished to allow for construction

of the central utility plant. A new SCE electrical substation would be needed to serve the Proposed Project and would be located on a 1.3-acre site located on Anderson Street just north of the Union Pacific Railroad line.

The 8,900 square foot dental school addition would occur on a 0.5-acre site located on the north side of the existing School of Dentistry (Prince Hall) located at 11029 University Avenue. Approximately 3,000 square feet of the existing building will need to be remodeled to accommodate the addition. The addition will be designed to complement the existing architecture and fit appropriately up to the cul-de-sac.

A new 90,000 square-foot research facility is proposed on or near the 1.9-acre site of Risley Hall, an existing laboratory and classroom building. The new facility will provide expanded laboratory and research office space as well as space for new high-tech research modalities to allow for increased interdisciplinary research. The facility is planned to be a three to four-story structural steel building approximately 50 feet in height.

B. Trip Generation

The trips generated by the project are determined by multiplying an appropriate trip generation rate by the quantity of land use. Trip generation rates are based on the assumption that energy costs, the availability of roadway capacity, the availability of vehicles to drive, and our life styles remain similar to what we know today. A major change in these variables may affect trip generation rates.

Trip generation rates were determined for daily traffic and morning peak hour inbound and outbound traffic, and evening peak hour inbound and outbound traffic for the proposed land use. By multiplying the trip generation rates by the land use quantity, the traffic volumes are determined. Table 3 shows the project trip generation based upon rates obtained from the Institute of Transportation Engineers, Trip Generation, 9th Edition, 2012.

As shown in Table 3, the current development (719 beds) is projected to generate approximately 9,505 daily vehicle trips, 683 of which will occur during the morning peak hour and 669 of which will occur during the evening peak hour.

As shown in Table 3, the proposed development (650 beds) is projected to generate approximately 8,593 daily vehicle trips, 618 of which will occur during the morning peak hour and 605 of which will occur during the evening peak hour.

The proposed development compared to the current development is projected to generate approximately 912 less daily vehicle trips, 65 less of which will occur during the morning peak hour and 64 less of which will occur during the evening peak hour.

However, in order to provide a “conservative” analysis, the project traffic volumes have not been reduced in the report for analysis purposes.

C. Project Traffic Contribution Test

No analysis is required further than 5 miles from the project site. The roadway elements that must be analyzed are dependent on both the analysis year (Opening Year) and project generated traffic volumes. The identification of the study area, and the intersections and highway segments requiring analysis, was based on an estimate of the two-way traffic volumes on the roadway segments near the project site. All arterial segments are required to be included in the analysis when the anticipated project volume equals or exceeds 50 two-way trips in the peak hours. The requirement is 100 two-way peak hour trips for freeways.

The project does not contribute additional traffic greater than the freeway threshold volume of 100 two-way peak hour trips to a Freeway. The project does not contribute additional traffic greater than the arterial link threshold volume of 50 two-way trips in the peak hours on facilities serving intersections in the City of Loma Linda.

Table 3

Project Trip Generation[1]

Land Use	Quantity	Units	Peak Hour						Daily
			Morning			Evening			
			Inbound	Outbound	Total	Inbound	Outbound	Total	
Trip Generation Rates									
Hospital		Bed	0.60	0.35	0.95	0.35	0.58	0.93	13.22
Trips Generated[2]									
Existing Hospital	719	Bed	431	252	683	252	417	669	9,505
Proposed Hospital	650	Bed	390	228	618	228	377	605	8,593
Difference			-41	-24	-65	-24	-40	-64	-912

[1] Source: Institute of Transportation Engineers, Trip Generation, 9th Edition, 2012, Land Use Category 610.

[2] The traffic analysis accounts for the redistribution of traffic volumes with the construction of the new parking areas and access points. It should be noted that the central utility plant and electrical substation are accounted for with the areawide growth projection of future traffic volumes. The dental school addition and research building trip generation are based upon the number of students at the Loma Linda University and no new students have been proposed. The tenant improvements and adaptive reuse of the vacated portions of the existing hospital building trip generation are based upon the number of beds and a net reduction in beds has been proposed.

IV. Future Conditions

A. Future Volumes

As described within Section I.C., the Opening Year traffic projections have been interpolated between Year 2035 traffic volumes and existing traffic volumes utilizing a portion of the growth increment.

1. Opening Year (2013) Without Project

   The average daily traffic volumes for Opening Year (2013) without project traffic conditions have been determined as described above using the growth interpolation process (see Section I.C). Opening Year (2013) without project average daily traffic volumes are shown on Figure 9.

2. Opening Year (2013) With Project

   The average daily traffic volumes for Opening Year (2013) with project traffic conditions have been determined as described above using the volume addition process (see Section I.C). Opening Year (2013) with project average daily traffic volumes are shown on Figure 10.

3. Opening Year (2023) Without Project

   The average daily traffic volumes for Opening Year (2023) without project traffic conditions have been determined as described above using the growth interpolation process (see Section I.C). Opening Year (2023) without project average daily traffic volumes are shown on Figure 11.

4. Opening Year (2023) With Project

   The average daily traffic volumes for Opening Year (2023) with project traffic conditions have been determined as described above using the volume addition process (see Section I.C). Opening Year (2023) with project average daily traffic volumes are shown on Figure 12.

B. Future Level of Service

1. Opening Year (2013) Without Project

   The Opening Year (2013) delay and Level of Service for the study area roadway network without the proposed project are shown in Table 4. Table 4 shows delay values based on the existing geometrics at the study area intersections. Opening Year (2013) Without Project delay calculation worksheets are provided in Appendix D. Opening Year (2013) Without Project morning and evening peak hour intersection turning movement volumes are shown on Figures 13 and 14, respectively.

For Opening Year (2013) Without Project traffic conditions, the following study area intersections are projected to operate at unacceptable Levels of Service during the peak hours, without improvements:

Campus Street (NS) at:
- Stewart Street (EW) - #1
- Barton Road EW) #5

Anderson Street (NS) at:
- Barton Road (EW) - #14

3. Opening Year (2013) With Project

The Opening Year (2013) delay and Level of Service for the study area roadway network with the proposed project are shown in Table 5. Table 5 shows delay values based on the geometrics at the study area intersections, without and with improvements. Opening Year (2013) With Project delay calculation worksheets are provided in Appendix D. Opening Year (2013) With Project morning and evening peak hour intersection turning movement volumes are shown on Figures 15 and 16, respectively.

For Opening Year (2013) With Project traffic conditions, the following study area intersections are projected to operate at unacceptable Levels of Service during the peak hours, without improvements:

Campus Street (NS) at:
- Stewart Street (EW) - #1
- University Avenue (EW) - #2
- Barton Road EW) #5

Anderson Street (NS) at:
- Barton Road (EW) - #14

As shown in Table 5, the study area intersections are projected to operate at acceptable Levels of Service during the peak hours for Opening Year (2013) With Project traffic conditions, with improvements.

1. Opening Year (2023) Without Project

The Opening Year (2023) delay and Level of Service for the study area roadway network without the proposed project are shown in Table 6. Table 6 shows delay values based on the existing geometrics at the study area intersections. Opening Year (2023) Without Project delay calculation worksheets are provided in Appendix D. Opening Year (2023) Without Project morning and evening peak hour intersection turning movement volumes are shown on Figures 17 and 18, respectively.

For Opening Year (2023) Without Project traffic conditions, the following study area intersections are projected to operate at unacceptable Levels of Service during the peak hours, without improvements:

Campus Street (NS) at:
- Stewart Street (EW) - #1
- University Avenue (EW) - #2
- San Juan Street (EW) - #4
- Barton Road EW) #5

Anderson Street (NS) at:
- Mound Street (EW) - #9
- Prospect Avenue (EW) - #11
- Main Project Access (EW) - #12
- Barton Road (EW) - #14

3. Opening Year (2023) With Project

The Opening Year (2023) delay and Level of Service for the study area roadway network with the proposed project are shown in Table 7. Table 7 shows delay values based on the geometrics at the study area intersections, without and with improvements. Opening Year (2023) With Project delay calculation worksheets are provided in Appendix D. Opening Year (2023) With Project morning and evening peak hour intersection turning movement volumes are shown on Figures 19 and 20, respectively.

For Opening Year (2023) With Project traffic conditions, the following study area intersections are projected to operate at unacceptable Levels of Service during the peak hours, without improvements:

Campus Street (NS) at:
- Stewart Street (EW) - #1
- University Avenue (EW) - #2
- San Juan Street (EW) - #4
- Barton Road EW) #5

Anderson Street (NS) at:
- Mound Street (EW) - #9
- Prospect Avenue (EW) - #11
- Barton Road (EW) - #14

As shown in Table 7, the study area intersections are projected to operate at acceptable Levels of Service during the peak hours for Opening Year (2023) With Project traffic conditions, with improvements.

C. Future Traffic Signal Warrant Analysis

A traffic signal is projected to be warranted at the following additional study area intersection for Opening Year (2013) Without Project traffic conditions (see Appendix E):

Anderson Street (NS) at:
Prospect Avenue (EW) - #11

A traffic signal is projected to be warranted at the following additional study area intersection for Opening Year (2013) With Project traffic conditions (see Appendix E):

Campus Street (NS) at:
University Avenue (EW) - #2

A traffic signal is projected to be warranted at the following additional study area intersection for Opening Year (2023) Without Project traffic conditions (see Appendix E):

Anderson Street (NS) at:
Mound Street (EW) - #9

The unsignalized intersections have been evaluated for traffic signals using the California Department of Transportation Warrant 3 Peak Hour traffic signal warrant analysis, as specified in the Manual of Uniform Traffic Control Devices 2003 California Supplement, dated May 20, 2004.

D. Congestion Management Program Freeway Evaluation

An analysis of Year 2035 freeway level of service is required for all freeway segments that carry 100 or more project trips in the peak hour. The project does not contribute additional traffic greater than the freeway threshold volume of 100 two-way peak hour trips to a Freeway.

Table 4

Opening Year (2013) Without Project Intersection Delay and Level of Service

Intersection	Traffic Control[3]	Intersection Approach Lanes[1]												Peak Hour Delay-LOS[2]	
		Northbound			Southbound			Eastbound			Westbound				
		L	T	R	L	T	R	L	T	R	L	T	R	Morning	Evening
Campus Street (NS) at:															
Stewart Street (EW) - #1	AWS	0.5	0.5	1	0	1	0	0	1	0	0.5	0.5	1	25.7-D	18.6-C
University Avenue (EW) - #2	AWS	0	1	0	0	1	0	0	1	0	0	0	0	19.5-C	13.2-B
Prospect Avenue (EW) - #3	TS	1	1	0	0	1	1	0	1	0	0	0	0	6.1-A	9.0-A
San Juan Street (EW) - #4	CSS	0	1	0	0	2	0	0	1	0	0	0	0	16.7-C	12.0-B
Barton Road (EW) - #5	TS	1	0.5	0.5	1	1	1	1	2	1	1	2	1	42.6-D	45.0-D
Parkland Street (NS) at:															
Stewart Street (EW) - #6	CSS	0	0	0	0	1	0	0	1	0	0	1	0	10.8-B	12.3-B
Anderson Street (NS) at:															
Stewart Street (EW) - #7	TS	1	2	d	1	2	d	1	0.5	0.5	1	0.5	0.5	20.8-C	16.6-B
University Avenue (EW) - #8	TS	1	2	0	0	2	1	1	0	1	0	0	0	6.6-A	7.7-A
Mound Street (EW) - #9	AWS	1.5	0.5	1	0	1	0	1	0.5	1.5	0	1	0	13.0-B	15.1-C
Taylor Street (EW) - #10	CSS	1	2	0	0	1.5	0.5	0	0	0	0	0	0	9.4-A	8.6-A
Prospect Avenue (EW) - #11	AWS	0	1.5	0.5	1	2	0	0	1	0	0.5	0	0.5	17.9-C	21.7-C
Main Project Access (EW) - #12	CSS	1	2	0	0	1.5	0.5	1	0	1	0	0	0	15.7-C	19.2-C
Starr Street (EW) - #13	CSS	0	1.5	0.5	1	2	0	0	0	0	0	1	0	13.4-B	13.7-B
Barton Road (EW) - #14	TS	1	0.5	0.5	1	1	1	2	2	1	1	2	1	41.6-D	38.0-D

[1] When a right turn lane is designated, the lane can either be striped or unstriped. To function as a right turn lane there must be sufficient width for right turning vehicles to travel outside the through lanes.
L = Left; T = Through; R = Right; d = Defacto Right Turn

[2] Delay and level of service has been calculated using the following analysis software: Traffix, Version 7.9.0215 (2008). Per the 2000 Highway Capacity Manual, overall average intersection delay and level of service are shown for intersections with traffic signal or all way stop control, the delay and level of service for the worst individual movement (or movements sharing a single lane) are shown.

[3] AWS = All Way Stop; TS = Traffic Signal; CSS = Cross Street Stop

Table 5

Opening Year (2013) With Project Intersection Delay and Level of Service

Intersection	Traffic Control[3]	Intersection Approach Lanes[1]												Peak Hour Delay-LOS[2]	
		Northbound			Southbound			Eastbound			Westbound				
		L	T	R	L	T	R	L	T	R	L	T	R	Morning	Evening
Campus Street (NS) at:															
Stewart Street (EW) - #1															
- Without Improvements	AWS	0.5	0.5	1	0	1	0	0	1	0	0.5	0.5	1	37.8-E	21.7-C
- With Improvements	**TS**	0.5	0.5	1	0	1	0	0	1	0	0.5	0.5	1	10.8-B	10.3-B
University Avenue (EW) - #2															
- Without Improvements	AWS	0	1	0	0	1	0	0	1	0	0	0	0	25.2-D	14.8-B
- With Improvements	**TS**	0	1	0	0	1	0	0	1	0	0	0	0	10.8-B	8.1-A
Prospect Avenue (EW) - #3	TS	1	1	0	0	1	1	0	1	0	0	0	0	6.1-A	8.6-A
San Juan Street (EW) - #4	CSS	0	1	0	0	2	0	0	1	0	0	0	0	18.9-C	12.6-B
Barton Road (EW) - #5															
- Without Improvements	TS	1	0.5	0.5	1	1	1	1	2	1	1	2	1	46.6-D	50.8-D
- With Improvements	TS	1	0.5	0.5	**1.5**	0.5	1	1	2	1	1	2	1**>**	35.9-D	36.9-D
Parkland Street (NS) at:															
Stewart Street (EW) - #6	CSS	0	0	0	0	1	0	0	1	0	0	1	0	10.8-B	12.3-B
Anderson Street (NS) at:															
Stewart Street (EW) - #7	TS	1	2	d	1	2	d	1	0.5	0.5	1	0.5	0.5	21.6-C	16.4-B
University Avenue (EW) - #8	TS	1	2	0	0	2	1	1	0	1	0	0	0	6.3-A	7.3-A
Mound Street (EW) - #9	AWS	1.5	0.5	1	0	1	0	1	0.5	1.5	0	1	0	18.0-C	16.7-C
Taylor Street (EW) - #10	CSS	1	2	0	0	1.5	0.5	0	0	0	0	0	0	9.1-A	8.5-A
Prospect Avenue (EW) - #11															
- Without Improvements	AWS	0	1.5	0.5	1	2	0	0	1	0	0.5	0	0.5	15.4-C	17.8-C
- With Improvements	**TS**	0	1.5	0.5	1	2	0	0	1	0	0.5	0	0.5	15.5-B	14.0-B
Main Project Access (EW) - #12	CSS	1	2	0	0	1.5	0.5	1	0	1	0	0	0	13.7-B	15.7-C
Starr Street (EW) - #13	CSS	0	1.5	0.5	1	2	0	0	0	0	0	1	0	12.6-B	13.1-B
Barton Road (EW) - #14	TS	1	0.5	0.5	1	1	1	2	2	1	1	2	1	42.4-D	38.5-D

[1] When a right turn lane is designated, the lane can either be striped or unstriped. To function as a right turn lane there must be sufficient width for right turning vehicles to travel outside the through lanes.

L = Left; T = Through; R = Right; d = Defacto Right Turn; > = Right Turn Overlap; **1** = Improvements

[2] Delay and level of service has been calculated using the following analysis software: Traffix, Version 7.9.0215 (2008). Per the 2000 Highway Capacity Manual, overall average intersection delay and level of service are shown for intersections with traffic signal or all way stop control, the delay and level of service for the worst individual movement (or movements sharing a single lane) are shown.

[3] AWS = All Way Stop; TS = Traffic Signal; CSS = Cross Street Stop

Table 6

Opening Year (2023) Without Project Intersection Delay and Level of Service

Intersection	Traffic Control[3]	Intersection Approach Lanes[1]												Peak Hour Delay-LOS[2]	
		Northbound			Southbound			Eastbound			Westbound				
		L	T	R	L	T	R	L	T	R	L	T	R	Morning	Evening
Campus Street (NS) at:															
Stewart Street (EW) - #1	AWS	0.5	0.5	1	0	1	0	0	1	0	0.5	0.5	1	37.7-E	30.8-D
University Avenue (EW) - #2	AWS	0	1	0	0	1	0	0	1	0	0	0	0	29.6-D	15.0-B
Prospect Avenue (EW) - #3	TS	1	1	0	0	1	1	0	1	0	0	0	0	5.9-A	9.0-A
San Juan Street (EW) - #4	CSS	0	1	0	0	2	0	0	1	0	0	0	0	219.2-F	34.6-D
Barton Road (EW) - #5	TS	1	0.5	0.5	1	1	1	1	2	1	1	2	1	50.0-D	50.0-D
Parkland Street (NS) at:															
Stewart Street (EW) - #6	CSS	0	0	0	0	1	0	0	1	0	0	1	0	11.5-B	13.9-B
Anderson Street (NS) at:															
Stewart Street (EW) - #7	TS	1	2	d	1	2	d	1	0.5	0.5	1	0.5	0.5	22.5-C	18.5-B
University Avenue (EW) - #8	TS	1	2	0	0	2	1	1	0	1	0	0	0	6.9-A	7.4-A
Mound Street (EW) - #9	AWS	1.5	0.5	1	0	1	0	1	0.5	1.5	0	1	0	21.2-C	29.3-D
Taylor Street (EW) - #10	CSS	1	2	0	0	1.5	0.5	0	0	0	0	0	0	11.1-B	9.4-A
Prospect Avenue (EW) - #11	AWS	0	1.5	0.5	1	2	0	0	1	0	0.5	0	0.5	39.4-E	97.8-F
Main Project Access (EW) - #12	CSS	1	2	0	0	1.5	0.5	1	0	1	0	0	0	25.9-D	52.4-F
Starr Street (EW) - #13	CSS	0	1.5	0.5	1	2	0	0	0	0	0	1	0	13.7-B	15.1-C
Barton Road (EW) - #14	TS	1	0.5	0.5	1	1	1	2	2	1	1	2	1	44.7-D	41.2-D

[1] When a right turn lane is designated, the lane can either be striped or unstriped. To function as a right turn lane there must be sufficient width for right turning vehicles to travel outside the through lanes.

L = Left; T = Through; R = Right; d = Defacto Right Turn; > = Right Turn Overlap

[2] Delay and level of service has been calculated using the following analysis software: Traffix, Version 7.9.0215 (2008). Per the 2000 Highway Capacity Manual, overall average intersection delay and level of service are shown for intersections with traffic signal or all way stop control, the delay and level of service for the worst individual movement (or movements sharing a single lane) are shown.

[3] AWS = All Way Stop; TS = Traffic Signal; CSS = Cross Street Stop

Table 7

Opening Year (2023) With Project Intersection Delay and Level of Service

Intersection	Traffic Control[3]	Intersection Approach Lanes[1]												Peak Hour Delay-LOS[2]	
		Northbound			Southbound			Eastbound			Westbound				
		L	T	R	L	T	R	L	T	R	L	T	R	Morning	Evening
Campus Street (NS) at:															
Stewart Street (EW) - #1															
- Without Improvements	AWS	0.5	0.5	1	0	1	0	0	1	0	0.5	0.5	1	106.1-F	81.2-F
- With Improvements	**TS**	0.5	0.5	1	0	1	0	0	1	0	0.5	0.5	1	11.9-B	12.1-B
University Avenue (EW) - #2															
- Without Improvements	AWS	0	1	0	0	1	0	0	1	0	0	0	0	96.3-F	35.3-E
- With Improvements	**TS**	0	1	0	0	1	0	0	1	0	0	0	0	13.2-B	8.4-A
Prospect Avenue (EW) - #3	TS	1	1	0	0	1	1	0	1	0	0	0	0	9.3-A	8.2-A
San Juan Street (EW) - #4															
- Without Improvements	CSS	0	1	0	0	2	0	0	1	0	0	0	0	439.7-F	65.5-F
- With Improvements	CSS	0	1	0	0	2	0	0	0	**1**	0	0	0	10.5-B	13.7-B
Barton Road (EW) - #5															
- Without Improvements	TS	1	0.5	0.5	1	1	1	1	2	1	1	2	1	99.9-F[4]	99.9-F
- With Improvements	TS	1	0.5	0.5	**1.5**	0.5	1	1	2	1	1	2	1**>**	44.6-D	45.7-D
Parkland Street (NS) at:															
Stewart Street (EW) - #6	CSS	0	0	0	0	1	0	0	1	0	0	1	0	11.5-B	13.9-B
Anderson Street (NS) at:															
Stewart Street (EW) - #7	TS	1	2	d	1	2	d	1	0.5	0.5	1	0.5	0.5	25.3-C	17.9-B
University Avenue (EW) - #8	TS	1	2	0	0	2	1	1	0	1	0	0	0	6.4-A	7.1-A
Mound Street (EW) - #9															
- Without Improvements	AWS	1.5	0.5	1	0	1	0	1	0.5	1.5	0	1	0	31.3-D	23.9-C
- With Improvements	**TS**	1.5	0.5	1	0	1	0	1	1	1**>**	0	1	0	20.8-C	20.5-C
Taylor Street (EW) - #10	CSS	1	2	0	0	1.5	0.5	0	0	0	0	0	0	9.8-A	8.9-A
Prospect Avenue (EW) - #11															
- Without Improvements	AWS	0	1.5	0.5	1	2	0	0	1	0	0.5	0	0.5	24.5-C	70.0-F
- With Improvements	**TS**	0	1.5	0.5	1	2	0	0	1	0	0.5	0	0.5	21.0-C	16.7-B
Starr Street (EW) - #13	CSS	**1**	1.5	0.5	1	1.5	0.5	0	**1**	0	0	1	0	14.2-B	17.5-C
Barton Road (EW) - #14	TS	1	0.5	0.5	1	1	1	2	2	1	1	2	1	48.6-D	42.0-D
Project Access (NS) at:															
Barton Road (EW) - #15	**CSS**	0	0	0	0	0	**1**	0	2	0	0	2	**d**	13.2-B	17.9-C

[1] When a right turn lane is designated, the lane can either be striped or unstriped. To function as a right turn lane there must be sufficient width for right turning vehicles to travel outside the through lanes.
L = Left; T = Through; R = Right; d = Defacto Right Turn; > = Right Turn Overlap; **1** = Improvements

[2] Delay and level of service has been calculated using the following analysis software: Traffix, Version 7.9.0215 (2008). Per the 2000 Highway Capacity Manual, overall average intersection delay and level of service are shown for intersections with traffic signal or all way stop control, the delay and level of service for the worst individual movement (or movements sharing a single lane) are shown.

[3] AWS = All Way Stop; TS = Traffic Signal; CSS = Cross Street Stop

[4] 99.9-F = Delay High, Intersection Unstable, Level of Service F.

Figure 9
Opening Year (2013) Without Project Average Daily Traffic Volumes

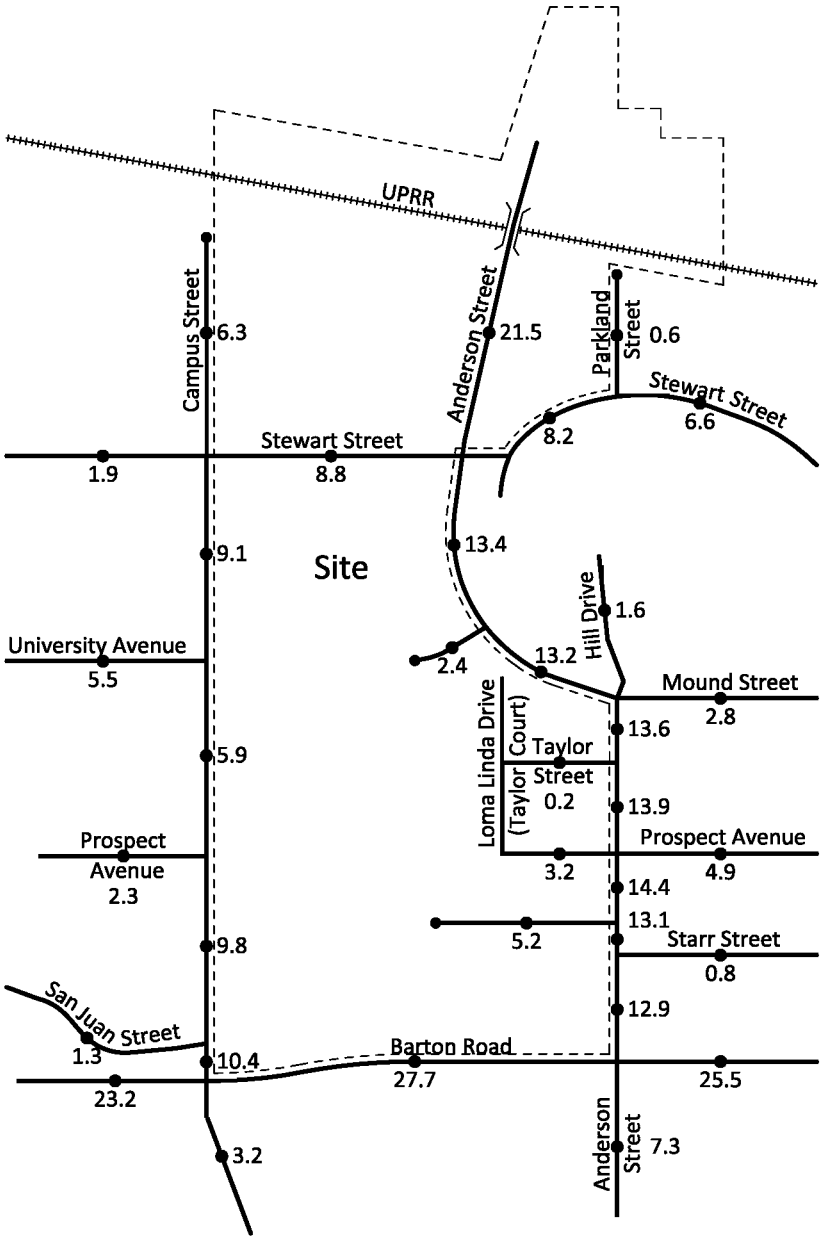

Legend

7.3 = Vehicles Per Day (1,000's)

N

NTS

5341/9

KUNZMAN ASSOCIATES, INC.

OVER 35 YEARS OF EXCELLENT SERVICE

Figure 10
Opening Year (2013) With Project Average Daily Traffic Volumes

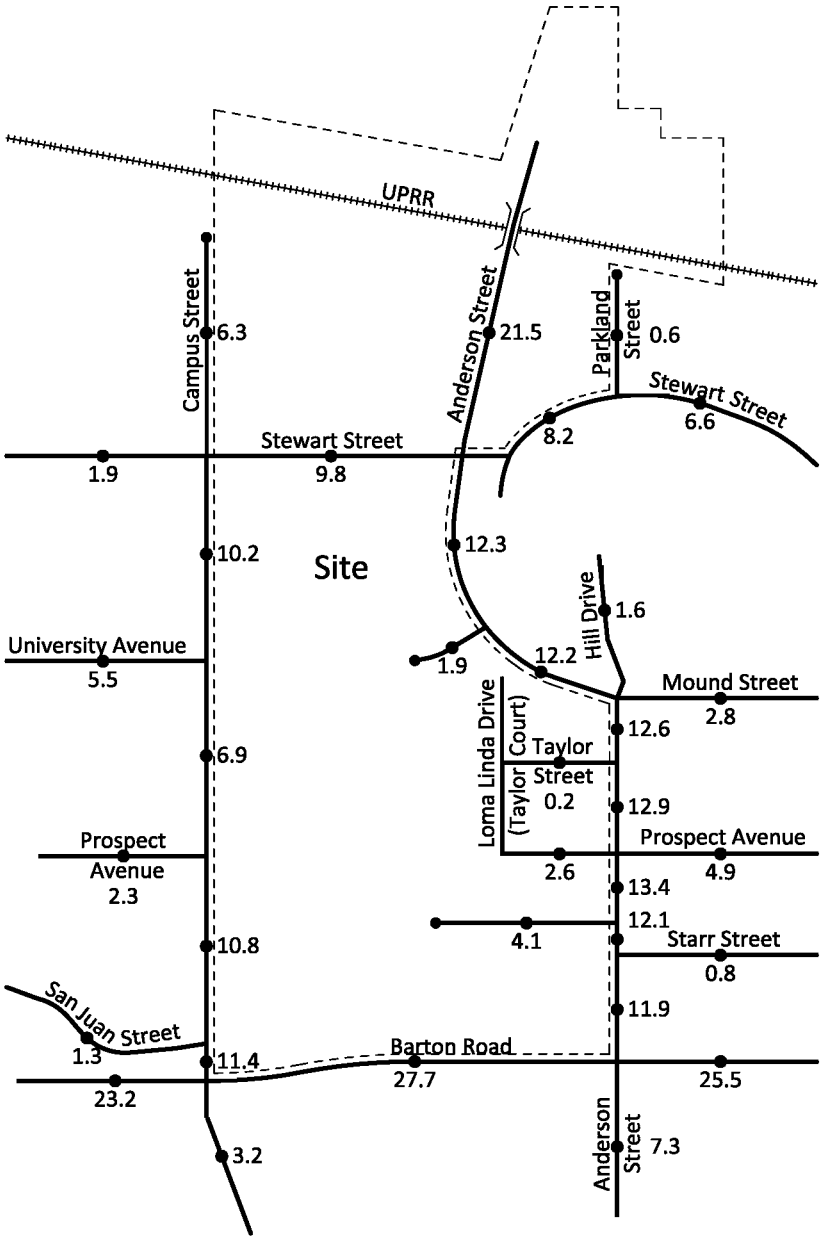

Legend

7.3 = Vehicles Per Day (1,000's)

N

NTS

5341/10

KUNZMAN ASSOCIATES, INC.

OVER 35 YEARS OF EXCELLENT SERVICE

Figure 11
Opening Year (2023) Without Project Average Daily Traffic Volumes

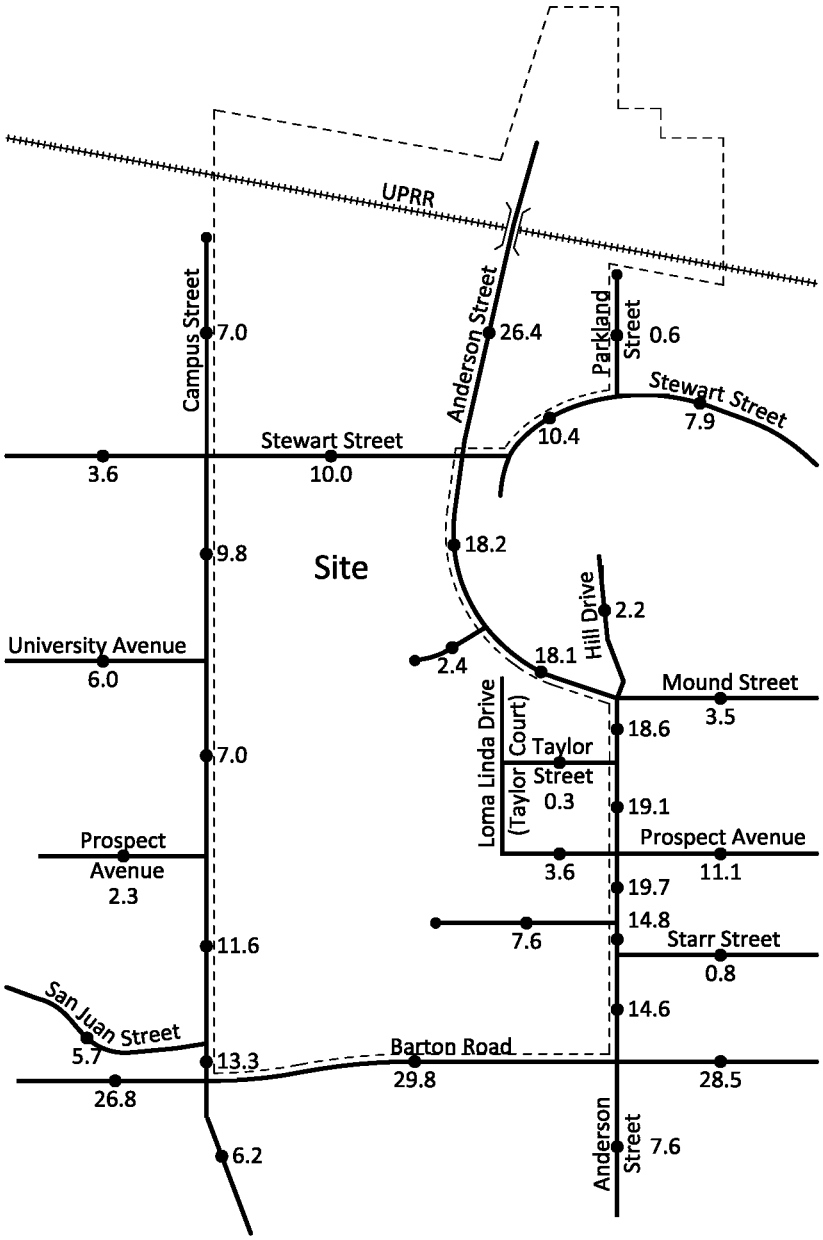

Legend

7.6 = Vehicles Per Day (1,000's)

N

NTS

5341/11

KUNZMAN ASSOCIATES, INC.

OVER 35 YEARS OF EXCELLENT SERVICE

Figure 12
Opening Year (2023) With Project Average Daily Traffic Volumes

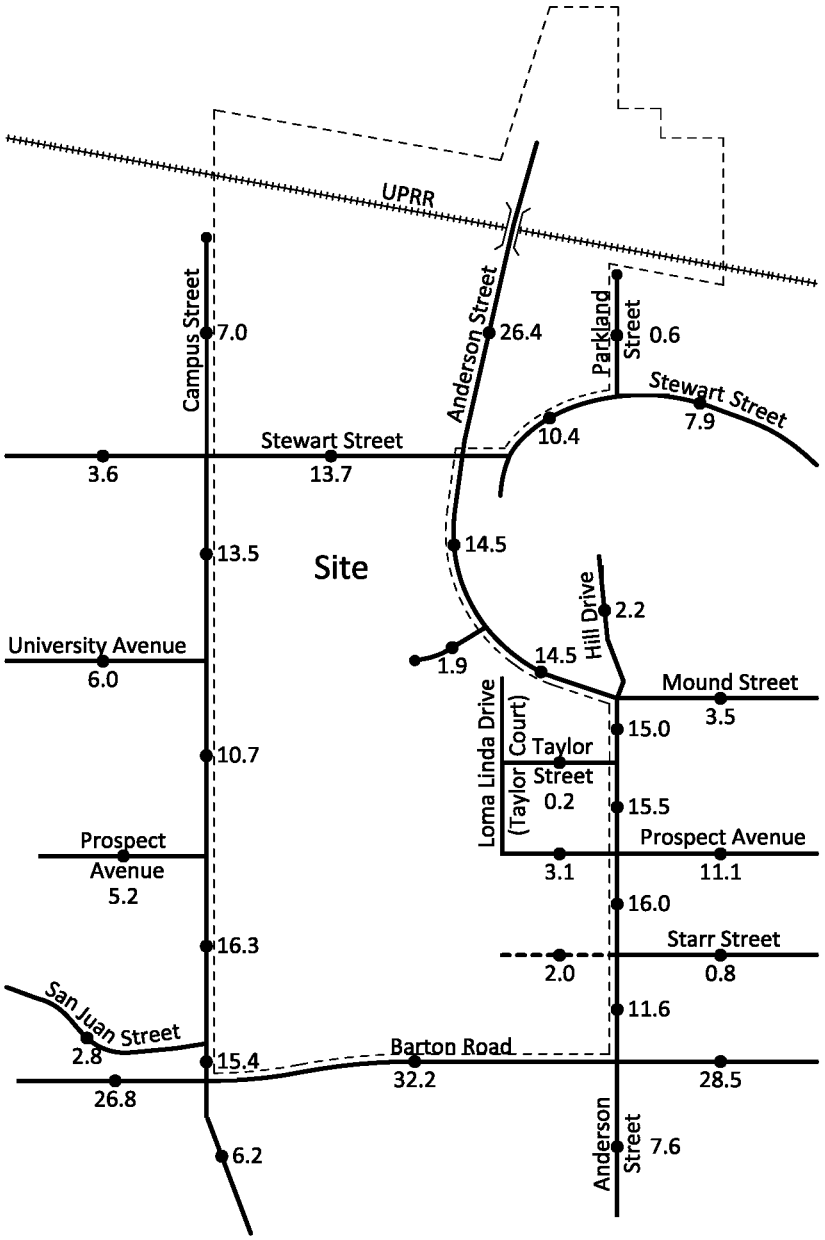

Legend

7.6 = Vehicles Per Day (1,000's)

N

NTS

5341/12

KUNZMAN ASSOCIATES, INC.

OVER 35 YEARS OF EXCELLENT SERVICE

Figure 13
Opening Year (2013) Without Project
Morning Peak Hour Intersection Turning Movement Volumes

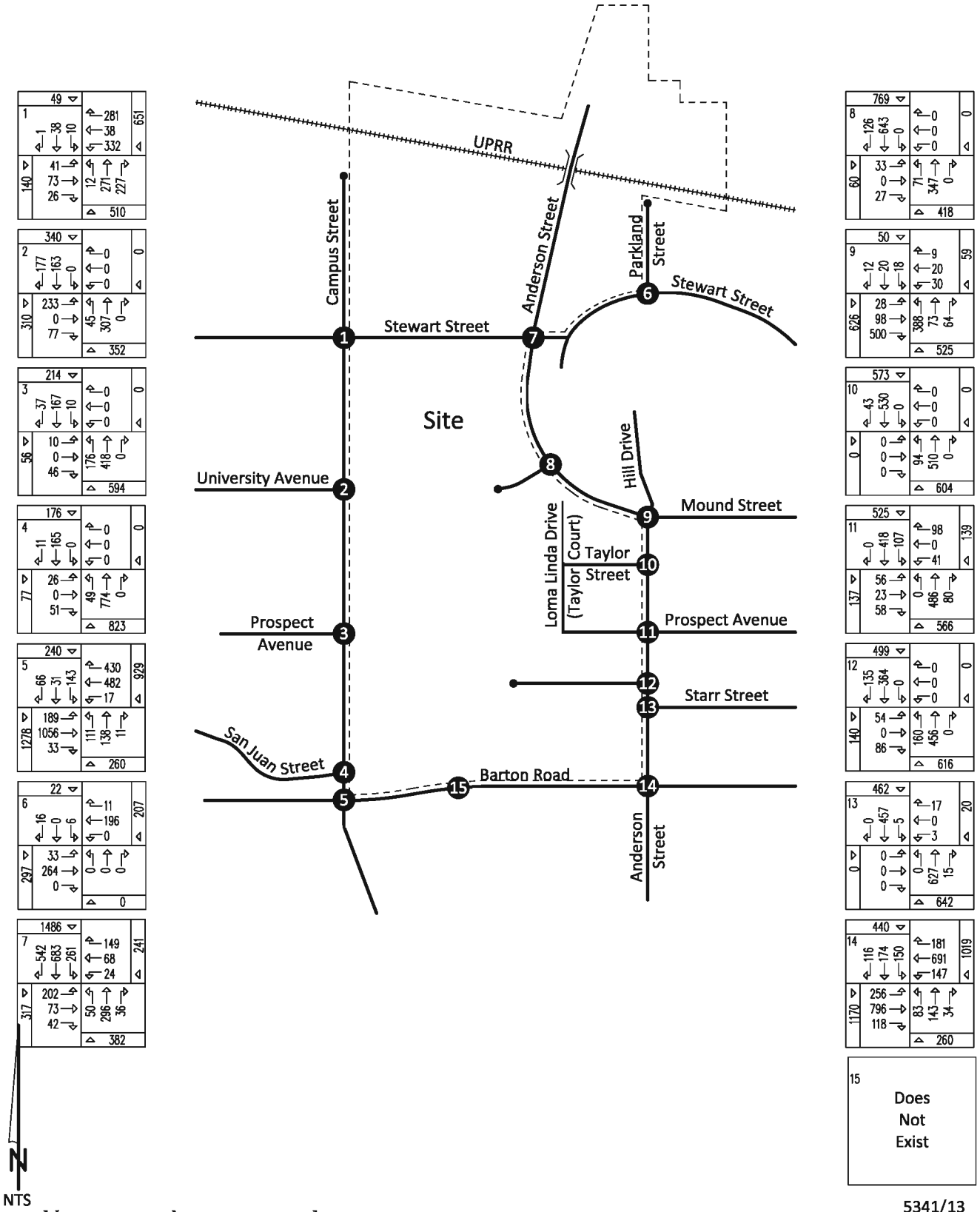

5341/13

KUNZMAN ASSOCIATES, INC. Intersection reference numbers are in upper left corner of turning movement boxes.

OVER 35 YEARS OF EXCELLENT SERVICE

Figure 14
Opening Year (2013) Without Project
Evening Peak Hour Intersection Turning Movement Volumes

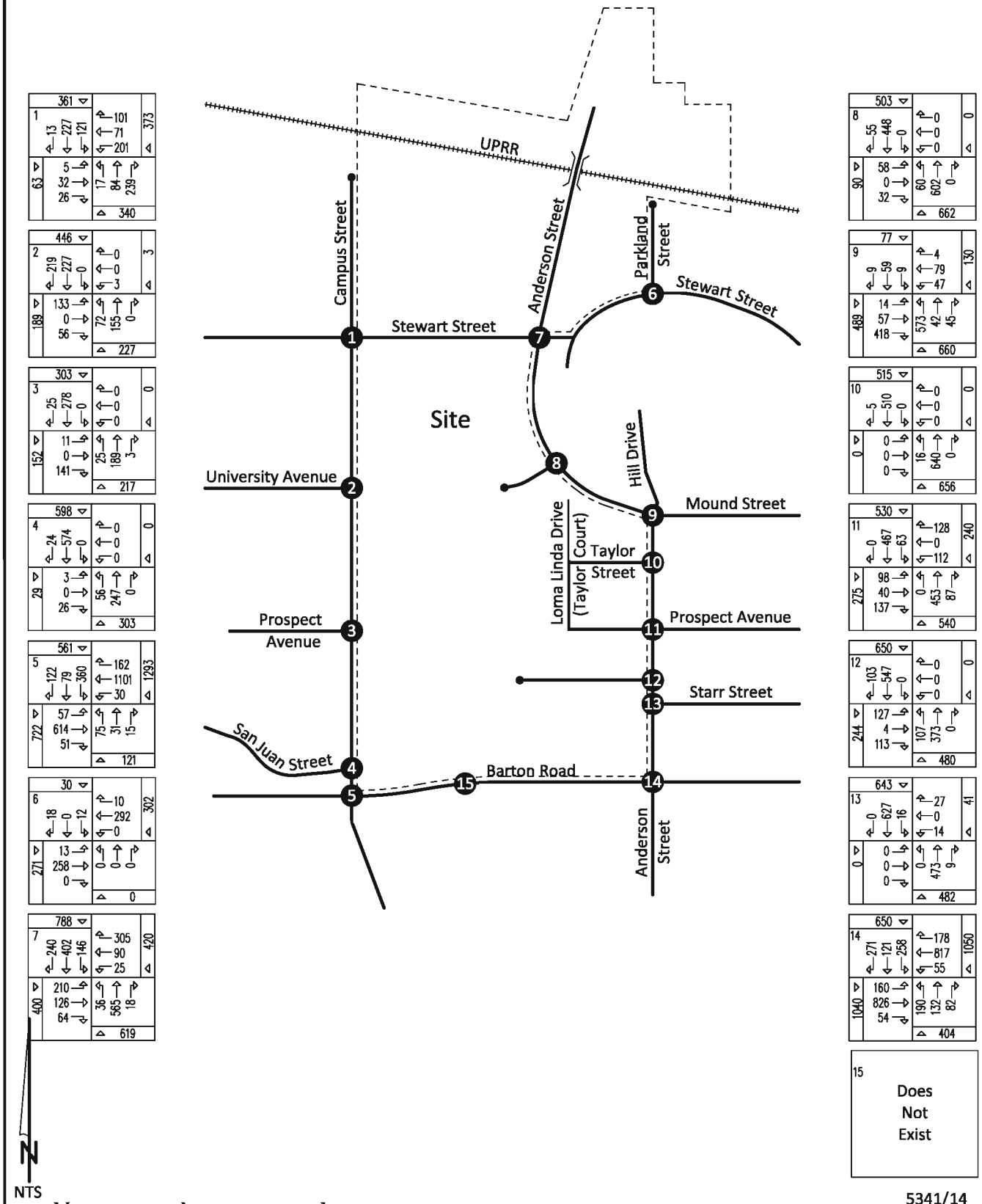

5341/14

KUNZMAN ASSOCIATES, INC. Intersection reference numbers are in upper left corner of turning movement boxes.

OVER 35 YEARS OF EXCELLENT SERVICE

Figure 15
Opening Year (2013) With Project
Morning Peak Hour Intersection Turning Movement Volumes

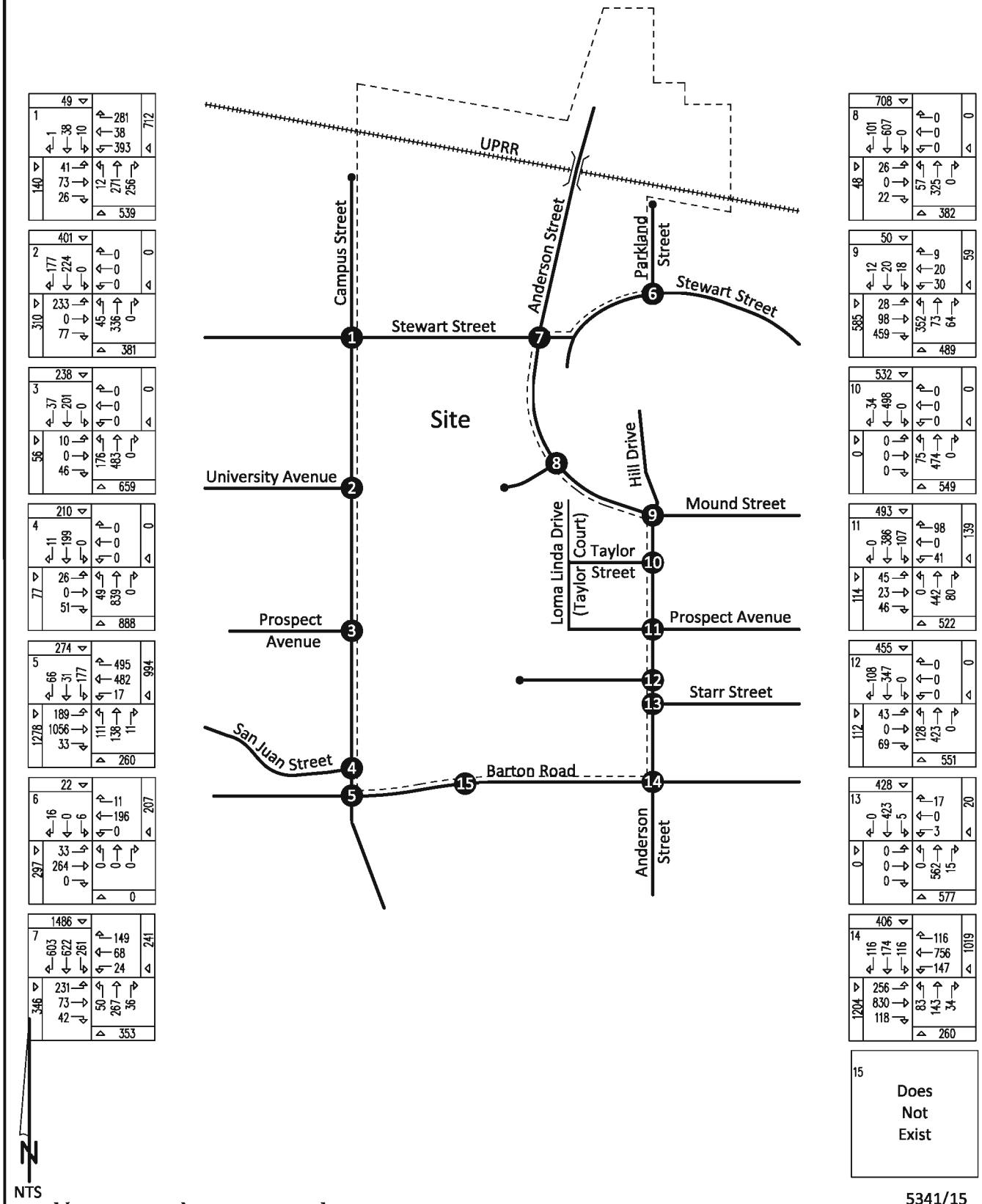

5341/15

KUNZMAN ASSOCIATES, INC. Intersection reference numbers are in upper left corner of turning movement boxes.

OVER 35 YEARS OF EXCELLENT SERVICE

Figure 16
Opening Year (2013) With Project
Evening Peak Hour Intersection Turning Movement Volumes

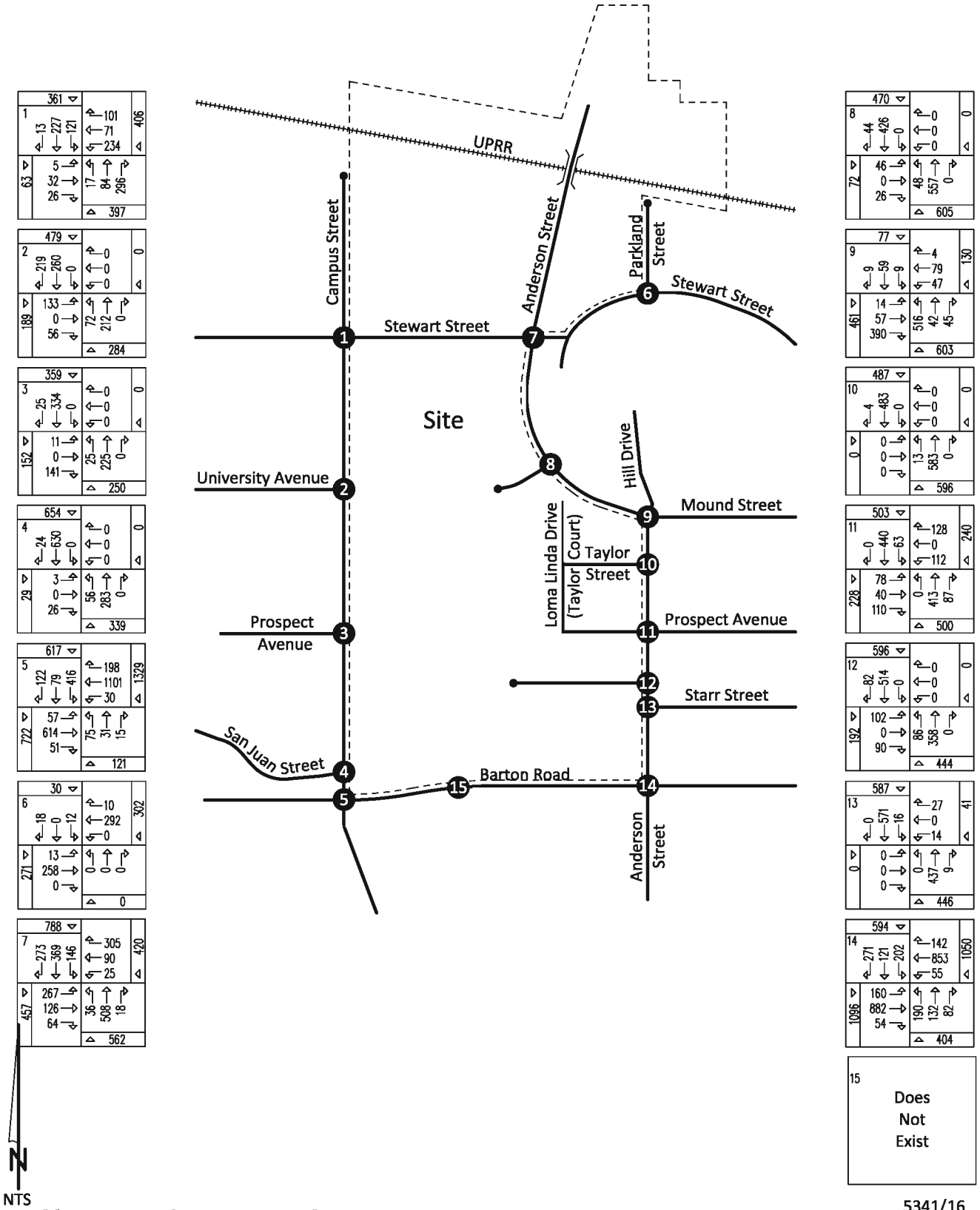

5341/16

KUNZMAN ASSOCIATES, INC. Intersection reference numbers are in upper left corner of turning movement boxes.

OVER 35 YEARS OF EXCELLENT SERVICE

Figure 17
Opening Year (2023) Without Project
Morning Peak Hour Intersection Turning Movement Volumes

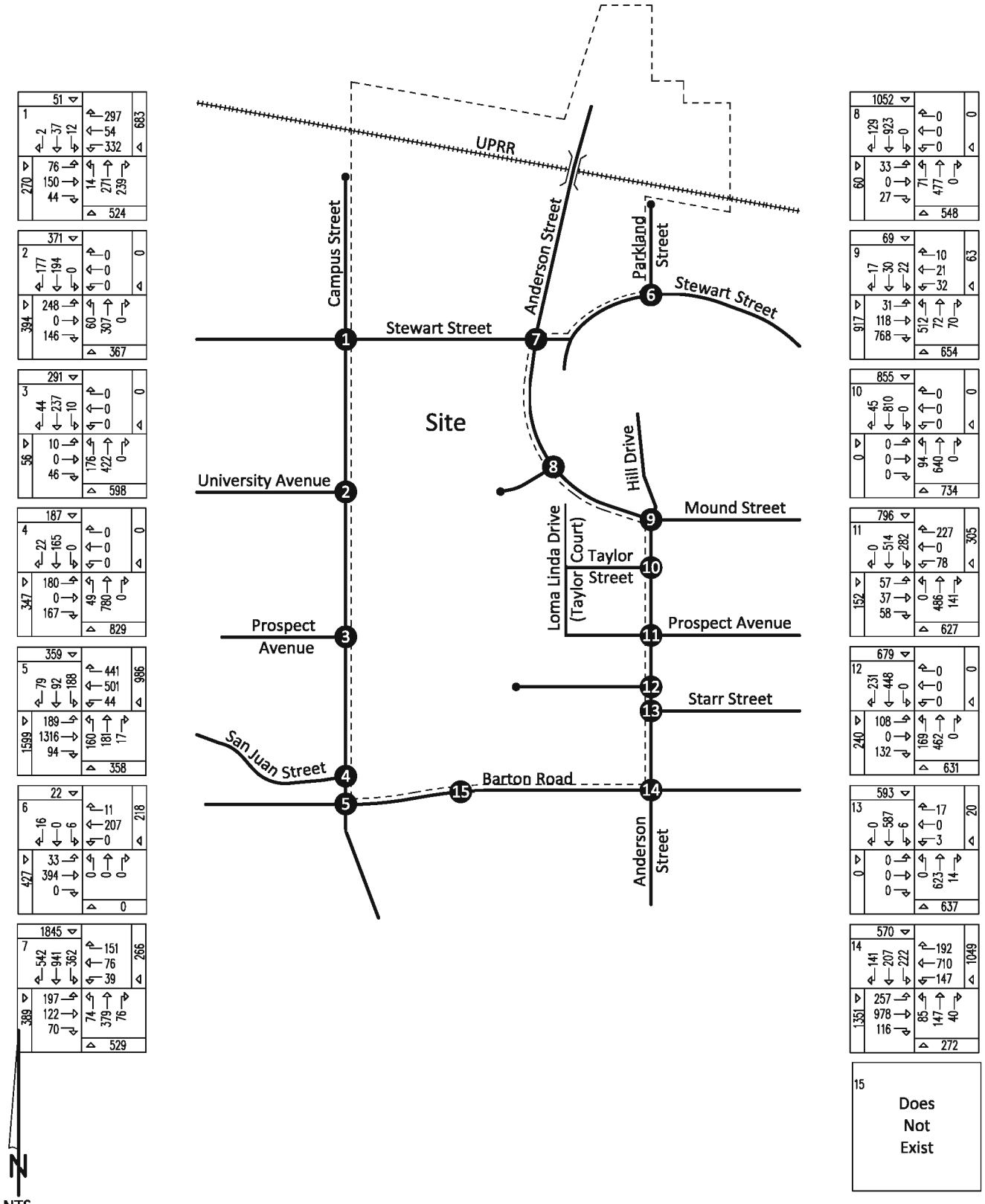

5341/17

KUNZMAN ASSOCIATES, INC. Intersection reference numbers are in upper left corner of turning movement boxes.

OVER 35 YEARS OF EXCELLENT SERVICE

Figure 18
Opening Year (2023) Without Project
Evening Peak Hour Intersection Turning Movement Volumes

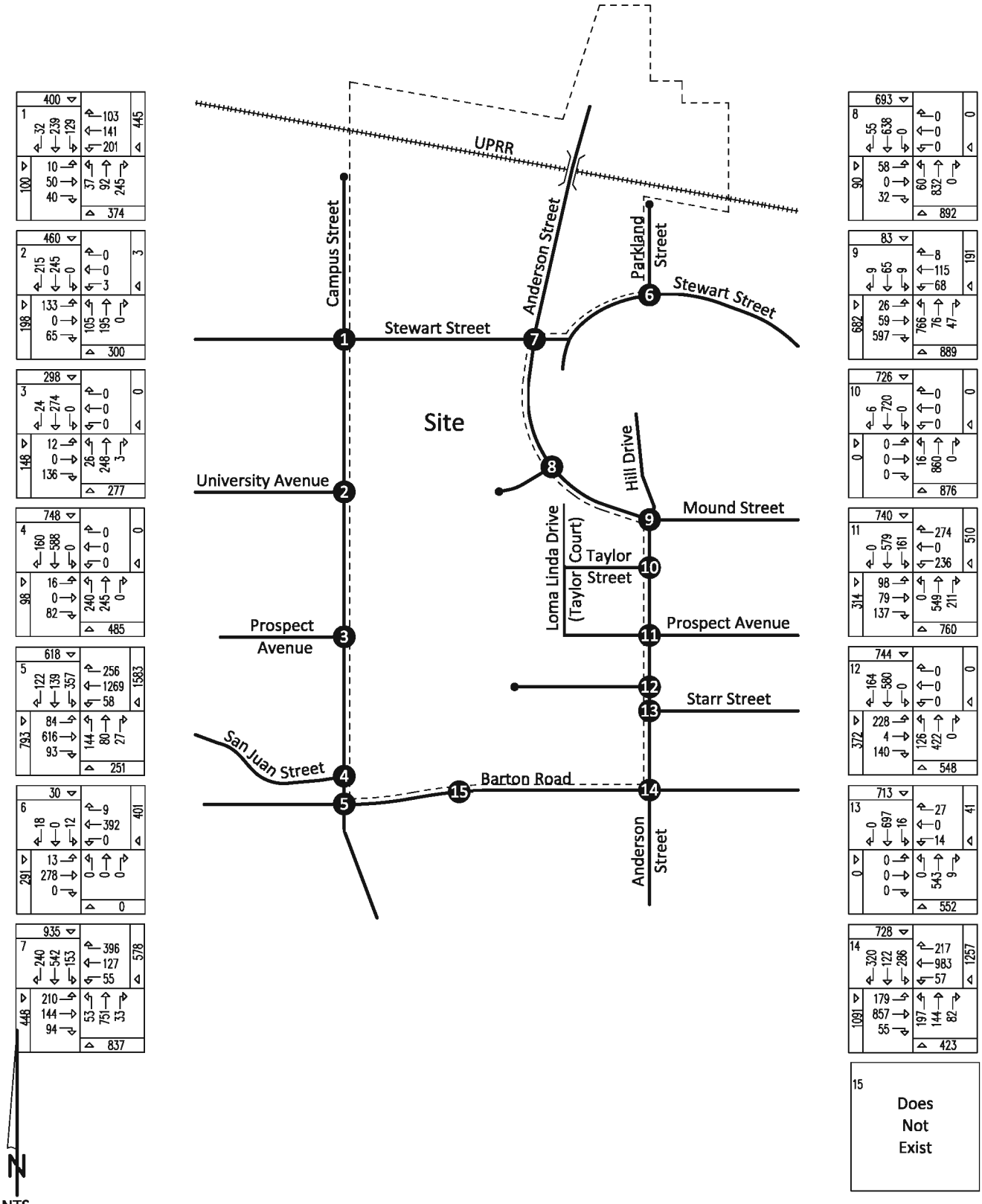

5341/18

KUNZMAN ASSOCIATES, INC. Intersection reference numbers are in upper left corner of turning movement boxes.

OVER 35 YEARS OF EXCELLENT SERVICE

Figure 19
Opening Year (2023) With Project
Morning Peak Hour Intersection Turning Movement Volumes

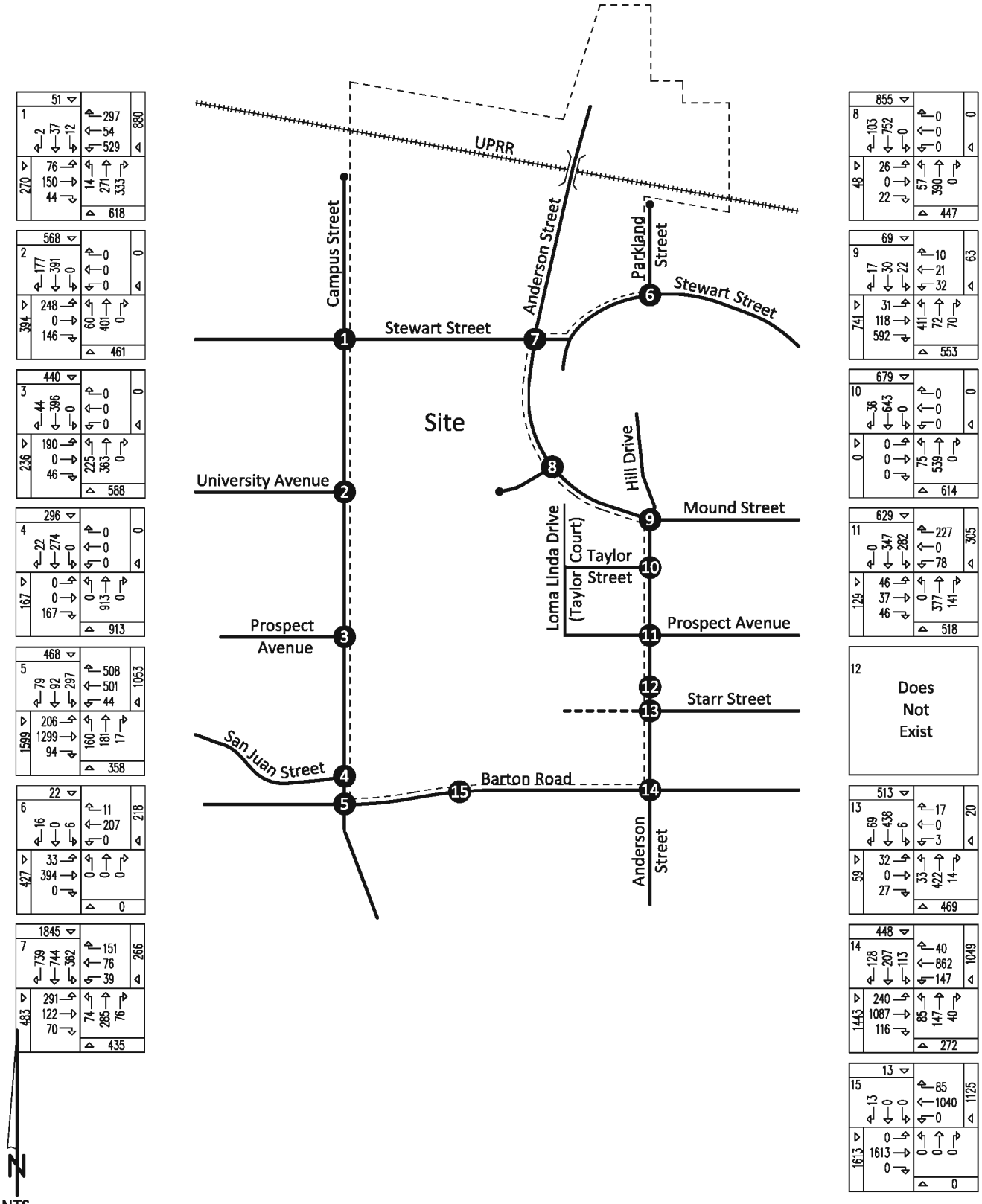

5341/19

KUNZMAN ASSOCIATES, INC. Intersection reference numbers are in upper left corner of turning movement boxes.

OVER 35 YEARS OF EXCELLENT SERVICE

Figure 20
Opening Year (2023) With Project
Evening Peak Hour Intersection Turning Movement Volumes

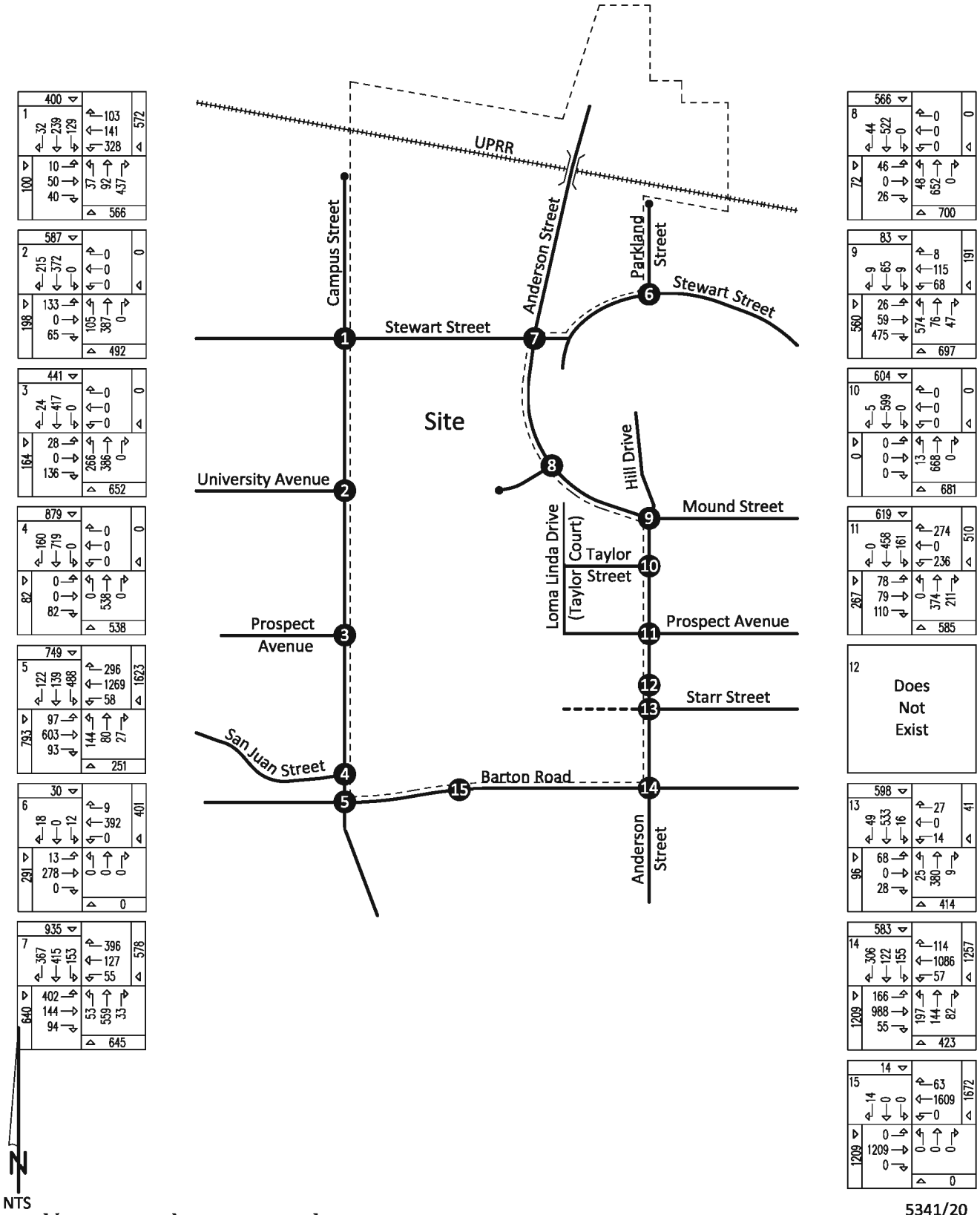

KUNZMAN ASSOCIATES, INC. Intersection reference numbers are in upper left corner of turning movement boxes.

5341/20

OVER 35 YEARS OF EXCELLENT SERVICE

V. Conclusions and Recommendations

A. Summary

The traffic issues related to the proposed land use and development have been evaluated in the context of the California Environmental Quality Act.

The City of Loma Linda is the lead agency responsible for preparation of the traffic impact analysis, in accordance with California Environmental Quality Act authorizing legislation. This report analyzes traffic impacts for existing and Opening Year (2013 and 2023) traffic conditions.

A series of scoping discussions were conducted with the following agencies to define the desired analysis locations for each future analysis year:

- City of Loma Linda
- Loma Linda University Health Services
- Loma Linda University Medical Center

In addition, the East Valley Traffic Model staff has also been contacted to discuss the project and its associated travel patterns.

No analysis is required further than 5 miles from the project site. The roadway elements that must be analyzed are dependent on both the analysis year (Opening Year) and project generated traffic volumes. The identification of the study area, and the intersections and highway segments requiring analysis, was based on an estimate of the two-way traffic volumes on the roadway segments near the project site. All arterial segments are required to be included in the analysis when the anticipated project volume equals or exceeds 50 two-way trips in the peak hours. The requirement is 100 two-way peak hour trips for freeways.

The project does not contribute additional traffic greater than the freeway threshold volume of 100 two-way peak hour trips to a Freeway. The project does not contribute additional traffic greater than the arterial link threshold volume of 50 two-way trips in the peak hours on facilities serving intersections in the City of Loma Linda.

The average daily traffic volume forecasts have been determined using the growth increment approach on the East Valley Traffic Model Year 2000 and Year 2035 average daily traffic volume forecasts (see Appendix C). This difference defines the growth in traffic over the 35 year period. The incremental growth in average daily traffic volume has been factored to reflect the forecast growth between Year 2011 and Year 2035. For this purpose, linear growth between the Year 2000 base condition and the forecast Year 2035 condition was assumed. Since the increment between Year 2011 and Year 2035 is 24 years of the 35 year time frame, a factor of 0.69 (i.e., 24/35) was used.

The Opening Year daily and peak hour directional roadway segment volume forecasts have been determined using the growth increment approach on the East Valley Traffic Model Year 2000 and Year 2035 peak hour volumes. The growth increment calculation worksheets are shown in Appendix C. Current peak hour intersection approach/departure data is a necessary input to this approach. The existing traffic count data serves as both the starting point for the refinement process, and also provides important insight into current travel patterns and the relationship between peak hour and daily traffic conditions. The initial turning movement proportions are estimated based upon the relationship of each approach leg's forecast traffic volume to the other legs forecast volumes at the intersection. The initial estimate of turning movement proportions is then entered into a spreadsheet program consistent with the National Cooperative Highway Research Program Report 255. A linear programming algorithm is used to calculate individual turning movements that match the known directional roadway segment volumes computed in the previous step. This program computes a likely set of intersection turning movements from intersection approach counts and the initial turning proportions from each approach leg.

The Opening Year (2013 and 2023) traffic volumes have been interpolated from the Year 2035 traffic volumes based upon a portion of the future growth increment.

Quality control checks and forecast adjustments were performed as necessary to ensure that all future traffic volume forecasts reflect a minimum of 10% growth over existing traffic volumes. The result of this traffic forecasting procedure is a series of traffic volumes suitable for traffic operations analysis.

The analysis of the traffic impacts from the proposed development and the assessment of the required mitigation measures were based on an evaluation of the existing and forecast traffic conditions in the vicinity of the site with and without the project. The following analysis years are considered in this report:

- Existing Conditions[2]
- Project Opening Year Conditions (2013)
  - Campus Street parking structure completed
  - Stewart Street underpass completed
- Project Opening Year Conditions (2023)
  - Campus Street/Barton Road parking structure completed
  - Anderson Street Hospital Entrance closed and aligned with Starr Street
  - Barton Road access completed

B. Existing Conditions

Regional access to the project site is provided by the I-10 Freeway. Local access is provided by various roadways in the vicinity of the site. The east-west roadways which will be most

[2] Stewart Street is currently closed for construction (between Campus Street and Anderson Street) and University Avenue is temporarily open for through traffic (between Campus Street and Anderson Street). Based upon discussions with City of Loma Linda staff, a comparison of the differences in traffic volumes for the two sets of data (Year 2011 and Year 2013) has been prepared for the Barton Road intersections in Table 1. The traffic volume comparison data shows that a nominal decrease in traffic volumes has occurred in the study area and the Year 2011 traffic count data (taken before the Stewart Street road closure) has been used in this report.

affected by the project include Stewart Street, University Avenue, Mound Street, Taylor Street, Prospect Avenue, Starr Street, San Juan Street, and Barton Road. The north-south roadways expected to provide local access include Campus Street, Anderson Street, and Parkland Street.

The study area intersections currently operate at acceptable Levels of Service during the peak hours for existing traffic conditions, except for the following study area intersections that currently operate at unacceptable Levels of Service during the peak hours:

Campus Street (NS) at:
Barton Road (EW) - #5

Anderson Street (NS) at:
Barton Road - #14

C. Existing Traffic Signal Warrant Analysis

A traffic signal appears to currently be warranted at the following study area intersection for existing traffic conditions (see Appendix E):

Campus Street (NS) at:
Stewart Street (EW) - #1

The unsignalized intersections have been evaluated for traffic signals using the California Department of Transportation Warrant 3 Peak Hour traffic signal warrant analysis, as specified in the Manual of Uniform Traffic Control Devices 2003 California Supplement, dated May 20, 2004.

D. Project Traffic

Trip generation has been based upon rates obtained from the Institute of Transportation Engineers, Trip Generation, 9th Edition, 2012.

As shown in Table 3, the current development (719 beds) is projected to generate approximately 9,505 daily vehicle trips, 683 of which will occur during the morning peak hour and 669 of which will occur during the evening peak hour.

As shown in Table 3, the proposed development (650 beds) is projected to generate approximately 8,593 daily vehicle trips, 618 of which will occur during the morning peak hour and 605 of which will occur during the evening peak hour.

The proposed development compared to the current development is projected to generate approximately 912 less daily vehicle trips, 65 less of which will occur during the morning peak hour and 64 less of which will occur during the evening peak hour.

However, in order to provide a “conservative” analysis, the project traffic volumes have not been reduced in the report for analysis purposes.

E. Future Conditions

For Opening Year (2013) Without Project traffic conditions, the following study area intersections are projected to operate at unacceptable Levels of Service during the peak hours, without improvements:

Campus Street (NS) at:
- Stewart Street (EW) - #1
- Barton Road EW) #5

Anderson Street (NS) at:
- Barton Road (EW) - #14

For Opening Year (2013) With Project traffic conditions, the following study area intersections are projected to operate at unacceptable Levels of Service during the peak hours, without improvements:

Campus Street (NS) at:
- Stewart Street (EW) - #1
- University Avenue (EW) - #2
- Barton Road EW) #5

Anderson Street (NS) at:
- Barton Road (EW) - #14

As shown in Table 5, the study area intersections are projected to operate at acceptable Levels of Service during the peak hours for Opening Year (2013) With Project traffic conditions, with improvements.

For Opening Year (2023) Without Project traffic conditions, the following study area intersections are projected to operate at unacceptable Levels of Service during the peak hours, without improvements:

Campus Street (NS) at:
- Stewart Street (EW) - #1
- University Avenue (EW) - #2
- San Juan Street (EW) - #4
- Barton Road EW) #5

Anderson Street (NS) at:
- Mound Street (EW) - #9
- Prospect Avenue (EW) - #11
- Main Project Access (EW) - #12
- Barton Road (EW) - #14

For Opening Year (2023) With Project traffic conditions, the following study area intersections are projected to operate at unacceptable Levels of Service during the peak hours, without improvements:

Campus Street (NS) at:
- Stewart Street (EW) - #1
- University Avenue (EW) - #2
- San Juan Street (EW) - #4
- Barton Road EW) #5

Anderson Street (NS) at:
- Mound Street (EW) - #9
- Prospect Avenue (EW) - #11
- Barton Road (EW) - #14

As shown in Table 7, the study area intersections are projected to operate at acceptable Levels of Service during the peak hours for Opening Year (2023) With Project traffic conditions, with improvements.

F. Future Traffic Signal Warrant Analysis

A traffic signal is projected to be warranted at the following additional study area intersection for Opening Year (2013) Without Project traffic conditions (see Appendix E):

Anderson Street (NS) at:
- Prospect Avenue (EW) - #11

A traffic signal is projected to be warranted at the following additional study area intersection for Opening Year (2013) With Project traffic conditions (see Appendix E):

Campus Street (NS) at:
- University Avenue (EW) - #2

Traffic signals are projected to be warranted at the following additional study area intersections for Opening Year (2023) Without Project traffic conditions (see Appendix E):

Anderson Street (NS) at:
- Mound Street (EW) - #9

The unsignalized intersections have been evaluated for traffic signals using the California Department of Transportation Warrant 3 Peak Hour traffic signal warrant analysis, as specified in the Manual.

G. Recommendations

The study area improvement summary is included in Table 8. Table 8 includes the intersection and roadway segment improvements needed to achieve acceptable Levels of Service. The Opening Year site-specific circulation and access recommendations are depicted on Figure 21.

The project site should provide sufficient parking spaces to meet City of Loma Linda parking code requirements in order to service on-site parking demand.

On-site traffic signing and striping should be implemented in conjunction with detailed construction plans for the project.

Sight distance at each project access should be reviewed with respect to California Department of Transportation/City of Loma Linda standards in conjunction with the preparation of final grading, landscaping, and street improvement plans.

As is the case for any roadway design, the City of Loma Linda should periodically review traffic operations in the vicinity of the project once the project is constructed to assure that the traffic operations are satisfactory.

Table 8

Study Area Improvement Summary

Descriptor	Location	Improvement	Existing	Opening Year 2013	Opening Year 2023
Parking Structures	Campus Street parking structure	Under construction	X	X	X
	Campus Street/Barton Road parking structure	760 parking spaces			X
Roadway Segments	Prospect Avenue between San Lucas Street and Campus Street	Move roadway to south of west parking structure		X	X
	University Avenue between Campus Street and Anderson Street	Allow through traffic[1]	X		
	Stewart Street between Campus Street and Anderson Street	Construct 4 lane underpass	X	X	X
Intersections	Campus Street/Stewart Street - #1	Install traffic signal		X	X
	Campus Street/University Avenue - #2	Install traffic signal		X	X
	Campus Street/Prospect Avenue - #3	Move traffic signal		X	X
	Campus Street/San Juan Street - #4	Restrict to right turns in/out only[2]			X
	Campus Street/Barton Rd. - #5	Restripe SB through lane to SB through/left turn lane		X	X
		Provide WB right turn overlap traffic signal phasing		X	X
	Anderson Street/Mound Street - #9	Install traffic signal			X
		Provide EB right turn overlap traffic signal phasing			X
	Anderson Street/Prospect Avenue - #11	Install traffic signal		X	X
	Anderson Street/Main Project Access - #12	Close and align with Starr Street			X
	Anderson Street/Starr Street- #13	Align hospital entrance with Starr Street			X
	Project Access/Barton Road - #15	Construct right turns in/out only access			X

[1] This improvement is temporary during the current construction of the Stewart Street 4 lane underpass.

[2] The traffic volumes have been reassigned to the Campus Street/Prospect Avenue intersection.

Figure 21
Circulation Recommendations

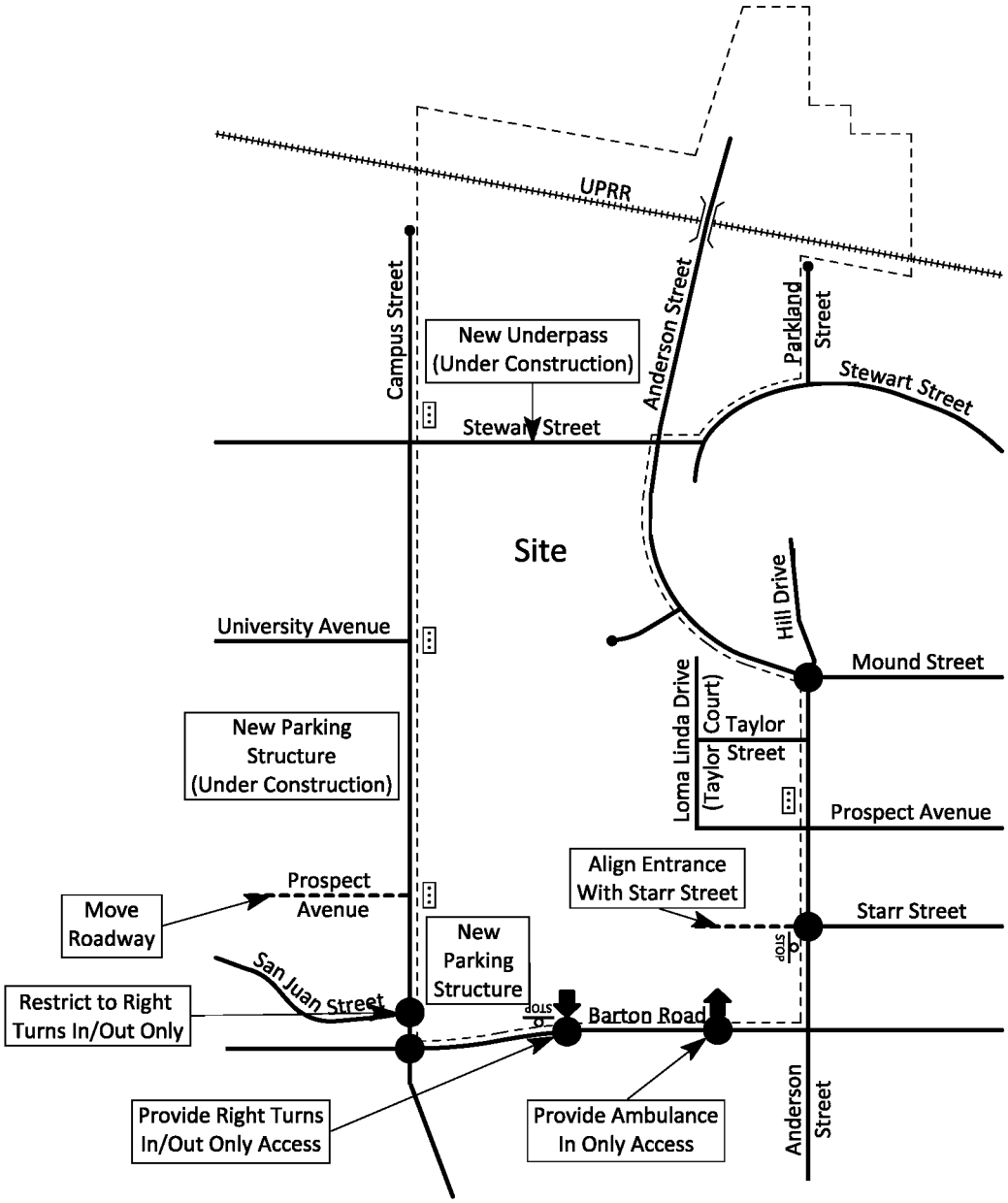

The project site should provide sufficient parking spaces to meet City of Loma Linda parking code requirements in order to service on-site parking demand.

On-site traffic signing and striping should be implemented in conjunction with detailed construction plans for the project.

Sight distance at each project access should be reviewed with respect to California Department of Transportation/City of Loma Linda standards in conjunction with the preparation of final grading, landscaping, and street improvement plans.

As is the case for any roadway design, the City of Loma Linda should periodically review traffic operations in the vicinity of the project once the project is constructed to assure that the traffic operations are satisfactory.

Legend

= Traffic Signal
= Stop Sign
= Intersection Improvements (See Table 8)

N
NTS

5341/21

KUNZMAN ASSOCIATES, INC.
OVER 35 YEARS OF EXCELLENT SERVICE

Appendices

Appendix A – Glossary of Transportation Terms

Appendix B – Traffic Count Worksheets

Appendix C – Future Growth Increment Calculation Worksheets

Appendix D – Explanation and Calculation of Intersection Delay

Appendix E – Traffic Signal Warrant Worksheets

APPENDIX A

Glossary of Transportation Terms

GLOSSARY OF TRANSPORTATION TERMS

COMMON ABBREVIATIONS

AC:	Acres
ADT:	Average Daily Traffic
Caltrans:	California Department of Transportation
DU:	Dwelling Unit
ICU:	Intersection Capacity Utilization
LOS:	Level of Service
TSF:	Thousand Square Feet
V/C:	Volume/Capacity
VMT:	Vehicle Miles Traveled

TERMS

AVERAGE DAILY TRAFFIC: The total volume during a year divided by the number of days in a year. Usually only weekdays are included.

BANDWIDTH: The number of seconds of green time available for through traffic in a signal progression.

BOTTLENECK: A constriction along a travelway that limits the amount of traffic that can proceed downstream from its location.

CAPACITY: The maximum number of vehicles that can be reasonably expected to pass over a given section of a lane or a roadway in a given time period.

CHANNELIZATION: The separation or regulation of conflicting traffic movements into definite paths of travel by the use of pavement markings, raised islands, or other suitable means to facilitate the safe and orderly movements of both vehicles and pedestrians.

CLEARANCE INTERVAL: Nearly same as yellow time. If there is an all red interval after the end of a yellow, then that is also added into the clearance interval.

CORDON: An imaginary line around an area across which vehicles, persons, or other items are counted (in and out).

CYCLE LENGTH: The time period in seconds required for one complete signal cycle.

CUL-DE-SAC STREET: A local street open at one end only, and with special provisions for turning around.

DAILY CAPACITY: The daily volume of traffic that will result in a volume during the peak hour equal to the capacity of the roadway.

DELAY: The time consumed while traffic is impeded in its movement by some element over which it has no control, usually expressed in seconds per vehicle.

DEMAND RESPONSIVE SIGNAL: Same as traffic-actuated signal.

DENSITY: The number of vehicles occupying in a unit length of the through traffic lanes of a roadway at any given instant. Usually expressed in vehicles per mile.

DETECTOR: A device that responds to a physical stimulus and transmits a resulting impulse to the signal controller.

DESIGN SPEED: A speed selected for purposes of design. Features of a highway, such as curvature, superelevation, and sight distance (upon which the safe operation of vehicles is dependent) are correlated to design speed.

DIRECTIONAL SPLIT: The percent of traffic in the peak direction at any point in time.

DIVERSION: The rerouting of peak hour traffic to avoid congestion.

FORCED FLOW: Opposite of free flow.

FREE FLOW: Volumes are well below capacity. Vehicles can maneuver freely and travel is unimpeded by other traffic.

GAP: Time or distance between successive vehicles in a traffic stream, rear bumper to front bumper.

HEADWAY: Time or distance spacing between successive vehicles in a traffic stream, front bumper to front bumper.

INTERCONNECTED SIGNAL SYSTEM: A number of intersections that are connected to achieve signal progression.

LEVEL OF SERVICE: A qualitative measure of a number of factors, which include speed and travel time, traffic interruptions, freedom to maneuver, safety, driving comfort and convenience, and operating costs.

LOOP DETECTOR: A vehicle detector consisting of a loop of wire embedded in the roadway, energized by alternating current and producing an output circuit closure when passed over by a vehicle.

MINIMUM ACCEPTABLE GAP: Smallest time headway between successive vehicles in a traffic stream into which another vehicle is willing and able to cross or merge.

MULTI-MODAL: More than one mode; such as automobile, bus transit, rail rapid transit, and bicycle transportation modes.

OFFSET: The time interval in seconds between the beginning of green at one intersection and the beginning of green at an adjacent intersection.

PLATOON: A closely grouped component of traffic that is composed of several vehicles moving, or standing ready to move, with clear spaces ahead and behind.

ORIGIN-DESTINATION SURVEY: A survey to determine the point of origin and the point of destination for a given vehicle trip.

PASSENGER CAR EQUIVALENTS (PCE): One car is one Passenger Car Equivalent. A truck is equal to 2 or 3 Passenger Car Equivalents in that a truck requires longer to start, goes slower, and accelerates slower. Loaded trucks have a higher Passenger Car Equivalent than empty trucks.

PEAK HOUR: The 60 consecutive minutes with the highest number of vehicles.

PRETIMED SIGNAL: A type of traffic signal that directs traffic to stop and go on a predetermined time schedule without regard to traffic conditions. Also, fixed time signal.

PROGRESSION: A term used to describe the progressive movement of traffic through several signalized intersections.

SCREEN-LINE: An imaginary line or physical feature across which all trips are counted, normally to verify the validity of mathematical traffic models.

SIGNAL CYCLE: The time period in seconds required for one complete sequence of signal indications.

SIGNAL PHASE: The part of the signal cycle allocated to one or more traffic movements.

STARTING DELAY: The delay experienced in initiating the movement of queued traffic from a stop to an average running speed through a signalized intersection.

TRAFFIC-ACTUATED SIGNAL: A type of traffic signal that directs traffic to stop and go in accordance with the demands of traffic, as registered by the actuation of detectors.

TRIP: The movement of a person or vehicle from one location (origin) to another (destination). For example, from home to store to home is two trips, not one.

TRIP-END: One end of a trip at either the origin or destination; i.e. each trip has two trip-ends. A trip-end occurs when a person, object, or message is transferred to or from a vehicle.

TRIP GENERATION RATE: The quality of trips produced and/or attracted by a specific land use stated in terms of units such as per dwelling, per acre, and per 1,000 square feet of floor space.

TRUCK: A vehicle having dual tires on one or more axles, or having more than two axles.

UNBALANCED FLOW: Heavier traffic flow in one direction than the other. On a daily basis, most facilities have balanced flow. During the peak hours, flow is seldom balanced in an urban area.

VEHICLE MILES OF TRAVEL: A measure of the amount of usage of a section of highway, obtained by multiplying the average daily traffic by length of facility in miles.

APPENDIX B

Traffic Count Worksheets

Year 2011

Prepared by NDS/ATD

VOLUME

San Juan St between San Lucas Dr & Campus St

Day: Thursday
Date: 10/13/2011

City: Loma Linda
Project #: CA11_6102_001

DAILY TOTALS	NB	SB	EB	WB	Total
	0	0	221	316	537

AM Period	NB	SB	EB		WB		TOTAL	PM Period	NB	SB	EB		WB		TOTAL
00:00			0		0		0	12:00			7		4		11
00:15			0		2		2	12:15			3		4		7
00:30			0		1		1	12:30			4		4		8
00:45			1	1	0	3	2	12:45			4	18	7	19	11
01:00			0		3		3	13:00			1		7		8
01:15			0		0		0	13:15			1		2		3
01:30			0		0		0	13:30			1		2		3
01:45			0		0	3	0	13:45			4	7	4	15	8
02:00			0		0		0	14:00			4		5		9
02:15			0		1		1	14:15			3		9		12
02:30			0		0		0	14:30			3		2		5
02:45			0		1	2	1	14:45			6	16	1	17	7
03:00			0		0		0	15:00			2		6		8
03:15			1		1		2	15:15			6		2		8
03:30			0		0		0	15:30			6		5		11
03:45			0	1	0	1	0	15:45			2	16	9	22	11
04:00			0		0		0	16:00			3		4		7
04:15			0		2		2	16:15			1		8		9
04:30			0		0		0	16:30			3		10		13
04:45			2	2	1	3	3	16:45			5	12	3	25	8
05:00			0		1		1	17:00			2		5		7
05:15			1		1		2	17:15			4		4		8
05:30			2		0		2	17:30			3		3		6
05:45			0	3	0	2	0	17:45			6	15	5	17	11
06:00			1		1		2	18:00			2		4		6
06:15			2		4		6	18:15			2		3		5
06:30			4		6		10	18:30			3		4		7
06:45			2	9	3	14	5	18:45			4	11	4	15	8
07:00			1		9		10	19:00			1		6		7
07:15			1		5		6	19:15			4		5		9
07:30			4		3		7	19:30			6		3		9
07:45			4	10	6	23	10	19:45			2	13	2	16	4
08:00			7		19		26	20:00			1		5		6
08:15			4		8		12	20:15			1		1		2
08:30			3		6		9	20:30			1		1		2
08:45			3	17	4	37	7	20:45			2	5	3	10	5
09:00			3		7		10	21:00			6		7		13
09:15			4		2		6	21:15			5		4		9
09:30			1		3		4	21:30			3		6		9
09:45			0	8	1	13	1	21:45			2	16	1	18	3
10:00			4		2		6	22:00			2		3		5
10:15			3		2		5	22:15			2		1		3
10:30			2		3		5	22:30			0		1		1
10:45			5	14	3	10	8	22:45			3	7	2	7	5
11:00			5		7		12	23:00			2		2		4
11:15			3		6		9	23:15			1		2		3
11:30			4		2		6	23:30			1		0		1
11:45			2	14	3	18	5	23:45			2	6	2	6	4
TOTALS			79		129		208	TOTALS			142		187		329
SPLIT %			38.0%		62.0%		38.7%	SPLIT %			43.2%		56.8%		61.3%

DAILY TOTALS	NB	SB	EB	WB	Total
	0	0	221	316	537

AM Peak Hour	07:30	07:45	07:45	PM Peak Hour	14:45	15:45	15:45
AM Pk Volume	19	39	57	PM Pk Volume	20	31	40
Pk Hr Factor	0.679	0.513	0.548	Pk Hr Factor	0.833	0.775	0.769
7 - 9 Volume	27	60	87	4 - 6 Volume	27	42	69
7 - 9 Peak Hour	07:30	07:45	07:45	4 - 6 Peak Hour	17:00	16:15	16:00
7 - 9 Pk Volume	19	39	57	4 - 6 Pk Volume	15	26	37
Pk Hr Factor	0.679	0.513	0.548	Pk Hr Factor	0.625	0.650	0.712

NATIONAL DATA AND SURVEYING SERVICES

Axle Count

Project # 11-6101-001 Class

Location: Campus St & Stewart St City: Loma Linda Date: 10/13/2011 Day: Thursday

CONTROL: 4-Way Stop

		NL	NT	NR	SL	ST	SR	EL	ET	ER	WL	WT	WR
	LANES:	0.5	0.5	1	0	1	0	0	1	0	0.5	0.5	1
7:00	CARS	1	22	41	3	4	0	1	13	4	58	3	50
	2-Axle Trucks	0	3	1	0	3	0	0	0	0	1	1	0
	3-Axle Trucks	0	0	0	0	0	0	0	0	0	0	0	0
	4-Axle Trucks	0	0	0	0	0	0	0	0	0	0	0	0
	5-Axle+ Trucks	0	0	0	0	0	0	0	0	0	0	0	0
7:15	CARS	3	41	48	3	8	0	2	12	8	59	6	51
	2-Axle Trucks	0	2	2	0	2	0	0	1	0	0	1	0
	3-Axle Trucks	0	0	0	0	0	0	0	0	0	1	0	0
	4-Axle Trucks	0	0	0	0	0	0	0	0	0	0	0	0
	5-Axle+ Trucks	0	0	0	0	0	0	0	0	0	0	0	0
7:30	CARS	3	85	68	0	7	0	6	12	3	91	8	88
	2-Axle Trucks	0	1	0	0	1	0	0	0	0	1	0	0
	3-Axle Trucks	0	0	0	0	0	0	0	0	0	0	0	0
	4-Axle Trucks	0	0	0	0	0	0	0	0	0	0	0	0
	5-Axle+ Trucks	0	0	0	0	0	0	0	0	0	0	0	0
7:45	CARS	1	78	55	4	8	0	16	18	3	83	9	83
	2-Axle Trucks	0	0	1	0	0	0	0	1	0	0	0	0
	3-Axle Trucks	0	0	0	0	0	0	0	0	0	0	0	0
	4-Axle Trucks	0	0	0	0	0	0	0	0	0	0	0	0
	5-Axle+ Trucks	0	0	0	0	0	0	0	0	0	0	0	0
8:00	CARS	4	53	48	2	8	1	7	9	4	82	12	57
	2-Axle Trucks	0	1	1	0	0	0	0	0	1	2	1	1
	3-Axle Trucks	0	0	0	0	0	0	0	0	0	0	0	0
	4-Axle Trucks	0	0	0	0	0	0	0	0	0	0	0	0
	5-Axle+ Trucks	0	0	0	0	0	0	0	0	0	0	0	0
8:15	CARS	1	35	39	3	10	0	6	6	4	54	5	28
	2-Axle Trucks	0	0	2	0	1	0	0	0	0	1	1	0
	3-Axle Trucks	0	0	0	0	0	0	0	0	0	0	0	0
	4-Axle Trucks	0	0	0	0	0	0	0	0	0	0	0	0
	5-Axle+ Trucks	0	0	0	0	0	0	0	0	0	0	0	0
8:30	CARS	3	33	37	8	9	0	2	9	0	33	5	32
	2-Axle Trucks	0	1	0	1	1	0	0	0	0	0	3	0
	3-Axle Trucks	0	0	0	0	0	0	0	0	0	0	0	0
	4-Axle Trucks	0	0	0	0	0	0	0	0	0	0	0	0
	5-Axle+ Trucks	0	0	0	0	0	0	0	0	0	0	0	0
8:45	CARS	2	28	37	4	8	5	1	5	6	44	8	22
	2-Axle Trucks	0	0	0	0	2	0	0	0	0	3	0	0
	3-Axle Trucks	0	0	0	0	0	0	0	0	0	0	0	0
	4-Axle Trucks	0	0	0	0	0	0	0	0	0	0	0	0
	5-Axle+ Trucks	0	0	0	0	0	0	0	0	0	0	0	0

MOVEMENT TOTALS

	NL	NT	NR	SL	ST	SR	EL	ET	ER	WL	WT	WR
CARS	18	375	373	27	62	6	41	84	32	504	56	411
2-Axle Trucks	0	8	7	1	10	0	0	2	1	8	7	1
3-Axle Trucks	0	0	0	0	0	0	0	0	0	1	0	0
4-Axle Trucks	0	0	0	0	0	0	0	0	0	0	0	0
5-Axle+ Trucks	0	0	0	0	0	0	0	0	0	0	0	0
TOTALS	18	383	380	28	72	6	41	86	33	513	63	412
	NL	*NT*	*NR*	*SL*	*ST*	*SR*	*EL*	*ET*	*ER*	*WL*	*WT*	*WR*

AM Peak Hr Begins at: 715 AM

PEAK VOLUMES =	11	261	223	9	34	1	31	53	19	319	37	280
PEAK HR. FACTOR:		0.788			0.846			0.678			0.846	

NATIONAL DATA AND SURVEYING SERVICES

Axle Count

Project # 11-6101-001 Class

Location: Campus St & Stewart St City: Loma Linda Date: 10/13/2011 Day: Thursday

CONTROL: 4-Way Stop

		NL	NT	NR	SL	ST	SR	EL	ET	ER	WL	WT	WR
	LANES:	0.5	0.5	1	0	1	0	0	1	0	0.5	0.5	1
16:00	CARS	4	6	41	35	17	1	0	5	2	41	10	12
	2-Axle Trucks	0	1	3	0	2	0	0	0	0	1	0	0
	3-Axle Trucks	0	0	0	0	0	0	0	0	0	0	0	0
	4-Axle Trucks	0	0	0	0	0	0	0	0	0	0	0	0
	5-Axle+ Trucks	0	0	0	0	0	0	0	0	0	0	0	0
16:15	CARS	4	6	38	49	23	2	0	14	2	34	15	21
	2-Axle Trucks	0	3	1	0	3	0	0	0	0	1	0	0
	3-Axle Trucks	0	0	0	0	0	0	0	0	0	0	0	0
	4-Axle Trucks	0	0	0	0	0	0	0	0	0	0	0	0
	5-Axle+ Trucks	0	0	0	0	0	0	0	0	0	0	0	0
16:30	CARS	1	9	49	37	27	1	1	6	6	38	15	12
	2-Axle Trucks	0	5	3	0	4	0	0	0	0	0	0	0
	3-Axle Trucks	0	0	0	0	0	0	0	0	0	0	0	0
	4-Axle Trucks	0	0	0	0	0	0	0	0	0	0	0	0
	5-Axle+ Trucks	0	0	0	0	0	0	0	0	0	0	0	0
16:45	CARS	2	22	57	33	53	2	3	11	9	49	13	35
	2-Axle Trucks	0	2	1	0	4	0	0	0	0	1	0	0
	3-Axle Trucks	0	0	0	0	0	0	0	0	0	0	0	0
	4-Axle Trucks	0	0	0	0	0	0	0	0	0	0	0	0
	5-Axle+ Trucks	0	0	0	0	0	0	0	0	0	0	0	0
17:00	CARS	5	13	50	26	50	0	0	5	6	56	13	26
	2-Axle Trucks	0	5	1	0	3	0	0	0	0	1	1	0
	3-Axle Trucks	0	0	0	0	0	0	0	0	0	0	0	0
	4-Axle Trucks	0	0	0	0	0	0	0	0	0	0	0	0
	5-Axle+ Trucks	0	0	0	0	0	0	0	0	0	0	0	0
17:15	CARS	2	12	58	28	57	6	1	6	6	43	18	16
	2-Axle Trucks	0	4	2	0	3	0	0	0	0	1	0	0
	3-Axle Trucks	0	0	0	0	0	0	0	0	0	0	0	0
	4-Axle Trucks	0	0	0	0	0	0	0	0	0	0	0	0
	5-Axle+ Trucks	0	0	0	0	0	0	0	0	0	0	0	0
17:30	CARS	4	13	66	32	40	2	1	9	4	38	12	23
	2-Axle Trucks	0	2	0	0	5	0	0	0	0	3	0	0
	3-Axle Trucks	0	0	0	0	0	0	0	0	0	0	0	0
	4-Axle Trucks	0	0	0	0	0	0	0	0	0	0	0	0
	5-Axle+ Trucks	0	0	0	0	0	0	0	0	0	0	0	0
17:45	CARS	6	15	51	50	37	5	1	16	7	43	15	19
	2-Axle Trucks	0	2	2	0	1	0	0	0	0	1	0	0
	3-Axle Trucks	0	0	0	0	0	0	0	0	0	0	0	0
	4-Axle Trucks	0	0	0	0	0	0	0	0	0	0	0	0
	5-Axle+ Trucks	0	0	0	0	0	0	0	0	0	0	0	0

MOVEMENT TOTALS

	NL	NT	NR	SL	ST	SR	EL	ET	ER	WL	WT	WR
CARS	28	96	410	290	304	19	7	72	42	342	111	164
2-Axle Trucks	0	24	13	0	25	0	0	0	0	9	1	0
3-Axle Trucks	0	0	0	0	0	0	0	0	0	0	0	0
4-Axle Trucks	0	0	0	0	0	0	0	0	0	0	0	0
5-Axle+ Trucks	0	0	0	0	0	0	0	0	0	0	0	0
TOTALS	28	120	423	290	329	19	7	72	42	351	112	164
	NL	*NT*	*NR*	*SL*	*ST*	*SR*	*EL*	*ET*	*ER*	*WL*	*WT*	*WR*

PM Peak Hr Begins at: 1645 PM

PEAK VOLUMES =	13	73	235	119	215	10	5	31	25	192	57	100
PEAK HR. FACTOR:		0.944			0.915			0.663			0.890	

NATIONAL DATA AND SURVEYING SERVICES

Axle Count

Project # 11-6101-002 Class

Location: Campus St & University Ave City: Loma Linda Date: 10/13/2011 Day: Thursday

CONTROL: 4-Way Stop

	LANES:	0	1	0	0	1	0	0	1	0	0	1	0
		NL	NT	NR	SL	ST	SR	EL	ET	ER	WL	WT	WR
7:00	CARS	4	33	0	0	23	28	39	0	11	0	0	0
	2-Axle Trucks	0	3	0	0	5	0	1	0	0	0	0	0
	3-Axle Trucks	0	0	0	0	0	0	0	0	0	0	0	0
	4-Axle Trucks	0	0	0	0	0	0	0	0	0	0	0	0
	5-Axle+ Trucks	0	0	0	0	0	0	0	0	0	0	0	0
7:15	CARS	9	49	0	0	41	19	51	0	10	0	0	0
	2-Axle Trucks	0	3	0	0	2	0	0	0	0	0	0	0
	3-Axle Trucks	0	0	0	0	0	1	0	0	0	0	0	0
	4-Axle Trucks	0	0	0	0	0	0	0	0	0	0	0	0
	5-Axle+ Trucks	0	0	0	0	0	0	0	0	0	0	0	0
7:30	CARS	12	98	1	0	42	40	71	0	17	0	0	0
	2-Axle Trucks	0	0	0	0	0	1	1	0	0	0	0	0
	3-Axle Trucks	0	0	0	0	0	0	0	0	0	0	0	0
	4-Axle Trucks	0	0	0	0	0	0	0	0	0	0	0	0
	5-Axle+ Trucks	0	0	0	0	0	0	0	0	0	0	0	0
7:45	CARS	11	78	0	0	36	43	57	0	24	0	0	0
	2-Axle Trucks	0	1	0	0	0	0	0	0	0	0	0	0
	3-Axle Trucks	0	0	0	0	0	0	0	0	0	0	0	0
	4-Axle Trucks	0	0	0	0	0	0	0	0	0	0	0	0
	5-Axle+ Trucks	0	0	0	0	0	0	0	0	0	0	0	0
8:00	CARS	9	65	0	0	28	65	45	0	17	0	0	0
	2-Axle Trucks	1	1	0	1	2	0	0	0	0	0	0	0
	3-Axle Trucks	0	0	0	0	0	0	0	0	0	0	0	0
	4-Axle Trucks	0	0	0	0	0	0	0	0	0	0	0	0
	5-Axle+ Trucks	0	0	0	0	0	0	0	0	0	0	0	0
8:15	CARS	6	36	1	0	26	26	28	0	9	1	0	0
	2-Axle Trucks	0	1	0	0	2	0	0	0	0	0	0	0
	3-Axle Trucks	0	0	0	0	0	0	0	0	0	0	0	0
	4-Axle Trucks	0	0	0	0	0	0	0	0	0	0	0	0
	5-Axle+ Trucks	0	0	0	0	0	0	0	0	0	0	0	0
8:30	CARS	6	39	0	0	24	13	39	1	24	0	0	1
	2-Axle Trucks	1	0	0	0	1	0	1	0	0	0	0	0
	3-Axle Trucks	0	0	0	0	0	0	0	0	0	0	0	0
	4-Axle Trucks	0	0	0	0	0	0	0	0	0	0	0	0
	5-Axle+ Trucks	0	0	0	0	0	0	0	0	0	0	0	0
8:45	CARS	14	30	0	0	36	26	18	0	13	0	0	1
	2-Axle Trucks	0	0	0	0	4	1	0	0	0	0	0	0
	3-Axle Trucks	0	0	0	0	0	0	0	0	0	0	0	0
	4-Axle Trucks	0	0	0	0	0	0	0	0	0	0	0	0
	5-Axle+ Trucks	0	0	0	0	0	0	0	0	0	0	0	0

MOVEMENT TOTALS

CARS	71	428	2	0	256	260	348	1	125	1	0	2
2-Axle Trucks	2	9	0	1	16	2	3	0	0	0	0	0
3-Axle Trucks	0	0	0	0	0	1	0	0	0	0	0	0
4-Axle Trucks	0	0	0	0	0	0	0	0	0	0	0	0
5-Axle+ Trucks	0	0	0	0	0	0	0	0	0	0	0	0
TOTALS	73	437	2	1	272	263	351	1	125	1	0	2
	NL	*NT*	*NR*	*SL*	*ST*	*SR*	*EL*	*ET*	*ER*	*WL*	*WT*	*WR*

AM Peak Hr Begins at: 715 AM

PEAK VOLUMES =	42	295	1	1	151	169	225	0	68	0	0	0
PEAK HR. FACTOR:		0.761			0.836			0.823			0.000	

NATIONAL DATA AND SURVEYING SERVICES

Axle Count

Project # 11-6101-002 Class

Location: Campus St & University Ave City: Loma Linda Date: 10/13/2011 Day: Thursday

CONTROL: 4-Way Stop

	LANES:	0	1	0	0	1	0	0	1	0	0	1	0
		NL	NT	NR	SL	ST	SR	EL	ET	ER	WL	WT	WR
16:00	CARS	12	23	0	2	25	22	15	0	9	0	1	0
	2-Axle Trucks	0	1	0	0	1	2	1	0	1	0	0	2
	3-Axle Trucks	0	0	0	0	0	0	0	0	0	0	0	0
	4-Axle Trucks	0	0	0	0	0	0	0	0	0	0	0	0
	5-Axle+ Trucks	0	0	0	0	0	0	0	0	0	0	0	0
16:15	CARS	19	18	0	1	24	27	15	0	13	0	0	0
	2-Axle Trucks	2	4	0	0	1	3	0	0	0	0	0	0
	3-Axle Trucks	0	0	0	0	0	0	0	0	0	0	0	0
	4-Axle Trucks	0	0	0	0	0	0	0	0	0	0	0	0
	5-Axle+ Trucks	0	0	0	0	0	0	0	0	0	0	0	0
16:30	CARS	8	21	0	0	36	21	30	0	18	0	0	0
	2-Axle Trucks	1	7	0	0	2	2	1	0	2	0	0	0
	3-Axle Trucks	0	0	0	0	0	0	0	0	0	0	0	0
	4-Axle Trucks	0	0	0	0	0	0	0	0	0	0	0	0
	5-Axle+ Trucks	0	0	0	0	0	0	0	0	0	0	0	0
16:45	CARS	13	35	0	0	46	51	34	0	21	0	0	0
	2-Axle Trucks	1	3	0	0	3	2	0	0	0	0	0	0
	3-Axle Trucks	0	0	0	0	0	0	0	0	0	0	0	0
	4-Axle Trucks	0	0	0	0	0	0	0	0	0	0	0	0
	5-Axle+ Trucks	0	0	0	0	0	0	0	0	0	0	0	0
17:00	CARS	12	32	0	0	59	54	32	0	5	0	0	0
	2-Axle Trucks	2	5	0	0	3	0	0	0	1	1	0	0
	3-Axle Trucks	0	0	0	0	0	0	0	0	0	0	0	0
	4-Axle Trucks	0	0	0	0	0	0	0	0	0	0	0	0
	5-Axle+ Trucks	0	0	0	0	0	0	0	0	0	0	0	0
17:15	CARS	28	23	0	0	52	56	27	0	14	0	0	0
	2-Axle Trucks	1	6	0	0	4	0	0	0	0	0	0	0
	3-Axle Trucks	0	0	0	0	0	0	0	0	0	0	0	0
	4-Axle Trucks	0	0	0	0	0	0	0	0	0	0	0	0
	5-Axle+ Trucks	0	0	0	0	0	0	0	0	0	0	0	0
17:30	CARS	9	33	0	0	43	43	36	0	9	0	0	0
	2-Axle Trucks	1	2	0	0	5	3	0	0	2	0	0	0
	3-Axle Trucks	0	0	0	0	0	0	0	0	0	0	0	0
	4-Axle Trucks	0	0	0	0	0	0	0	0	0	0	0	0
	5-Axle+ Trucks	0	0	0	0	0	0	0	0	0	0	0	0
17:45	CARS	17	27	0	0	44	53	37	0	7	0	0	0
	2-Axle Trucks	1	4	0	0	1	0	0	0	0	0	0	0
	3-Axle Trucks	0	0	0	0	0	0	0	0	0	0	0	0
	4-Axle Trucks	0	0	0	0	0	0	0	0	0	0	0	0
	5-Axle+ Trucks	0	0	0	0	0	0	0	0	0	0	0	0

MOVEMENT TOTALS

CARS	118	212	0	3	329	327	226	0	96	0	1	0
2-Axle Trucks	9	32	0	0	20	12	2	0	6	1	0	2
3-Axle Trucks	0	0	0	0	0	0	0	0	0	0	0	0
4-Axle Trucks	0	0	0	0	0	0	0	0	0	0	0	0
5-Axle+ Trucks	0	0	0	0	0	0	0	0	0	0	0	0
TOTALS	127	244	0	3	349	339	228	0	102	1	1	2
	NL	*NT*	*NR*	*SL*	*ST*	*SR*	*EL*	*ET*	*ER*	*WL*	*WT*	*WR*

PM Peak Hr Begins at: 1645 PM

PEAK VOLUMES =	67	139	0	0	215	209	129	0	52	1	0	0
PEAK HR. FACTOR:		0.888			0.914			0.823			0.250	

NATIONAL DATA AND SURVEYING SERVICES

Axle Count

Project # 11-6101-003 Class

Location: Campus St & Prospect Ave City: Loma Linda Date: 10/13/2011 Day: Thursday

CONTROL: Signalized

		NL	NT	NR	SL	ST	SR	EL	ET	ER	WL	WT	WR
	LANES:	1	1	0	0	1	1	0	1	0	0	1	0
7:00	CARS	26	54	0	0	24	16	2	0	2	0	0	0
	2-Axle Trucks	0	3	0	3	2	0	0	0	0	0	0	0
	3-Axle Trucks	0	0	0	0	0	0	0	0	0	0	0	0
	4-Axle Trucks	0	0	0	0	0	0	0	0	0	0	0	0
	5-Axle+ Trucks	0	0	0	0	0	0	0	0	0	0	0	0
7:15	CARS	45	68	0	0	40	9	2	0	11	0	0	0
	2-Axle Trucks	0	3	0	2	2	0	0	0	0	0	0	0
	3-Axle Trucks	0	0	0	0	0	0	0	0	0	0	0	0
	4-Axle Trucks	0	0	0	0	0	0	0	0	0	0	0	0
	5-Axle+ Trucks	0	0	0	0	0	0	0	0	0	0	0	0
7:30	CARS	51	124	0	0	41	9	2	0	11	0	0	0
	2-Axle Trucks	0	0	0	1	0	0	0	0	1	0	0	0
	3-Axle Trucks	0	0	0	0	0	0	0	0	0	0	0	0
	4-Axle Trucks	0	0	0	0	0	0	0	0	0	0	0	0
	5-Axle+ Trucks	0	0	0	0	0	0	0	0	0	0	0	0
7:45	CARS	44	108	0	0	49	5	3	0	14	0	0	0
	2-Axle Trucks	0	1	0	0	0	0	0	0	0	0	0	0
	3-Axle Trucks	0	0	0	0	0	0	0	0	0	0	0	0
	4-Axle Trucks	0	0	0	0	0	0	0	0	0	0	0	0
	5-Axle+ Trucks	0	0	0	0	0	0	0	0	0	0	0	0
8:00	CARS	32	96	0	0	21	12	2	0	5	0	0	0
	2-Axle Trucks	0	2	0	0	2	0	0	0	1	0	0	0
	3-Axle Trucks	0	0	0	0	0	0	0	0	0	0	0	0
	4-Axle Trucks	0	0	0	0	0	0	0	0	0	0	0	0
	5-Axle+ Trucks	0	0	0	0	0	0	0	0	0	0	0	0
8:15	CARS	19	65	0	0	25	4	1	0	5	0	0	0
	2-Axle Trucks	0	2	0	1	2	0	0	0	0	0	0	0
	3-Axle Trucks	0	0	0	0	0	0	0	0	0	0	0	0
	4-Axle Trucks	0	0	0	0	0	0	0	0	0	0	0	0
	5-Axle+ Trucks	0	0	0	0	0	0	0	0	0	0	0	0
8:30	CARS	9	50	1	0	37	5	3	0	2	0	0	0
	2-Axle Trucks	0	1	0	0	1	0	0	0	1	0	0	0
	3-Axle Trucks	0	0	0	0	0	0	0	0	0	0	0	0
	4-Axle Trucks	0	0	0	0	0	0	0	0	0	0	0	0
	5-Axle+ Trucks	0	0	0	0	0	0	0	0	0	0	0	0
8:45	CARS	15	46	0	0	38	4	1	0	2	0	0	0
	2-Axle Trucks	0	0	0	0	3	0	0	0	1	0	0	0
	3-Axle Trucks	0	0	0	0	0	0	0	0	0	0	0	0
	4-Axle Trucks	0	0	0	0	0	0	0	0	0	0	0	0
	5-Axle+ Trucks	0	0	0	0	0	0	0	0	0	0	0	0

MOVEMENT TOTALS

	NL	NT	NR	SL	ST	SR	EL	ET	ER	WL	WT	WR
CARS	241	611	1	0	275	64	16	0	52	0	0	0
2-Axle Trucks	0	12	0	7	12	0	0	0	4	0	0	0
3-Axle Trucks	0	0	0	0	0	0	0	0	0	0	0	0
4-Axle Trucks	0	0	0	0	0	0	0	0	0	0	0	0
5-Axle+ Trucks	0	0	0	0	0	0	0	0	0	0	0	0
TOTALS	241	623	1	7	287	64	16	0	56	0	0	0
	NL	*NT*	*NR*	*SL*	*ST*	*SR*	*EL*	*ET*	*ER*	*WL*	*WT*	*WR*

AM Peak Hr Begins at: 715 AM

PEAK VOLUMES =	172	402	0	3	155	35	9	0	43	0	0	0
PEAK HR. FACTOR:		0.820			0.894			0.765			0.000	

NATIONAL DATA AND SURVEYING SERVICES

Axle Count

Project # 11-6101-003 Class

Location: Campus St & Prospect Ave City: Loma Linda Date: 10/13/2011 Day: Thursday

CONTROL: Signalized

		NL	NT	NR	SL	ST	SR	EL	ET	ER	WL	WT	WR
	LANES:	1	1	0	0	1	1	0	1	0	0	1	0
16:00	CARS	2	43	0	0	56	3	2	0	28	0	0	0
	2-Axle Trucks	0	1	0	1	2	0	0	0	1	0	0	0
	3-Axle Trucks	0	0	0	0	0	0	0	0	0	0	0	0
	4-Axle Trucks	0	0	0	0	0	0	0	0	0	0	0	0
	5-Axle+ Trucks	0	0	0	0	0	0	0	0	0	0	0	0
16:15	CARS	5	34	1	0	42	7	4	0	26	1	0	0
	2-Axle Trucks	0	5	0	0	1	0	0	0	0	0	0	0
	3-Axle Trucks	0	0	0	0	0	0	0	0	0	0	0	0
	4-Axle Trucks	0	0	0	0	0	0	0	0	0	0	0	0
	5-Axle+ Trucks	0	0	0	0	0	0	0	0	0	0	0	0
16:30	CARS	7	32	0	0	61	8	2	0	49	0	0	0
	2-Axle Trucks	0	8	0	0	3	0	0	0	0	0	0	0
	3-Axle Trucks	0	0	0	0	0	0	0	0	0	0	0	0
	4-Axle Trucks	0	0	0	0	0	0	0	0	0	0	0	0
	5-Axle+ Trucks	0	0	0	0	0	0	0	0	0	0	0	0
16:45	CARS	5	43	0	0	61	9	2	0	34	0	0	0
	2-Axle Trucks	0	3	0	0	2	0	0	0	0	0	0	0
	3-Axle Trucks	0	0	0	0	0	0	0	0	0	0	0	0
	4-Axle Trucks	0	0	0	0	0	0	0	0	0	0	0	0
	5-Axle+ Trucks	0	0	0	0	0	0	0	0	0	0	0	0
17:00	CARS	5	29	0	0	63	3	2	0	35	0	0	0
	2-Axle Trucks	0	7	1	0	4	0	0	0	0	0	0	0
	3-Axle Trucks	0	0	0	0	0	0	0	0	0	0	0	0
	4-Axle Trucks	0	0	0	0	0	0	0	0	0	0	0	0
	5-Axle+ Trucks	0	0	0	0	0	0	0	0	0	0	0	0
17:15	CARS	7	34	0	0	64	2	3	0	18	0	0	0
	2-Axle Trucks	0	7	0	0	4	0	0	0	0	0	0	0
	3-Axle Trucks	0	0	0	0	0	0	0	0	0	0	0	0
	4-Axle Trucks	0	0	0	0	0	0	0	0	0	0	0	0
	5-Axle+ Trucks	0	0	0	0	0	0	0	0	0	0	0	0
17:30	CARS	9	39	0	0	73	3	4	0	19	0	0	0
	2-Axle Trucks	0	2	0	0	5	0	0	0	0	0	0	0
	3-Axle Trucks	0	0	0	0	0	0	0	0	0	0	0	0
	4-Axle Trucks	0	0	0	0	0	0	0	0	0	0	0	0
	5-Axle+ Trucks	0	0	0	0	0	0	0	0	0	0	0	0
17:45	CARS	11	40	0	0	56	3	4	0	19	0	0	0
	2-Axle Trucks	0	2	0	0	1	0	0	0	0	0	0	0
	3-Axle Trucks	0	0	0	0	0	0	0	0	0	0	0	0
	4-Axle Trucks	0	0	0	0	0	0	0	0	0	0	0	0
	5-Axle+ Trucks	0	0	0	0	0	0	0	0	0	0	0	0

MOVEMENT TOTALS

	NL	NT	NR	SL	ST	SR	EL	ET	ER	WL	WT	WR
CARS	51	294	1	0	476	38	23	0	228	1	0	0
2-Axle Trucks	0	35	1	1	22	0	0	0	1	0	0	0
3-Axle Trucks	0	0	0	0	0	0	0	0	0	0	0	0
4-Axle Trucks	0	0	0	0	0	0	0	0	0	0	0	0
5-Axle+ Trucks	0	0	0	0	0	0	0	0	0	0	0	0
TOTALS	51	329	2	1	498	38	23	0	229	1	0	0

PM Peak Hr Begins at: 1630 PM

PEAK VOLUMES =	24	163	1	0	262	22	9	0	136	0	0	0
PEAK HR. FACTOR:		0.922			0.986			0.711			0.000	

Counts Unlimited Inc.
PO Box 1178
Corona, CA 92878
(951) 268-6268

City of Loma Linda
N/S: Campus Street
E/W: San Juan Street
Weather: Sunny

File Name : LMLCASJAM
Site Code : 00000001
Start Date : 10/11/2011
Page No : 1

Groups Printed- Passenger Vehicles - Large 2 Axle Vehicles - 3 Axle Vehicles - 4+ Axle Trucks

	Campus Street Southbound			Campus Street Northbound			San Juan Street Eastbound			
Start Time	Thru	Right	App. Total	Left	Thru	App. Total	Left	Right	App. Total	Int. Total
07:00 AM	36	2	38	7	104	111	0	4	4	153
07:15 AM	44	1	45	6	99	105	0	6	6	156
07:30 AM	59	3	62	11	101	112	0	2	2	176
07:45 AM	51	1	52	27	186	213	0	5	5	270
Total	190	7	197	51	490	541	0	17	17	755
08:00 AM	38	2	40	15	218	233	0	3	3	276
08:15 AM	36	0	36	1	142	143	2	3	5	184
08:30 AM	29	3	32	3	200	203	1	3	4	239
08:45 AM	45	1	46	5	72	77	0	4	4	127
Total	148	6	154	24	632	656	3	13	16	826
Grand Total	338	13	351	75	1122	1197	3	30	33	1581
Apprch %	96.3	3.7		6.3	93.7		9.1	90.9		
Total %	21.4	0.8	22.2	4.7	71	75.7	0.2	1.9	2.1	
Passenger Vehicles	311	13	324	74	1081	1155	3	30	33	1512
% Passenger Vehicles	92	100	92.3	98.7	96.3	96.5	100	100	100	95.6
Large 2 Axle Vehicles	26	0	26	1	39	40	0	0	0	66
% Large 2 Axle Vehicles	7.7	0	7.4	1.3	3.5	3.3	0	0	0	4.2
3 Axle Vehicles	0	0	0	0	0	0	0	0	0	0
% 3 Axle Vehicles	0	0	0	0	0	0	0	0	0	0
4+ Axle Trucks	1	0	1	0	2	2	0	0	0	3
% 4+ Axle Trucks	0.3	0	0.3	0	0.2	0.2	0	0	0	0.2

	Campus Street Southbound			Campus Street Northbound			San Juan Street Eastbound			
Start Time	Thru	Right	App. Total	Left	Thru	App. Total	Left	Right	App. Total	Int. Total
Peak Hour Analysis From 07:45 AM to 08:30 AM - Peak 1 of 1										
Peak Hour for Entire Intersection Begins at 07:45 AM										
07:45 AM	**51**	1	**52**	**27**	186	213	0	**5**	**5**	270
08:00 AM	38	2	40	15	**218**	**233**	0	3	3	**276**
08:15 AM	36	0	36	1	142	143	**2**	3	5	184
08:30 AM	29	**3**	32	3	200	203	1	3	4	239
Total Volume	154	6	160	46	746	792	3	14	17	969
% App. Total	96.2	3.8		5.8	94.2		17.6	82.4		
PHF	.755	.500	.769	.426	.856	.850	.375	.700	.850	.878

Counts Unlimited Inc.
PO Box 1178
Corona, CA 92878
(951) 268-6268

City of Loma Linda
N/S: Campus Street
E/W: San Juan Street
Weather: Sunny

File Name : LMLCASJAM
Site Code : 00000001
Start Date : 10/11/2011
Page No : 2

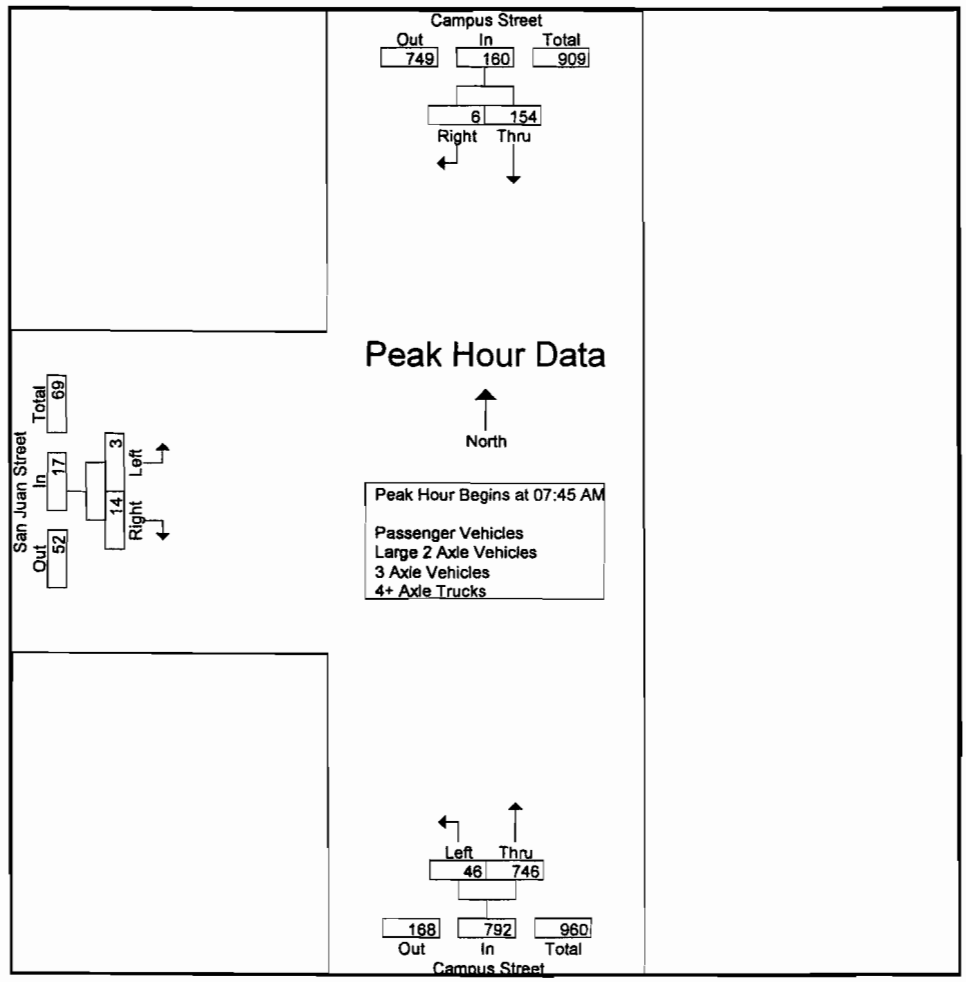

Peak Hour Analysis From 07:45 AM to 08:30 AM - Peak 1 of 1

Peak Hour for Each Approach Begins at:

	07:45 AM			07:45 AM			07:45 AM		
+0 mins.	**51**	1	**52**	**27**	186	213	0	**5**	**5**
+15 mins.	38	2	40	15	**218**	**233**	0	3	3
+30 mins.	36	0	36	1	142	143	**2**	3	5
+45 mins.	29	**3**	32	3	200	203	1	3	4
Total Volume	154	6	160	46	746	792	3	14	17
% App. Total	96.2	3.8		5.8	94.2		17.6	82.4	
PHF	.755	.500	.769	.426	.856	.850	.375	.700	.850

Counts Unlimited Inc.
PO Box 1178
Corona, CA 92878
(951) 268-6268

City of Loma Linda
N/S: Campus Street
E/W: San Juan Street
Weather: Sunny

File Name : LMLCASJAM
Site Code : 00000001
Start Date : 10/11/2011
Page No : 1

Groups Printed- Passenger Vehicles

	Campus Street Southbound			Campus Street Northbound			San Juan Street Eastbound			
Start Time	Thru	Right	App. Total	Left	Thru	App. Total	Left	Right	App. Total	Int. Total
07:00 AM	32	2	34	7	96	103	0	4	4	141
07:15 AM	42	1	43	6	94	100	0	6	6	149
07:30 AM	53	3	56	11	96	107	0	2	2	165
07:45 AM	48	1	49	27	183	210	0	5	5	264
Total	175	7	182	51	469	520	0	17	17	719
08:00 AM	36	2	38	14	215	229	0	3	3	270
08:15 AM	32	0	32	1	134	135	2	3	5	172
08:30 AM	26	3	29	3	195	198	1	3	4	231
08:45 AM	42	1	43	5	68	73	0	4	4	120
Total	136	6	142	23	612	635	3	13	16	793
Grand Total	311	13	324	74	1081	1155	3	30	33	1512
Apprch %	96	4		6.4	93.6		9.1	90.9		
Total %	20.6	0.9	21.4	4.9	71.5	76.4	0.2	2	2.2	

	Campus Street Southbound			Campus Street Northbound			San Juan Street Eastbound			
Start Time	Thru	Right	App. Total	Left	Thru	App. Total	Left	Right	App. Total	Int. Total
Peak Hour Analysis From 07:45 AM to 08:30 AM - Peak 1 of 1										
Peak Hour for Entire Intersection Begins at 07:45 AM										
07:45 AM	**48**	1	**49**	**27**	183	210	0	**5**	**5**	264
08:00 AM	36	2	38	14	**215**	**229**	0	3	3	**270**
08:15 AM	32	0	32	1	134	135	**2**	3	5	172
08:30 AM	26	**3**	29	3	195	198	1	3	4	231
Total Volume	142	6	148	45	727	772	3	14	17	937
% App. Total	95.9	4.1		5.8	94.2		17.6	82.4		
PHF	.740	.500	.755	.417	.845	.843	.375	.700	.850	.868

Counts Unlimited Inc.
PO Box 1178
Corona, CA 92878
(951) 268-6268

City of Loma Linda
N/S: Campus Street
E/W: San Juan Street
Weather: Sunny

File Name : LMLCASJAM
Site Code : 00000001
Start Date : 10/11/2011
Page No : 2

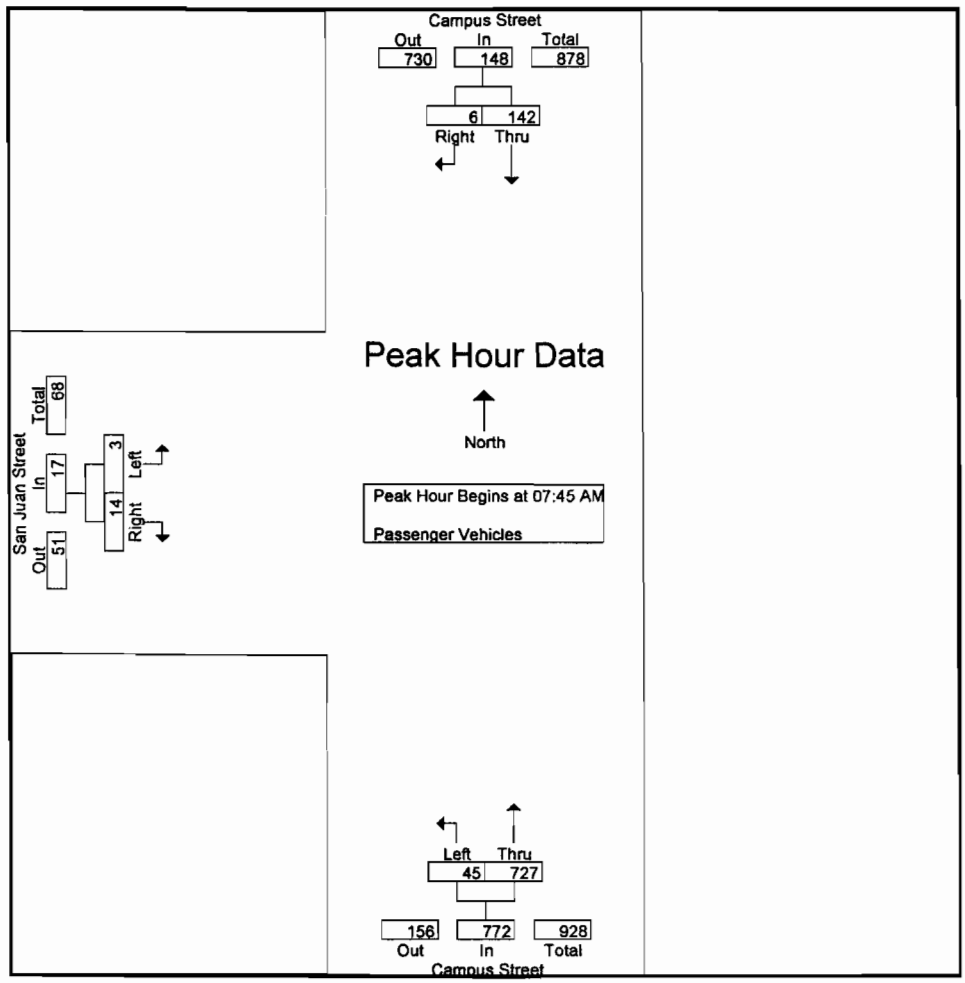

Peak Hour Analysis From 07:45 AM to 08:30 AM - Peak 1 of 1

Peak Hour for Each Approach Begins at:

	07:45 AM			07:45 AM			07:45 AM		
+0 mins.	**48**	1	**49**	**27**	183	210	0	**5**	**5**
+15 mins.	36	2	38	14	**215**	**229**	0	3	3
+30 mins.	32	0	32	1	134	135	**2**	3	5
+45 mins.	26	**3**	29	3	195	198	1	3	4
Total Volume	142	6	148	45	727	772	3	14	17
% App. Total	95.9	4.1		5.8	94.2		17.6	82.4	
PHF	.740	.500	.755	.417	.845	.843	.375	.700	.850

Counts Unlimited Inc.
PO Box 1178
Corona, CA 92878
(951) 268-6268

City of Loma Linda
N/S: Campus Street
E/W: San Juan Street
Weather: Sunny

File Name : LMLCASJAM
Site Code : 00000001
Start Date : 10/11/2011
Page No : 1

Groups Printed- Large 2 Axle Vehicles

	Campus Street Southbound			Campus Street Northbound			San Juan Street Eastbound			
Start Time	Thru	Right	App. Total	Left	Thru	App. Total	Left	Right	App. Total	Int. Total
07:00 AM	4	0	4	0	8	8	0	0	0	12
07:15 AM	1	0	1	0	5	5	0	0	0	6
07:30 AM	6	0	6	0	5	5	0	0	0	11
07:45 AM	3	0	3	0	3	3	0	0	0	6
Total	14	0	14	0	21	21	0	0	0	35
08:00 AM	2	0	2	1	3	4	0	0	0	6
08:15 AM	4	0	4	0	7	7	0	0	0	11
08:30 AM	3	0	3	0	5	5	0	0	0	8
08:45 AM	3	0	3	0	3	3	0	0	0	6
Total	12	0	12	1	18	19	0	0	0	31
Grand Total	26	0	26	1	39	40	0	0	0	66
Apprch %	100	0		2.5	97.5		0	0		
Total %	39.4	0	39.4	1.5	59.1	60.6	0	0	0	

	Campus Street Southbound			Campus Street Northbound			San Juan Street Eastbound			
Start Time	Thru	Right	App. Total	Left	Thru	App. Total	Left	Right	App. Total	Int. Total
Peak Hour Analysis From 07:45 AM to 08:30 AM - Peak 1 of 1										
Peak Hour for Entire Intersection Begins at 07:45 AM										
07:45 AM	3	0	3	0	3	3	0	0	0	6
08:00 AM	2	0	2	1	3	4	0	0	0	6
08:15 AM	4	0	4	0	7	7	0	0	0	11
08:30 AM	3	0	3	0	5	5	0	0	0	8
Total Volume	12	0	12	1	18	19	0	0	0	31
% App. Total	100	0		5.3	94.7		0	0		
PHF	.750	.000	.750	.250	.643	.679	.000	.000	.000	.705

Counts Unlimited Inc.
PO Box 1178
Corona, CA 92878
(951) 268-6268

City of Loma Linda
N/S: Campus Street
E/W: San Juan Street
Weather: Sunny

File Name : LMLCASJAM
Site Code : 00000001
Start Date : 10/11/2011
Page No : 2

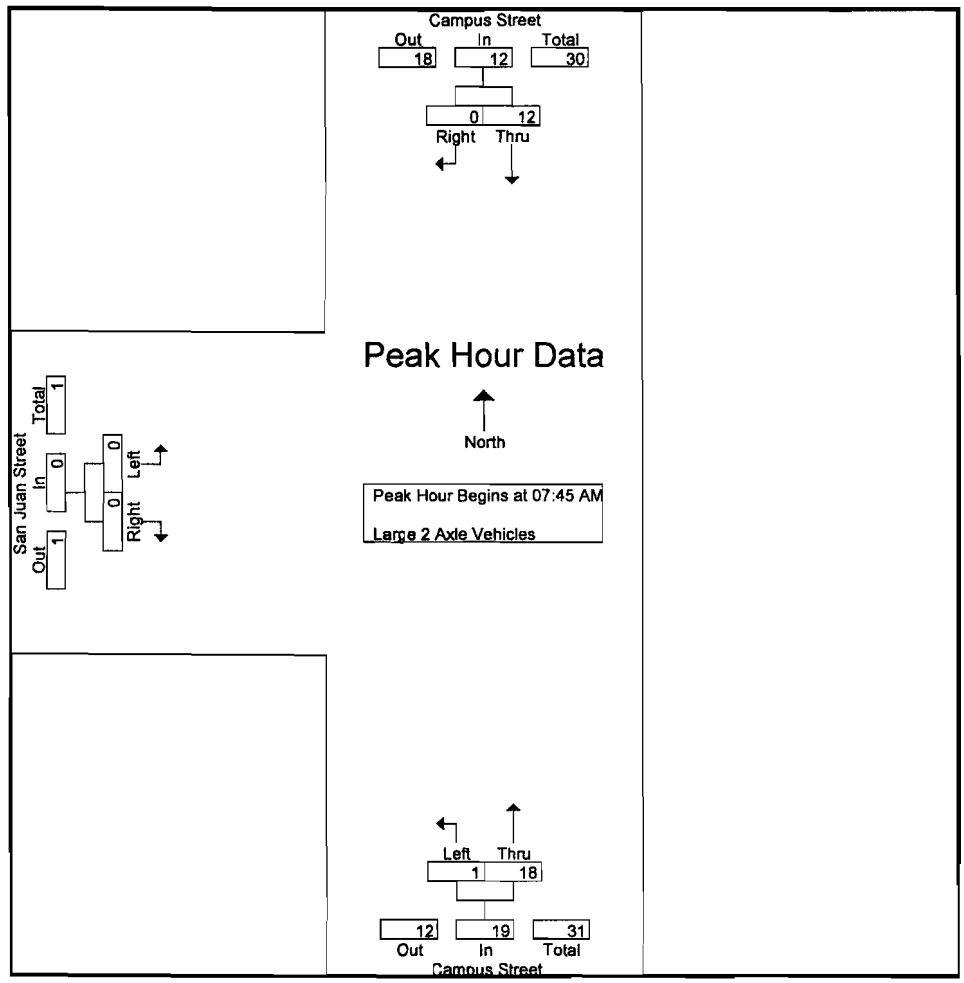

Peak Hour Analysis From 07:45 AM to 08:30 AM - Peak 1 of 1

Peak Hour for Each Approach Begins at:

	07:45 AM			07:45 AM			07:45 AM		
+0 mins.	3	0	3	0	3	3	0	0	0
+15 mins.	2	0	2	1	3	4	0	0	0
+30 mins.	4	0	4	0	7	7	0	0	0
+45 mins.	3	0	3	0	5	5	0	0	0
Total Volume	12	0	12	1	18	19	0	0	0
% App. Total	100	0		5.3	94.7		0	0	
PHF	.750	.000	.750	.250	.643	.679	.000	.000	.000

Counts Unlimited Inc.
PO Box 1178
Corona, CA 92878
(951) 268-6268

City of Loma Linda
N/S: Campus Street
E/W: San Juan Street
Weather: Sunny

File Name : LMLCASJAM
Site Code : 00000001
Start Date : 10/11/2011
Page No : 1

Groups Printed- 3 Axle Vehicles

	Campus Street Southbound			Campus Street Northbound			San Juan Street Eastbound			
Start Time	Thru	Right	App. Total	Left	Thru	App. Total	Left	Right	App. Total	Int. Total
07:00 AM	0	0	0	0	0	0	0	0	0	0
07:15 AM	0	0	0	0	0	0	0	0	0	0
07:30 AM	0	0	0	0	0	0	0	0	0	0
07:45 AM	0	0	0	0	0	0	0	0	0	0
Total	0	0	0	0	0	0	0	0	0	0
08:00 AM	0	0	0	0	0	0	0	0	0	0
08:15 AM	0	0	0	0	0	0	0	0	0	0
08:30 AM	0	0	0	0	0	0	0	0	0	0
08:45 AM	0	0	0	0	0	0	0	0	0	0
Total	0	0	0	0	0	0	0	0	0	0
Grand Total	0	0	0	0	0	0	0	0	0	0
Apprch %	0	0		0	0		0	0		
Total %										

	Campus Street Southbound			Campus Street Northbound			San Juan Street Eastbound			
Start Time	Thru	Right	App. Total	Left	Thru	App. Total	Left	Right	App. Total	Int. Total
Peak Hour Analysis From 07:45 AM to 08:30 AM - Peak 1 of 1										
Peak Hour for Entire Intersection Begins at 07:45 AM										
07:45 AM	0	0	0	0	0	0	0	0	0	0
08:00 AM	0	0	0	0	0	0	0	0	0	0
08:15 AM	0	0	0	0	0	0	0	0	0	0
08:30 AM	0	0	0	0	0	0	0	0	0	0
Total Volume	0	0	0	0	0	0	0	0	0	0
% App. Total	0	0		0	0		0	0		
PHF	.000	.000	.000	.000	.000	.000	.000	.000	.000	.000

Counts Unlimited Inc.
PO Box 1178
Corona, CA 92878
(951) 268-6268

City of Loma Linda
N/S: Campus Street
E/W: San Juan Street
Weather: Sunny

File Name : LMLCASJAM
Site Code : 00000001
Start Date : 10/11/2011
Page No : 2

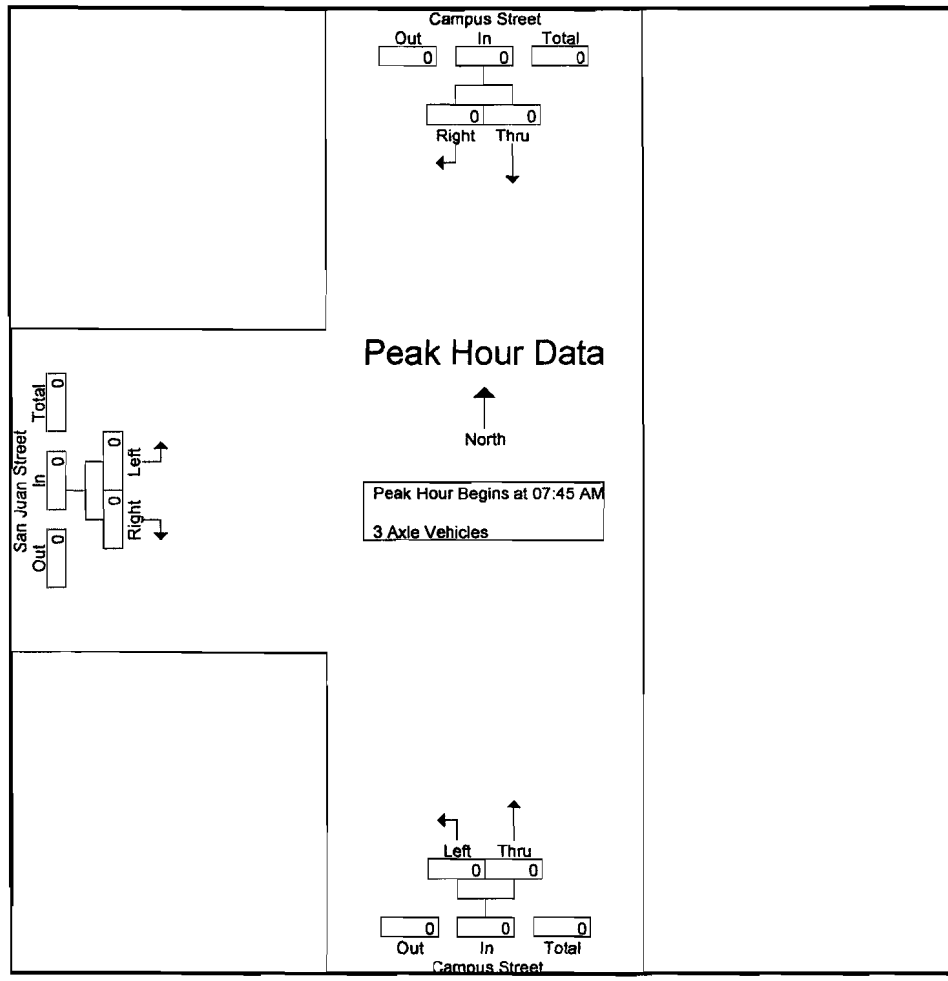

Peak Hour Analysis From 07:45 AM to 08:30 AM - Peak 1 of 1

Peak Hour for Each Approach Begins at:

	07:45 AM			07:45 AM			07:45 AM		
+0 mins.	0	0	0	0	0	0	0	0	0
+15 mins.	0	0	0	0	0	0	0	0	0
+30 mins.	0	0	0	0	0	0	0	0	0
+45 mins.	0	0	0	0	0	0	0	0	0
Total Volume	0	0	0	0	0	0	0	0	0
% App. Total	0	0		0	0		0	0	
PHF	.000	.000	.000	.000	.000	.000	.000	.000	.000

Counts Unlimited Inc.
PO Box 1178
Corona, CA 92878
(951) 268-6268

City of Loma Linda
N/S: Campus Street
E/W: San Juan Street
Weather: Sunny

File Name : LMLCASJAM
Site Code : 00000001
Start Date : 10/11/2011
Page No : 1

Groups Printed- 4+ Axle Trucks

	Campus Street Southbound			Campus Street Northbound			San Juan Street Eastbound			
Start Time	Thru	Right	App. Total	Left	Thru	App. Total	Left	Right	App. Total	Int. Total
07:00 AM	0	0	0	0	0	0	0	0	0	0
07:15 AM	1	0	1	0	0	0	0	0	0	1
07:30 AM	0	0	0	0	0	0	0	0	0	0
07:45 AM	0	0	0	0	0	0	0	0	0	0
Total	1	0	1	0	0	0	0	0	0	1
08:00 AM	0	0	0	0	0	0	0	0	0	0
08:15 AM	0	0	0	0	1	1	0	0	0	1
08:30 AM	0	0	0	0	0	0	0	0	0	0
08:45 AM	0	0	0	0	1	1	0	0	0	1
Total	0	0	0	0	2	2	0	0	0	2
Grand Total	1	0	1	0	2	2	0	0	0	3
Apprch %	100	0		0	100		0	0		
Total %	33.3	0	33.3	0	66.7	66.7	0	0	0	

	Campus Street Southbound			Campus Street Northbound			San Juan Street Eastbound			
Start Time	Thru	Right	App. Total	Left	Thru	App. Total	Left	Right	App. Total	Int. Total
Peak Hour Analysis From 07:45 AM to 08:30 AM - Peak 1 of 1										
Peak Hour for Entire Intersection Begins at 07:45 AM										
07:45 AM	0	0	0	0	0	0	0	0	0	0
08:00 AM	0	0	0	0	0	0	0	0	0	0
08:15 AM	0	0	0	0	1	1	0	0	0	1
08:30 AM	0	0	0	0	0	0	0	0	0	0
Total Volume	0	0	0	0	1	1	0	0	0	1
% App. Total	0	0		0	100		0	0		
PHF	.000	.000	.000	.000	.250	.250	.000	.000	.000	.250

Counts Unlimited Inc.
PO Box 1178
Corona, CA 92878
(951) 268-6268

City of Loma Linda
N/S: Campus Street
E/W: San Juan Street
Weather: Sunny

File Name : LMLCASJAM
Site Code : 00000001
Start Date : 10/11/2011
Page No : 2

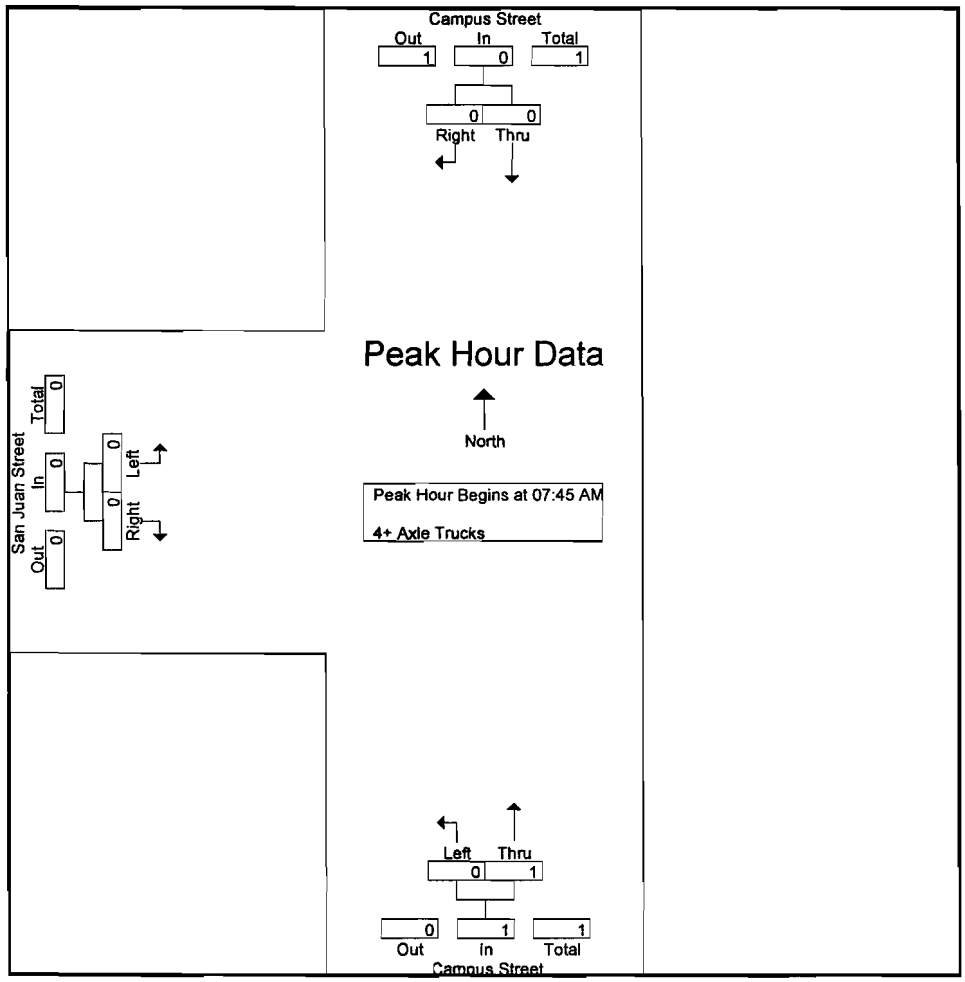

Peak Hour Analysis From 07:45 AM to 08:30 AM - Peak 1 of 1

Peak Hour for Each Approach Begins at:

	07:45 AM			07:45 AM			07:45 AM		
+0 mins.	0	0	0	0	0	0	0	0	0
+15 mins.	0	0	0	0	0	0	0	0	0
+30 mins.	0	0	0	0	1	1	0	0	0
+45 mins.	0	0	0	0	0	0	0	0	0
Total Volume	0	0	0	0	1	1	0	0	0
% App. Total	0	0		0	100		0	0	
PHF	.000	.000	.000	.000	.250	.250	.000	.000	.000

Counts Unlimited Inc.
PO Box 1178
Corona, CA 92878
(951) 268-6268

City of Loma Linda
N/S: Campus Street
E/W: San Juan Street
Weather: Sunny

File Name : LMLCASJPM
Site Code : 00000001
Start Date : 10/11/2011
Page No : 1

Groups Printed- Passenger Vehicles - Large 2 Axle Vehicles - 3 Axle Vehicles - 4+ Axle Trucks

	Campus Street Southbound			Campus Street Northbound			San Juan Street Eastbound			
Start Time	Thru	Right	App. Total	Left	Thru	App. Total	Left	Right	App. Total	Int. Total
04:00 PM	98	3	101	5	47	52	0	6	6	159
04:15 PM	80	3	83	1	37	38	0	3	3	124
04:30 PM	114	1	115	3	40	43	0	7	7	165
04:45 PM	115	2	117	6	58	64	0	3	3	184
Total	407	9	416	15	182	197	0	19	19	632
05:00 PM	148	1	149	5	52	57	1	5	6	212
05:15 PM	167	1	168	7	62	69	0	3	3	240
05:30 PM	121	1	122	1	52	53	0	2	2	177
05:45 PM	95	1	96	8	55	63	1	3	4	163
Total	531	4	535	21	221	242	2	13	15	792
Grand Total	938	13	951	36	403	439	2	32	34	1424
Apprch %	98.6	1.4		8.2	91.8		5.9	94.1		
Total %	65.9	0.9	66.8	2.5	28.3	30.8	0.1	2.2	2.4	
Passenger Vehicles	879	13	892	34	353	387	2	32	34	1313
% Passenger Vehicles	93.7	100	93.8	94.4	87.6	88.2	100	100	100	92.2
Large 2 Axle Vehicles	59	0	59	2	50	52	0	0	0	111
% Large 2 Axle Vehicles	6.3	0	6.2	5.6	12.4	11.8	0	0	0	7.8
3 Axle Vehicles	0	0	0	0	0	0	0	0	0	0
% 3 Axle Vehicles	0	0	0	0	0	0	0	0	0	0
4+ Axle Trucks	0	0	0	0	0	0	0	0	0	0
% 4+ Axle Trucks	0	0	0	0	0	0	0	0	0	0

	Campus Street Southbound			Campus Street Northbound			San Juan Street Eastbound			
Start Time	Thru	Right	App. Total	Left	Thru	App. Total	Left	Right	App. Total	Int. Total
Peak Hour Analysis From 04:00 PM to 05:45 PM - Peak 1 of 1										
Peak Hour for Entire Intersection Begins at 04:45 PM										
04:45 PM	115	2	117	6	58	64	0	3	3	184
05:00 PM	148	1	149	5	52	57	1	5	6	212
05:15 PM	**167**	1	**168**	**7**	**62**	**69**	0	3	3	**240**
05:30 PM	121	1	122	1	52	53	0	2	2	177
Total Volume	551	5	556	19	224	243	1	13	14	813
% App. Total	99.1	0.9		7.8	92.2		7.1	92.9		
PHF	.825	.625	.827	.679	.903	.880	.250	.650	.583	.847

Counts Unlimited Inc.
PO Box 1178
Corona, CA 92878
(951) 268-6268

City of Loma Linda
N/S: Campus Street
E/W: San Juan Street
Weather: Sunny

File Name : LMLCASJPM
Site Code : 00000001
Start Date : 10/11/2011
Page No : 2

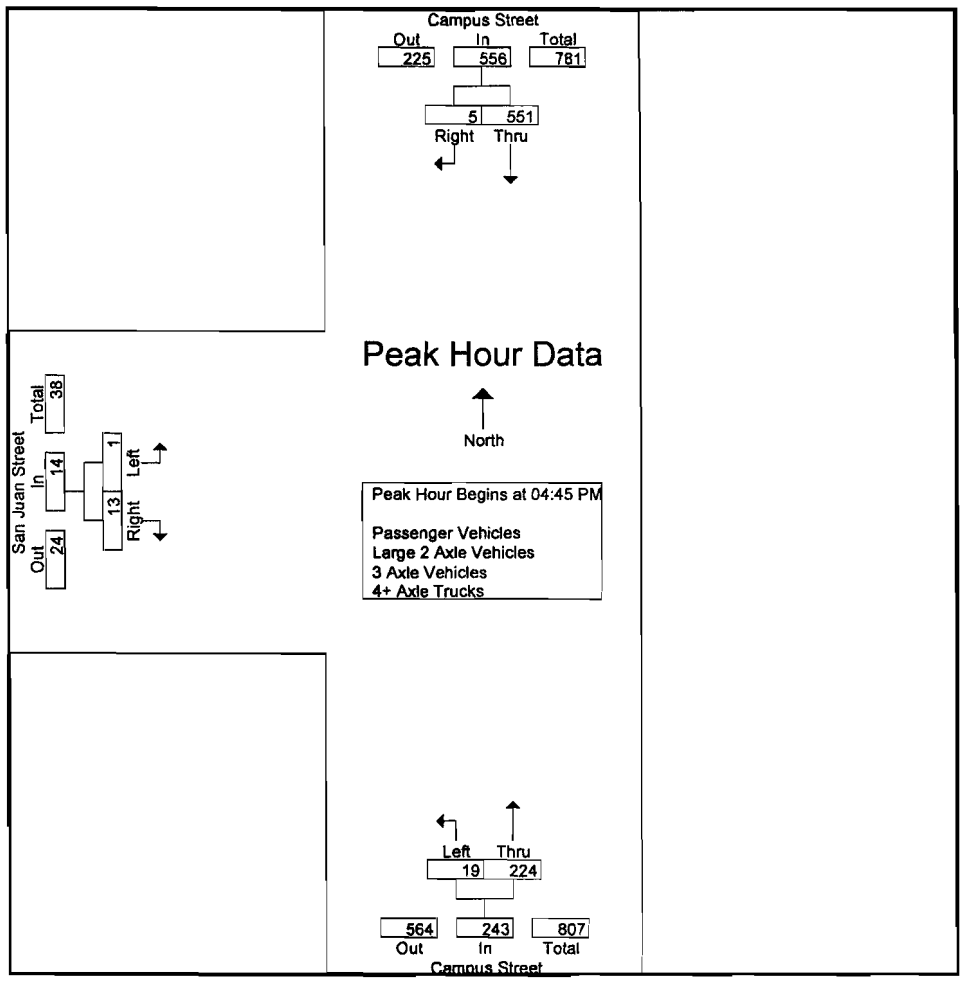

Peak Hour Analysis From 04:00 PM to 05:45 PM - Peak 1 of 1

Peak Hour for Each Approach Begins at:

	04:45 PM			04:45 PM			04:00 PM		
+0 mins.	115	2	117	6	58	64	0	6	6
+15 mins.	148	1	149	5	52	57	0	3	3
+30 mins.	**167**	1	**168**	**7**	**62**	**69**	0	**7**	**7**
+45 mins.	121	1	122	1	52	53	0	3	3
Total Volume	551	5	556	19	224	243	0	19	19
% App. Total	99.1	0.9		7.8	92.2		0	100	
PHF	.825	.625	.827	.679	.903	.880	.000	.679	.679

Counts Unlimited Inc.
PO Box 1178
Corona, CA 92878
(951) 268-6268

City of Loma Linda
N/S: Campus Street
E/W: San Juan Street
Weather: Sunny

File Name : LMLCASJPM
Site Code : 00000001
Start Date : 10/11/2011
Page No : 1

Groups Printed- Passenger Vehicles

	Campus Street Southbound			Campus Street Northbound			San Juan Street Eastbound			
Start Time	Thru	Right	App. Total	Left	Thru	App. Total	Left	Right	App. Total	Int. Total
04:00 PM	92	3	95	4	43	47	0	6	6	148
04:15 PM	75	3	78	1	27	28	0	3	3	109
04:30 PM	111	1	112	2	34	36	0	7	7	155
04:45 PM	104	2	106	6	53	59	0	3	3	168
Total	382	9	391	13	157	170	0	19	19	580
05:00 PM	139	1	140	5	46	51	1	5	6	197
05:15 PM	161	1	162	7	54	61	0	3	3	226
05:30 PM	109	1	110	1	45	46	0	2	2	158
05:45 PM	88	1	89	8	51	59	1	3	4	152
Total	497	4	501	21	196	217	2	13	15	733
Grand Total	879	13	892	34	353	387	2	32	34	1313
Apprch %	98.5	1.5		8.8	91.2		5.9	94.1		
Total %	66.9	1	67.9	2.6	26.9	29.5	0.2	2.4	2.6	

	Campus Street Southbound			Campus Street Northbound			San Juan Street Eastbound			
Start Time	Thru	Right	App. Total	Left	Thru	App. Total	Left	Right	App. Total	Int. Total
Peak Hour Analysis From 04:45 PM to 05:30 PM - Peak 1 of 1										
Peak Hour for Entire Intersection Begins at 04:45 PM										
04:45 PM	104	**2**	106	6	53	59	0	3	3	168
05:00 PM	139	1	140	5	46	51	**1**	**5**	**6**	197
05:15 PM	**161**	1	**162**	**7**	**54**	**61**	0	3	3	**226**
05:30 PM	109	1	110	1	45	46	0	2	2	158
Total Volume	513	5	518	19	198	217	1	13	14	749
% App. Total	99	1		8.8	91.2		7.1	92.9		
PHF	.797	.625	.799	.679	.917	.889	.250	.650	.583	.829

Counts Unlimited Inc.
PO Box 1178
Corona, CA 92878
(951) 268-6268

City of Loma Linda
N/S: Campus Street
E/W: San Juan Street
Weather: Sunny

File Name : LMLCASJPM
Site Code : 00000001
Start Date : 10/11/2011
Page No : 2

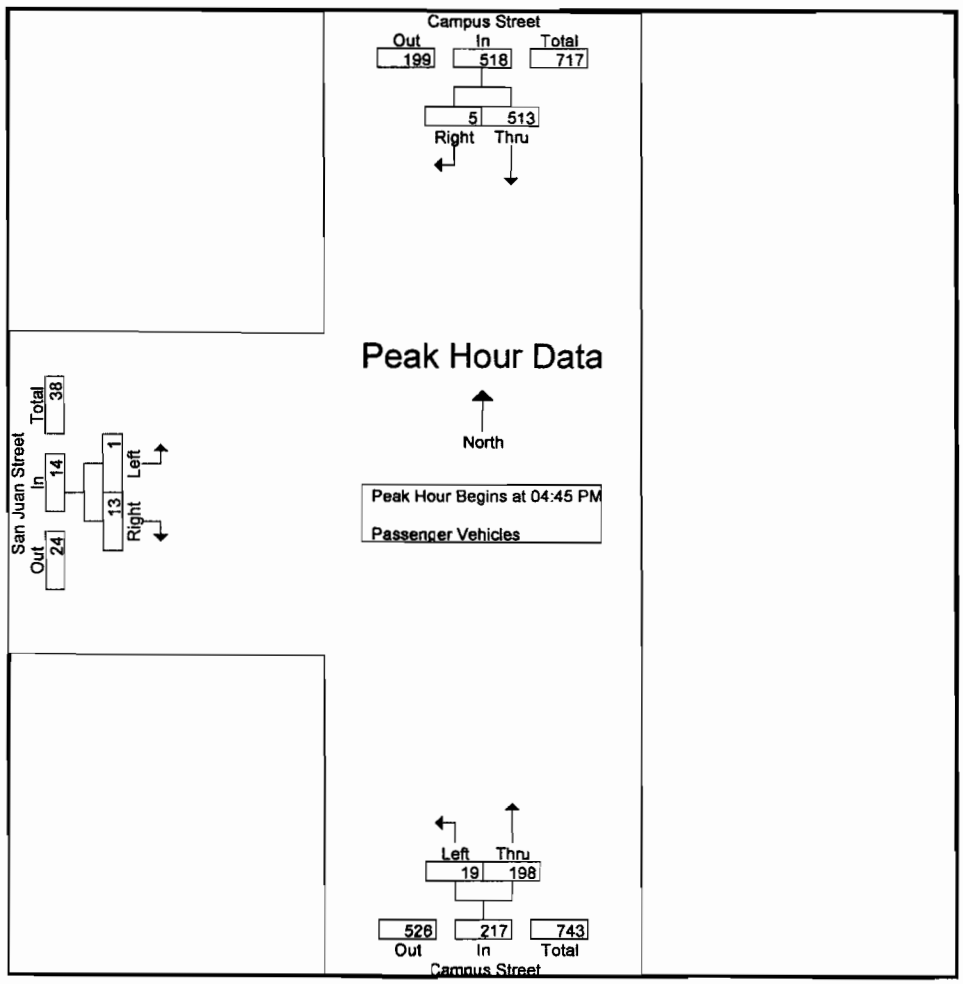

Peak Hour Analysis From 04:45 PM to 05:30 PM - Peak 1 of 1

Peak Hour for Each Approach Begins at:

	04:45 PM			04:45 PM			04:45 PM		
+0 mins.	104	2	106	6	53	59	0	3	3
+15 mins.	139	1	140	5	46	51	**1**	**5**	**6**
+30 mins.	**161**	1	**162**	**7**	**54**	**61**	0	3	3
+45 mins.	109	1	110	1	45	46	0	2	2
Total Volume	513	5	518	19	198	217	1	13	14
% App. Total	99	1		8.8	91.2		7.1	92.9	
PHF	.797	.625	.799	.679	.917	.889	.250	.650	.583

Counts Unlimited Inc.
PO Box 1178
Corona, CA 92878
(951) 268-6268

City of Loma Linda
N/S: Campus Street
E/W: San Juan Street
Weather: Sunny

File Name : LMLCASJPM
Site Code : 00000001
Start Date : 10/11/2011
Page No : 1

Groups Printed- Large 2 Axle Vehicles

	Campus Street Southbound			Campus Street Northbound			San Juan Street Eastbound			
Start Time	Thru	Right	App. Total	Left	Thru	App. Total	Left	Right	App. Total	Int. Total
04:00 PM	6	0	6	1	4	5	0	0	0	11
04:15 PM	5	0	5	0	10	10	0	0	0	15
04:30 PM	3	0	3	1	6	7	0	0	0	10
04:45 PM	11	0	11	0	5	5	0	0	0	16
Total	25	0	25	2	25	27	0	0	0	52
05:00 PM	9	0	9	0	6	6	0	0	0	15
05:15 PM	6	0	6	0	8	8	0	0	0	14
05:30 PM	12	0	12	0	7	7	0	0	0	19
05:45 PM	7	0	7	0	4	4	0	0	0	11
Total	34	0	34	0	25	25	0	0	0	59
Grand Total	59	0	59	2	50	52	0	0	0	111
Apprch %	100	0		3.8	96.2		0	0		
Total %	53.2	0	53.2	1.8	45	46.8	0	0	0	

	Campus Street Southbound			Campus Street Northbound			San Juan Street Eastbound			
Start Time	Thru	Right	App. Total	Left	Thru	App. Total	Left	Right	App. Total	Int. Total
Peak Hour Analysis From 04:45 PM to 05:30 PM - Peak 1 of 1										
Peak Hour for Entire Intersection Begins at 04:45 PM										
04:45 PM	11	0	11	0	5	5	0	0	0	16
05:00 PM	9	0	9	0	6	6	0	0	0	15
05:15 PM	6	0	6	0	**8**	**8**	0	0	0	14
05:30 PM	**12**	0	**12**	0	7	7	0	0	0	**19**
Total Volume	38	0	38	0	26	26	0	0	0	64
% App. Total	100	0		0	100		0	0		
PHF	.792	.000	.792	.000	.813	.813	.000	.000	.000	.842

Counts Unlimited Inc.
PO Box 1178
Corona, CA 92878
(951) 268-6268

City of Loma Linda
N/S: Campus Street
E/W: San Juan Street
Weather: Sunny

File Name : LMLCASJPM
Site Code : 00000001
Start Date : 10/11/2011
Page No : 2

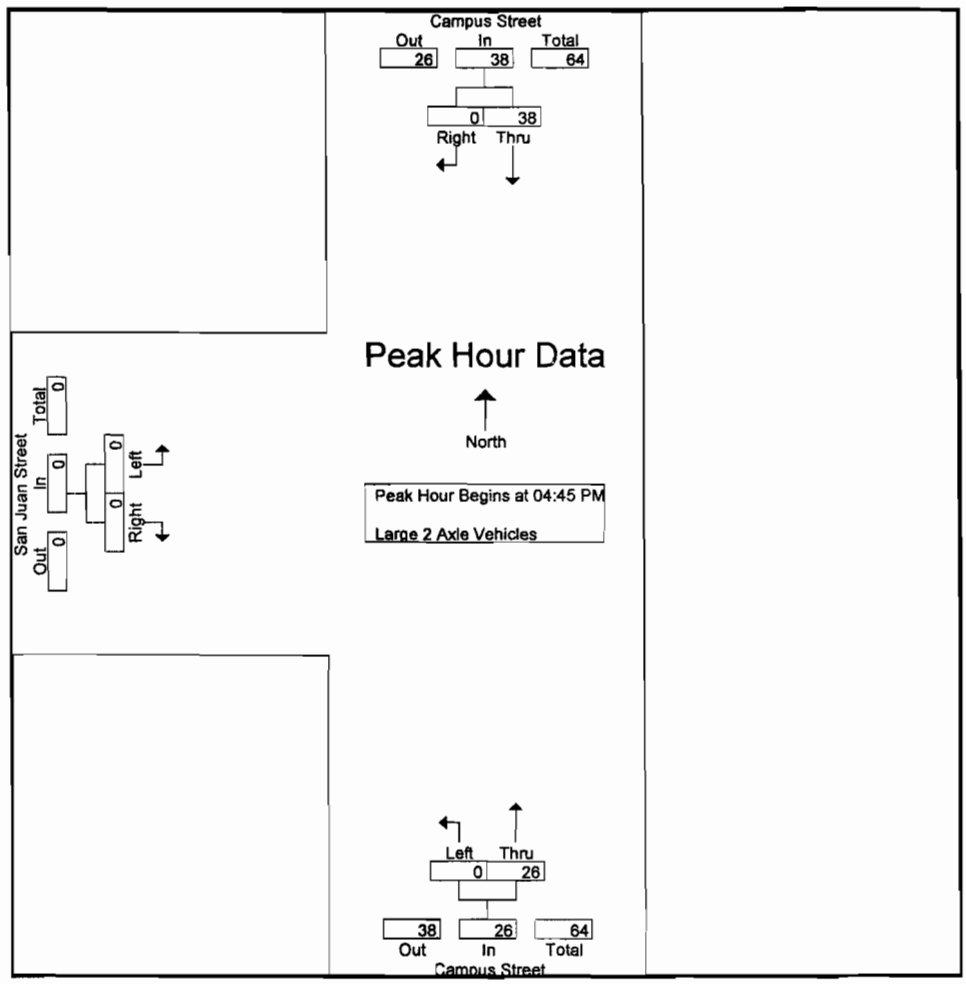

Peak Hour Analysis From 04:45 PM to 05:30 PM - Peak 1 of 1

Peak Hour for Each Approach Begins at:

	04:45 PM			04:45 PM			04:45 PM		
+0 mins.	11	0	11	0	5	5	0	0	0
+15 mins.	9	0	9	0	6	6	0	0	0
+30 mins.	6	0	6	0	8	8	0	0	0
+45 mins.	12	0	12	0	7	7	0	0	0
Total Volume	38	0	38	0	26	26	0	0	0
% App. Total	100	0		0	100		0	0	
PHF	.792	.000	.792	.000	.813	.813	.000	.000	.000

Counts Unlimited Inc.
PO Box 1178
Corona, CA 92878
(951) 268-6268

City of Loma Linda
N/S: Campus Street
E/W: San Juan Street
Weather: Sunny

File Name : LMLCASJPM
Site Code : 00000001
Start Date : 10/11/2011
Page No : 1

Groups Printed- 3 Axle Vehicles

	Campus Street Southbound			Campus Street Northbound			San Juan Street Eastbound			
Start Time	Thru	Right	App. Total	Left	Thru	App. Total	Left	Right	App. Total	Int. Total
04:00 PM	0	0	0	0	0	0	0	0	0	0
04:15 PM	0	0	0	0	0	0	0	0	0	0
04:30 PM	0	0	0	0	0	0	0	0	0	0
04:45 PM	0	0	0	0	0	0	0	0	0	0
Total	0	0	0	0	0	0	0	0	0	0
05:00 PM	0	0	0	0	0	0	0	0	0	0
05:15 PM	0	0	0	0	0	0	0	0	0	0
05:30 PM	0	0	0	0	0	0	0	0	0	0
05:45 PM	0	0	0	0	0	0	0	0	0	0
Total	0	0	0	0	0	0	0	0	0	0
Grand Total	0	0	0	0	0	0	0	0	0	0
Apprch %	0	0		0	0		0	0		
Total %										

	Campus Street Southbound			Campus Street Northbound			San Juan Street Eastbound			
Start Time	Thru	Right	App. Total	Left	Thru	App. Total	Left	Right	App. Total	Int. Total
Peak Hour Analysis From 04:45 PM to 05:30 PM - Peak 1 of 1										
Peak Hour for Entire Intersection Begins at 04:45 PM										
04:45 PM	0	0	0	0	0	0	0	0	0	0
05:00 PM	0	0	0	0	0	0	0	0	0	0
05:15 PM	0	0	0	0	0	0	0	0	0	0
05:30 PM	0	0	0	0	0	0	0	0	0	0
Total Volume	0	0	0	0	0	0	0	0	0	0
% App. Total	0	0		0	0		0	0		
PHF	.000	.000	.000	.000	.000	.000	.000	.000	.000	.000

Counts Unlimited Inc.
PO Box 1178
Corona, CA 92878
(951) 268-6268

City of Loma Linda
N/S: Campus Street
E/W: San Juan Street
Weather: Sunny

File Name : LMLCASJPM
Site Code : 00000001
Start Date : 10/11/2011
Page No : 2

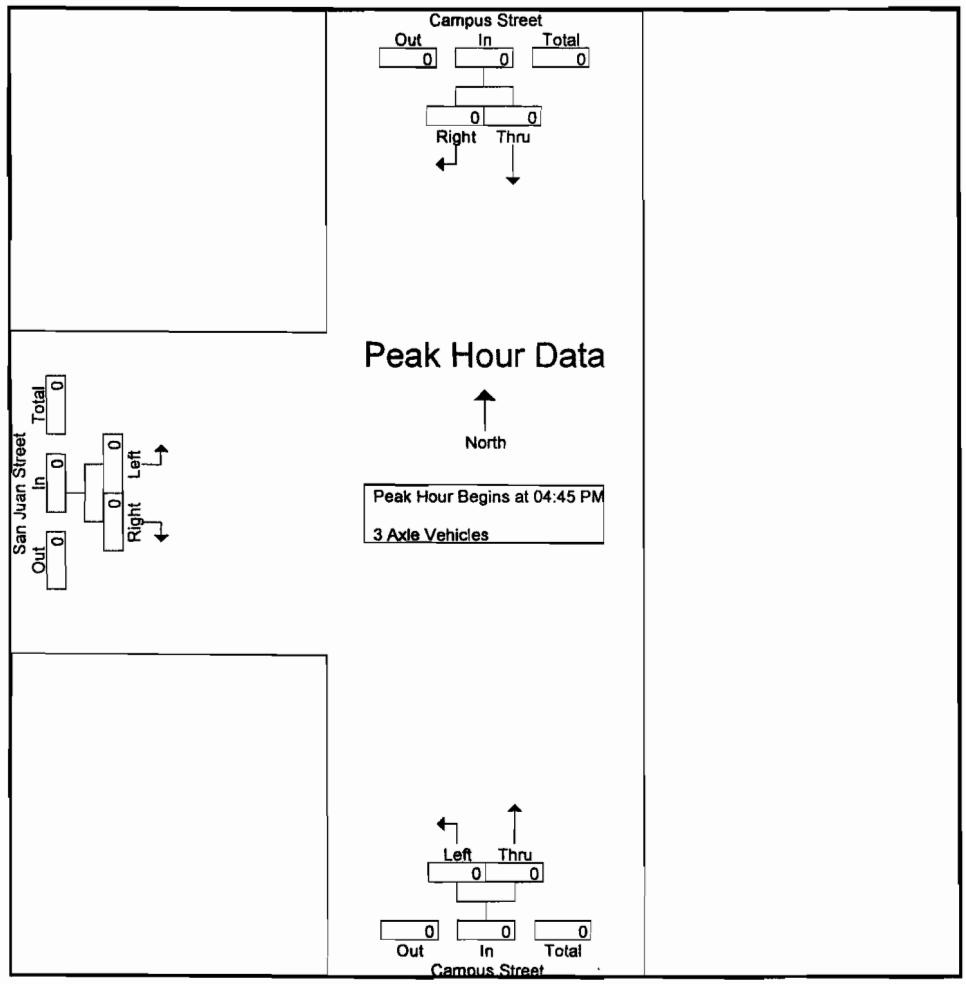

Peak Hour Analysis From 04:45 PM to 05:30 PM - Peak 1 of 1

Peak Hour for Each Approach Begins at:

	04:45 PM			04:45 PM			04:45 PM		
+0 mins.	0	0	0	0	0	0	0	0	0
+15 mins.	0	0	0	0	0	0	0	0	0
+30 mins.	0	0	0	0	0	0	0	0	0
+45 mins.	0	0	0	0	0	0	0	0	0
Total Volume	0	0	0	0	0	0	0	0	0
% App. Total	0	0		0	0		0	0	
PHF	.000	.000	.000	.000	.000	.000	.000	.000	.000

Counts Unlimited Inc.
PO Box 1178
Corona, CA 92878
(951) 268-6268

City of Loma Linda
N/S: Campus Street
E/W: San Juan Street
Weather: Sunny

File Name : LMLCASJPM
Site Code : 00000001
Start Date : 10/11/2011
Page No : 1

Groups Printed- 4+ Axle Trucks

	Campus Street Southbound			Campus Street Northbound			San Juan Street Eastbound			
Start Time	Thru	Right	App. Total	Left	Thru	App. Total	Left	Right	App. Total	Int. Total
04:00 PM	0	0	0	0	0	0	0	0	0	0
04:15 PM	0	0	0	0	0	0	0	0	0	0
04:30 PM	0	0	0	0	0	0	0	0	0	0
04:45 PM	0	0	0	0	0	0	0	0	0	0
Total	0	0	0	0	0	0	0	0	0	0
05:00 PM	0	0	0	0	0	0	0	0	0	0
05:15 PM	0	0	0	0	0	0	0	0	0	0
05:30 PM	0	0	0	0	0	0	0	0	0	0
05:45 PM	0	0	0	0	0	0	0	0	0	0
Total	0	0	0	0	0	0	0	0	0	0
Grand Total	0	0	0	0	0	0	0	0	0	0
Apprch %	0	0		0	0		0	0		
Total %										

	Campus Street Southbound			Campus Street Northbound			San Juan Street Eastbound			
Start Time	Thru	Right	App. Total	Left	Thru	App. Total	Left	Right	App. Total	Int. Total
Peak Hour Analysis From 04:45 PM to 05:30 PM - Peak 1 of 1										
Peak Hour for Entire Intersection Begins at 04:45 PM										
04:45 PM	0	0	0	0	0	0	0	0	0	0
05:00 PM	0	0	0	0	0	0	0	0	0	0
05:15 PM	0	0	0	0	0	0	0	0	0	0
05:30 PM	0	0	0	0	0	0	0	0	0	0
Total Volume	0	0	0	0	0	0	0	0	0	0
% App. Total	0	0		0	0		0	0		
PHF	.000	.000	.000	.000	.000	.000	.000	.000	.000	.000

Counts Unlimited Inc.
PO Box 1178
Corona, CA 92878
(951) 268-6268

City of Loma Linda
N/S: Campus Street
E/W: San Juan Street
Weather: Sunny

File Name : LMLCASJPM
Site Code : 00000001
Start Date : 10/11/2011
Page No : 2

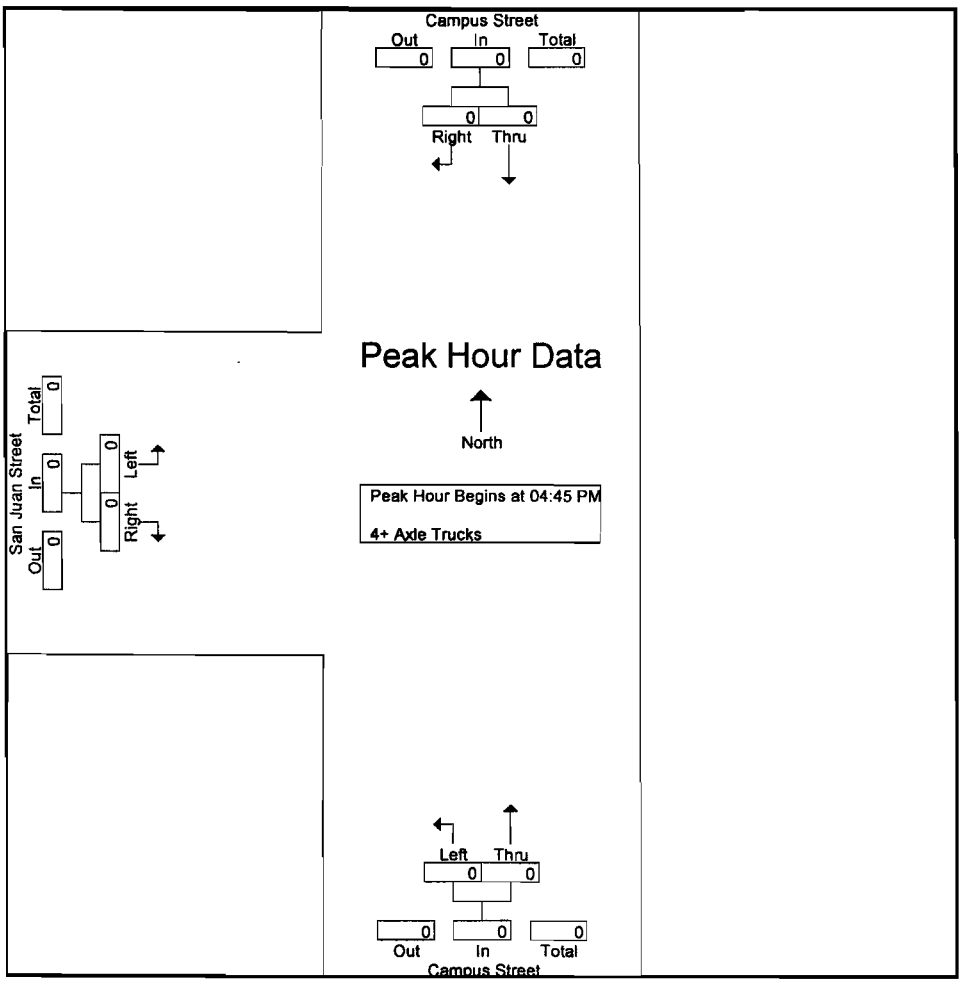

Peak Hour Analysis From 04:45 PM to 05:30 PM - Peak 1 of 1

Peak Hour for Each Approach Begins at:

	04:45 PM			04:45 PM			04:45 PM		
+0 mins.	0	0	0	0	0	0	0	0	0
+15 mins.	0	0	0	0	0	0	0	0	0
+30 mins.	0	0	0	0	0	0	0	0	0
+45 mins.	0	0	0	0	0	0	0	0	0
Total Volume	0	0	0	0	0	0	0	0	0
% App. Total	0	0		0	0		0	0	
PHF	.000	.000	.000	.000	.000	.000	.000	.000	.000

Counts Unlimited Inc.
PO Box 1178
Corona, CA 92878
(951) 268-6268

City of Loma Linda
N/S: Campus Street
E/W: Barton Road
Weather: Sunny

File Name : LMLCABAAM
Site Code : 00000097
Start Date : 10/11/2011
Page No : 1

Groups Printed- Passenger Vehicles - Large 2 Axle Vehicles - 3 Axle Vehicles - 4+ Axle Trucks

	Campus Street Southbound				Barton Road Westbound				Campus Street Northbound				Barton Road Eastbound				
Start Time	Left	Thru	Right	App. Total	Left	Thru	Right	App. Total	Left	Thru	Right	App. Total	Left	Thru	Right	App. Total	Int. Total
07:00 AM	23	4	13	40	3	77	51	131	7	13	5	25	44	152	3	199	395
07:15 AM	32	6	7	45	3	94	66	163	26	14	2	42	41	221	4	266	516
07:30 AM	33	2	29	64	3	119	116	238	24	42	1	67	53	237	4	294	663
07:45 AM	36	2	18	56	1	136	154	291	26	48	3	77	51	285	8	344	768
Total	124	14	67	205	10	426	387	823	83	117	11	211	189	895	19	1103	2342
08:00 AM	20	9	7	36	3	124	89	216	24	21	3	48	36	244	6	286	586
08:15 AM	32	2	3	37	0	99	60	159	18	14	1	33	29	180	4	213	442
08:30 AM	24	1	3	28	1	111	57	169	18	10	5	33	19	172	7	198	428
08:45 AM	36	4	6	46	4	130	43	177	8	13	7	28	24	200	4	228	479
Total	112	16	19	147	8	464	249	721	68	58	16	142	108	796	21	925	1935
Grand Total	236	30	86	352	18	890	636	1544	151	175	27	353	297	1691	40	2028	4277
Apprch %	67	8.5	24.4		1.2	57.6	41.2		42.8	49.6	7.6		14.6	83.4	2		
Total %	5.5	0.7	2	8.2	0.4	20.8	14.9	36.1	3.5	4.1	0.6	8.3	6.9	39.5	0.9	47.4	
Passenger Vehicles	217	30	85	332	17	870	623	1510	150	175	27	352	290	1665	40	1995	4189
% Passenger Vehicles	91.9	100	98.8	94.3	94.4	97.8	98	97.8	99.3	100	100	99.7	97.6	98.5	100	98.4	97.9
Large 2 Axle Vehicles	18	0	1	19	1	19	12	32	1	0	0	1	7	21	0	28	80
% Large 2 Axle Vehicles	7.6	0	1.2	5.4	5.6	2.1	1.9	2.1	0.7	0	0	0.3	2.4	1.2	0	1.4	1.9
3 Axle Vehicles	0	0	0	0	0	1	0	1	0	0	0	0	0	3	0	3	4
% 3 Axle Vehicles	0	0	0	0	0	0.1	0	0.1	0	0	0	0	0	0.2	0	0.1	0.1
4+ Axle Trucks	1	0	0	1	0	0	1	1	0	0	0	0	0	2	0	2	4
% 4+ Axle Trucks	0.4	0	0	0.3	0	0	0.2	0.1	0	0	0	0	0	0.1	0	0.1	0.1

	Campus Street Southbound				Barton Road Westbound				Campus Street Northbound				Barton Road Eastbound				
Start Time	Left	Thru	Right	App. Total	Left	Thru	Right	App. Total	Left	Thru	Right	App. Total	Left	Thru	Right	App. Total	Int. Total
Peak Hour Analysis From 07:00 AM to 08:45 AM - Peak 1 of 1																	
Peak Hour for Entire Intersection Begins at 07:15 AM																	
07:15 AM	32	6	7	45	**3**	94	66	163	**26**	14	2	42	41	221	4	266	516
07:30 AM	33	2	**29**	**64**	3	119	116	238	24	42	1	67	**53**	237	4	294	663
07:45 AM	**36**	2	18	56	1	**136**	**154**	**291**	26	**48**	**3**	**77**	51	**285**	**8**	**344**	**768**
08:00 AM	20	**9**	7	36	3	124	89	216	24	21	3	48	36	244	6	286	586
Total Volume	121	19	61	201	10	473	425	908	100	125	9	234	181	987	22	1190	2533
% App. Total	60.2	9.5	30.3		1.1	52.1	46.8		42.7	53.4	3.8		15.2	82.9	1.8		
PHF	.840	.528	.526	.785	.833	.869	.690	.780	.962	.651	.750	.760	.854	.866	.688	.865	.825

Counts Unlimited Inc.
PO Box 1178
Corona, CA 92878
(951) 268-6268

City of Loma Linda
N/S: Campus Street
E/W: Barton Road
Weather: Sunny

File Name : LMLCABAAM
Site Code : 00000097
Start Date : 10/11/2011
Page No : 2

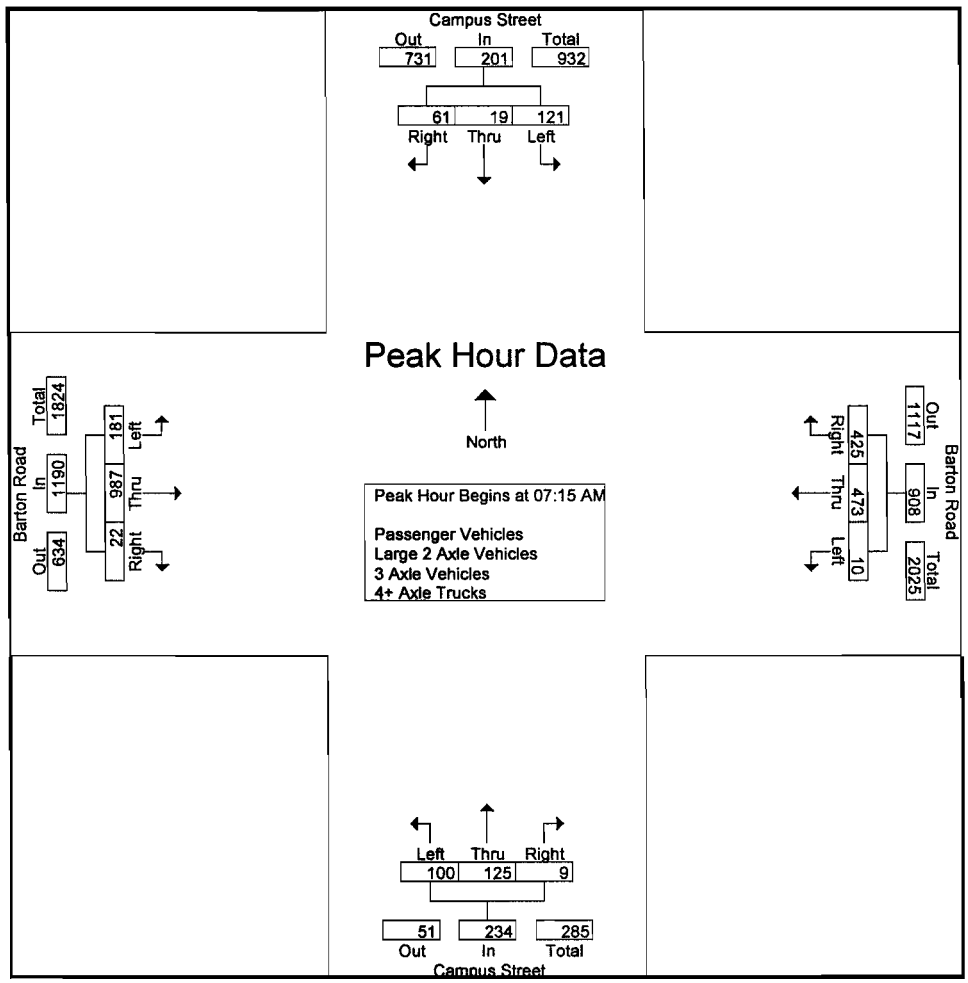

Peak Hour Analysis From 07:00 AM to 08:45 AM - Peak 1 of 1

Peak Hour for Each Approach Begins at:

	07:00 AM				07:15 AM				07:15 AM				07:15 AM			
+0 mins.	23	4	13	40	**3**	94	66	163	**26**	14	2	42	41	221	4	266
+15 mins.	32	**6**	7	45	3	119	116	238	24	42	1	67	**53**	237	4	294
+30 mins.	33	2	**29**	**64**	1	**136**	**154**	**291**	26	**48**	**3**	**77**	51	**285**	**8**	**344**
+45 mins.	**36**	2	18	56	3	124	89	216	24	21	3	48	36	244	6	286
Total Volume	124	14	67	205	10	473	425	908	100	125	9	234	181	987	22	1190
% App. Total	60.5	6.8	32.7		1.1	52.1	46.8		42.7	53.4	3.8		15.2	82.9	1.8	
PHF	.861	.583	.578	.801	.833	.869	.690	.780	.962	.651	.750	.760	.854	.866	.688	.865

Counts Unlimited Inc.
PO Box 1178
Corona, CA 92878
(951) 268-6268

City of Loma Linda
N/S: Campus Street
E/W: Barton Road
Weather: Sunny

File Name : LMLCABAAM
Site Code : 00000097
Start Date : 10/11/2011
Page No : 1

Groups Printed- Passenger Vehicles

	Campus Street Southbound				Barton Road Westbound				Campus Street Northbound				Barton Road Eastbound				
Start Time	Left	Thru	Right	App. Total	Left	Thru	Right	App. Total	Left	Thru	Right	App. Total	Left	Thru	Right	App. Total	Int. Total
07:00 AM	20	4	13	37	3	76	48	127	7	13	5	25	43	152	3	198	387
07:15 AM	32	6	7	45	3	92	64	159	25	14	2	41	40	215	4	259	504
07:30 AM	29	2	29	60	3	117	116	236	24	42	1	67	52	236	4	292	655
07:45 AM	35	2	17	54	1	132	152	285	26	48	3	77	51	281	8	340	756
Total	116	14	66	196	10	417	380	807	82	117	11	210	186	884	19	1089	2302
08:00 AM	18	9	7	34	2	122	88	212	24	21	3	48	35	238	6	279	573
08:15 AM	28	2	3	33	0	96	59	155	18	14	1	33	27	178	4	209	430
08:30 AM	21	1	3	25	1	109	53	163	18	10	5	33	18	167	7	192	413
08:45 AM	34	4	6	44	4	126	43	173	8	13	7	28	24	198	4	226	471
Total	101	16	19	136	7	453	243	703	68	58	16	142	104	781	21	906	1887
Grand Total	217	30	85	332	17	870	623	1510	150	175	27	352	290	1665	40	1995	4189
Apprch %	65.4	9	25.6		1.1	57.6	41.3		42.6	49.7	7.7		14.5	83.5	2		
Total %	5.2	0.7	2	7.9	0.4	20.8	14.9	36	3.6	4.2	0.6	8.4	6.9	39.7	1	47.6	

	Campus Street Southbound				Barton Road Westbound				Campus Street Northbound				Barton Road Eastbound				
Start Time	Left	Thru	Right	App. Total	Left	Thru	Right	App. Total	Left	Thru	Right	App. Total	Left	Thru	Right	App. Total	Int. Total
Peak Hour Analysis From 07:15 AM to 08:00 AM - Peak 1 of 1																	
Peak Hour for Entire Intersection Begins at 07:15 AM																	
07:15 AM	32	6	7	45	3	92	64	159	25	14	2	41	40	215	4	259	504
07:30 AM	29	2	29	60	3	117	116	236	24	42	1	67	52	236	4	292	655
07:45 AM	35	2	17	54	1	132	152	285	26	48	3	77	51	281	8	340	756
08:00 AM	18	9	7	34	2	122	88	212	24	21	3	48	35	238	6	279	573
Total Volume	114	19	60	193	9	463	420	892	99	125	9	233	178	970	22	1170	2488
% App. Total	59.1	9.8	31.1		1	51.9	47.1		42.5	53.6	3.9		15.2	82.9	1.9		
PHF	.814	.528	.517	.804	.750	.877	.691	.782	.952	.651	.750	.756	.856	.863	.688	.860	.823

Counts Unlimited Inc.
PO Box 1178
Corona, CA 92878
(951) 268-6268

City of Loma Linda
N/S: Campus Street
E/W: Barton Road
Weather: Sunny

File Name : LMLCABAAM
Site Code : 00000097
Start Date : 10/11/2011
Page No : 2

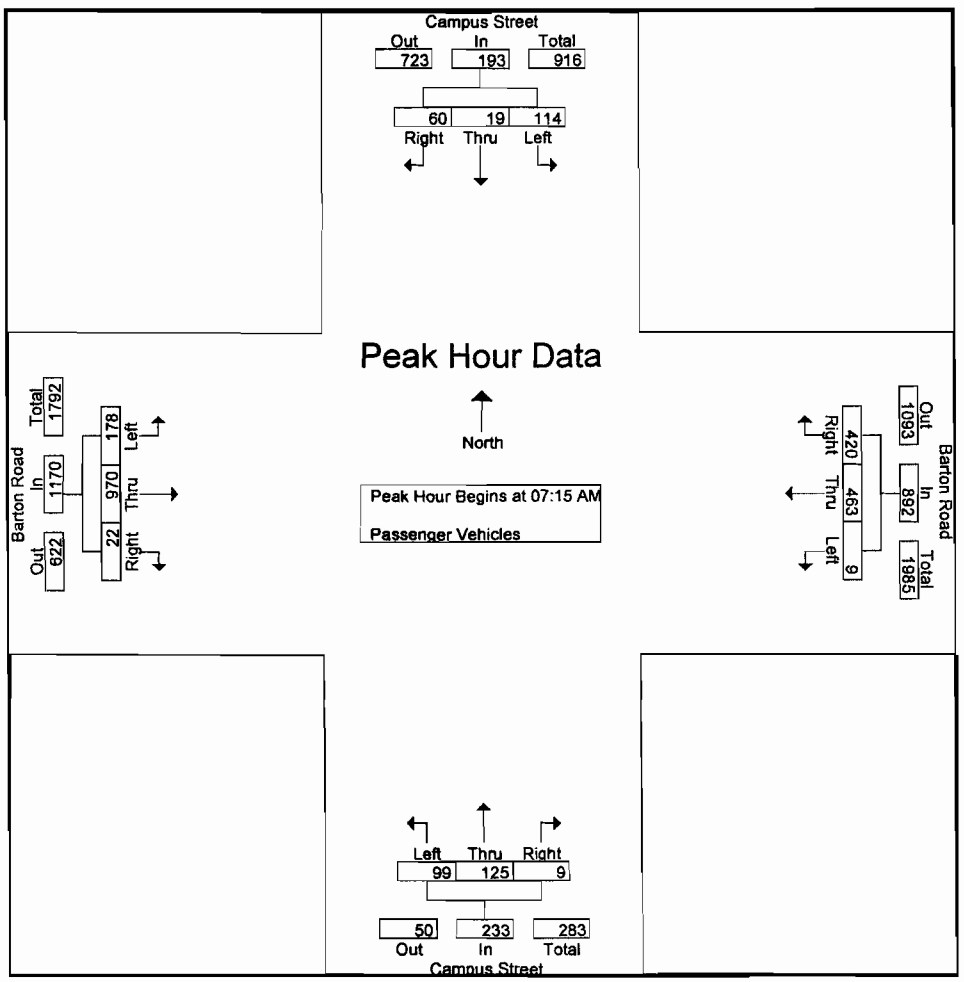

Peak Hour Analysis From 07:15 AM to 08:00 AM - Peak 1 of 1

Peak Hour for Each Approach Begins at:

	07:15 AM				07:15 AM				07:15 AM				07:15 AM			
+0 mins.	32	6	7	45	**3**	92	64	159	25	14	2	41	40	215	4	259
+15 mins.	29	2	**29**	**60**	3	117	116	236	24	42	1	67	**52**	236	4	292
+30 mins.	**35**	2	17	54	1	**132**	**152**	**285**	**26**	**48**	**3**	**77**	51	**281**	**8**	**340**
+45 mins.	18	**9**	7	34	2	122	88	212	24	21	3	48	35	238	6	279
Total Volume	114	19	60	193	9	463	420	892	99	125	9	233	178	970	22	1170
% App. Total	59.1	9.8	31.1		1	51.9	47.1		42.5	53.6	3.9		15.2	82.9	1.9	
PHF	.814	.528	.517	.804	.750	.877	.691	.782	.952	.651	.750	.756	.856	.863	.688	.860

Counts Unlimited Inc.
PO Box 1178
Corona, CA 92878
(951) 268-6268

City of Loma Linda
N/S: Campus Street
E/W: Barton Road
Weather: Sunny

File Name : LMLCABAAM
Site Code : 00000097
Start Date : 10/11/2011
Page No : 1

Groups Printed- Large 2 Axle Vehicles

	Campus Street Southbound				Barton Road Westbound				Campus Street Northbound				Barton Road Eastbound				
Start Time	Left	Thru	Right	App. Total	Left	Thru	Right	App. Total	Left	Thru	Right	App. Total	Left	Thru	Right	App. Total	Int. Total
07:00 AM	3	0	0	3	0	1	2	3	0	0	0	0	1	0	0	1	7
07:15 AM	0	0	0	0	0	2	2	4	1	0	0	1	1	5	0	6	11
07:30 AM	4	0	0	4	0	2	0	2	0	0	0	0	1	1	0	2	8
07:45 AM	1	0	1	2	0	3	2	5	0	0	0	0	0	3	0	3	10
Total	8	0	1	9	0	8	6	14	1	0	0	1	3	9	0	12	36
08:00 AM	1	0	0	1	1	2	1	4	0	0	0	0	1	4	0	5	10
08:15 AM	4	0	0	4	0	3	1	4	0	0	0	0	2	2	0	4	12
08:30 AM	3	0	0	3	0	2	4	6	0	0	0	0	1	4	0	5	14
08:45 AM	2	0	0	2	0	4	0	4	0	0	0	0	0	2	0	2	8
Total	10	0	0	10	1	11	6	18	0	0	0	0	4	12	0	16	44
Grand Total	18	0	1	19	1	19	12	32	1	0	0	1	7	21	0	28	80
Apprch %	94.7	0	5.3		3.1	59.4	37.5		100	0	0		25	75	0		
Total %	22.5	0	1.2	23.8	1.2	23.8	15	40	1.2	0	0	1.2	8.8	26.2	0	35	

	Campus Street Southbound				Barton Road Westbound				Campus Street Northbound				Barton Road Eastbound				
Start Time	Left	Thru	Right	App. Total	Left	Thru	Right	App. Total	Left	Thru	Right	App. Total	Left	Thru	Right	App. Total	Int. Total
Peak Hour Analysis From 07:15 AM to 08:00 AM - Peak 1 of 1																	
Peak Hour for Entire Intersection Begins at 07:15 AM																	
07:15 AM	0	0	0	0	0	2	2	4	1	0	0	1	1	5	0	6	11
07:30 AM	4	0	0	4	0	2	0	2	0	0	0	0	1	1	0	2	8
07:45 AM	1	0	1	2	0	3	2	5	0	0	0	0	0	3	0	3	10
08:00 AM	1	0	0	1	1	2	1	4	0	0	0	0	1	4	0	5	10
Total Volume	6	0	1	7	1	9	5	15	1	0	0	1	3	13	0	16	39
% App. Total	85.7	0	14.3		6.7	60	33.3		100	0	0		18.8	81.2	0		
PHF	.375	.000	.250	.438	.250	.750	.625	.750	.250	.000	.000	.250	.750	.650	.000	.667	.886

Counts Unlimited Inc.
PO Box 1178
Corona, CA 92878
(951) 268-6268

City of Loma Linda
N/S: Campus Street
E/W: Barton Road
Weather: Sunny

File Name : LMLCABAAM
Site Code : 00000097
Start Date : 10/11/2011
Page No : 2

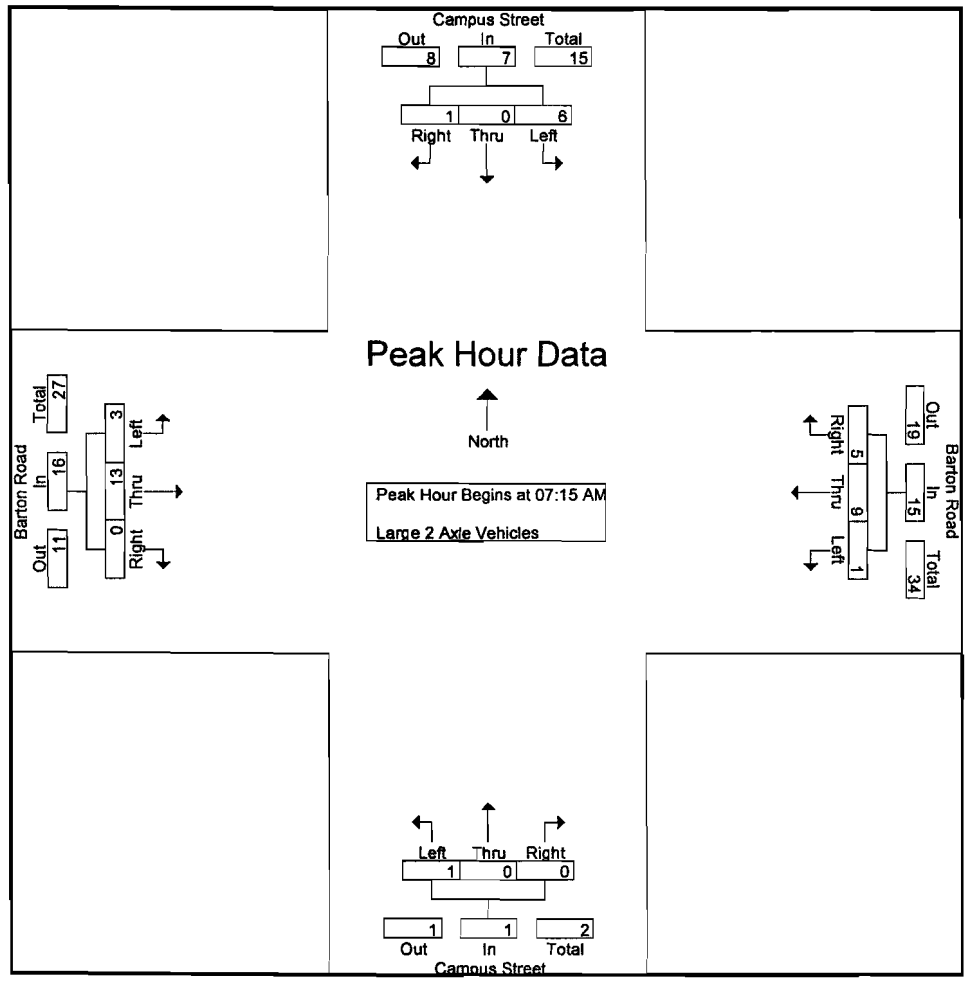

Peak Hour Analysis From 07:15 AM to 08:00 AM - Peak 1 of 1

Peak Hour for Each Approach Begins at:

	07:15 AM				07:15 AM				07:15 AM				07:15 AM			
+0 mins.	0	0	0	0	0	2	2	4	1	0	0	1	1	5	0	6
+15 mins.	4	0	0	4	0	2	0	2	0	0	0	0	1	1	0	2
+30 mins.	1	0	1	2	0	3	2	5	0	0	0	0	0	3	0	3
+45 mins.	1	0	0	1	1	2	1	4	0	0	0	0	1	4	0	5
Total Volume	6	0	1	7	1	9	5	15	1	0	0	1	3	13	0	16
% App. Total	85.7	0	14.3		6.7	60	33.3		100	0	0		18.8	81.2	0	
PHF	.375	.000	.250	.438	.250	.750	.625	.750	.250	.000	.000	.250	.750	.650	.000	.667

Counts Unlimited Inc.
PO Box 1178
Corona, CA 92878
(951) 268-6268

City of Loma Linda
N/S: Campus Street
E/W: Barton Road
Weather: Sunny

File Name : LMLCABAAM
Site Code : 00000097
Start Date : 10/11/2011
Page No : 1

Groups Printed- 3 Axle Vehicles

	Campus Street Southbound				Barton Road Westbound				Campus Street Northbound				Barton Road Eastbound				
Start Time	Left	Thru	Right	App. Total	Left	Thru	Right	App. Total	Left	Thru	Right	App. Total	Left	Thru	Right	App. Total	Int. Total
07:00 AM	0	0	0	0	0	0	0	0	0	0	0	0	0	0	0	0	0
07:15 AM	0	0	0	0	0	0	0	0	0	0	0	0	0	0	0	0	0
07:30 AM	0	0	0	0	0	0	0	0	0	0	0	0	0	0	0	0	0
07:45 AM	0	0	0	0	0	1	0	1	0	0	0	0	0	0	0	0	1
Total	0	0	0	0	0	1	0	1	0	0	0	0	0	0	0	0	1
08:00 AM	0	0	0	0	0	0	0	0	0	0	0	0	0	2	0	2	2
08:15 AM	0	0	0	0	0	0	0	0	0	0	0	0	0	0	0	0	0
08:30 AM	0	0	0	0	0	0	0	0	0	0	0	0	0	1	0	1	1
08:45 AM	0	0	0	0	0	0	0	0	0	0	0	0	0	0	0	0	0
Total	0	0	0	0	0	0	0	0	0	0	0	0	0	3	0	3	3
Grand Total	0	0	0	0	0	1	0	1	0	0	0	0	0	3	0	3	4
Apprch %	0	0	0		0	100	0		0	0	0		0	100	0		
Total %	0	0	0	0	0	25	0	25	0	0	0	0	0	75	0	75	

	Campus Street Southbound				Barton Road Westbound				Campus Street Northbound				Barton Road Eastbound				
Start Time	Left	Thru	Right	App. Total	Left	Thru	Right	App. Total	Left	Thru	Right	App. Total	Left	Thru	Right	App. Total	Int. Total
Peak Hour Analysis From 07:15 AM to 08:00 AM - Peak 1 of 1																	
Peak Hour for Entire Intersection Begins at 07:15 AM																	
07:15 AM	0	0	0	0	0	0	0	0	0	0	0	0	0	0	0	0	0
07:30 AM	0	0	0	0	0	0	0	0	0	0	0	0	0	0	0	0	0
07:45 AM	0	0	0	0	0	1	0	1	0	0	0	0	0	0	0	0	1
08:00 AM	0	0	0	0	0	0	0	0	0	0	0	0	0	2	0	2	2
Total Volume	0	0	0	0	0	1	0	1	0	0	0	0	0	2	0	2	3
% App. Total	0	0	0		0	100	0		0	0	0		0	100	0		
PHF	.000	.000	.000	.000	.000	.250	.000	.250	.000	.000	.000	.000	.000	.250	.000	.250	.375

Counts Unlimited Inc.
PO Box 1178
Corona, CA 92878
(951) 268-6268

City of Loma Linda
N/S: Campus Street
E/W: Barton Road
Weather: Sunny

File Name : LMLCABAAM
Site Code : 00000097
Start Date : 10/11/2011
Page No : 2

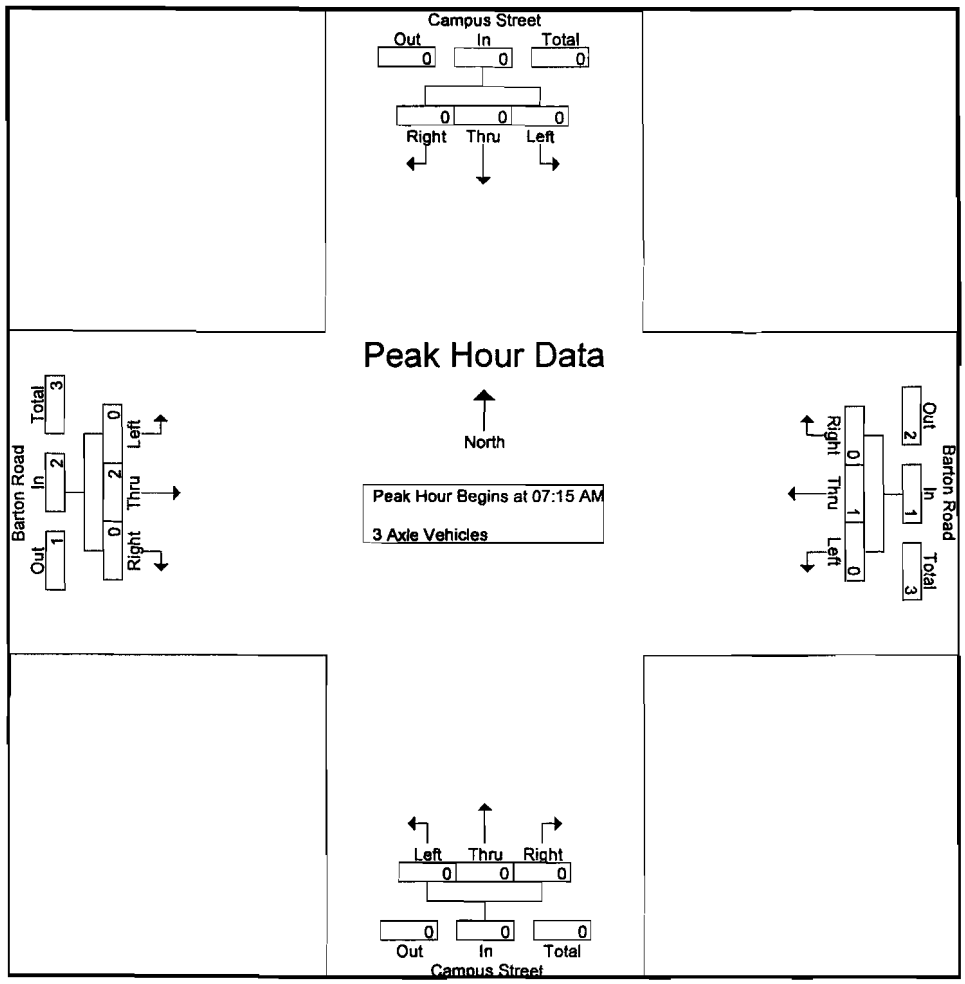

Peak Hour Analysis From 07:15 AM to 08:00 AM - Peak 1 of 1

Peak Hour for Each Approach Begins at:

	07:15 AM				07:15 AM				07:15 AM				07:15 AM			
+0 mins.	0	0	0	0	0	0	0	0	0	0	0	0	0	0	0	0
+15 mins.	0	0	0	0	0	0	0	0	0	0	0	0	0	0	0	0
+30 mins.	0	0	0	0	0	1	0	1	0	0	0	0	0	0	0	0
+45 mins.	0	0	0	0	0	0	0	0	0	0	0	0	0	2	0	2
Total Volume	0	0	0	0	0	1	0	1	0	0	0	0	0	2	0	2
% App. Total	0	0	0		0	100	0		0	0	0		0	100	0	
PHF	.000	.000	.000	.000	.000	.250	.000	.250	.000	.000	.000	.000	.000	.250	.000	.250

Counts Unlimited Inc.
PO Box 1178
Corona, CA 92878
(951) 268-6268

City of Loma Linda
N/S: Campus Street
E/W: Barton Road
Weather: Sunny

File Name : LMLCABAAM
Site Code : 00000097
Start Date : 10/11/2011
Page No : 1

Groups Printed- 4+ Axle Trucks

	Campus Street Southbound				Barton Road Westbound				Campus Street Northbound				Barton Road Eastbound				
Start Time	Left	Thru	Right	App. Total	Left	Thru	Right	App. Total	Left	Thru	Right	App. Total	Left	Thru	Right	App. Total	Int. Total
07:00 AM	0	0	0	0	0	0	1	1	0	0	0	0	0	0	0	0	1
07:15 AM	0	0	0	0	0	0	0	0	0	0	0	0	0	1	0	1	1
07:30 AM	0	0	0	0	0	0	0	0	0	0	0	0	0	0	0	0	0
07:45 AM	0	0	0	0	0	0	0	0	0	0	0	0	0	1	0	1	1
Total	0	0	0	0	0	0	1	1	0	0	0	0	0	2	0	2	3
08:00 AM	1	0	0	1	0	0	0	0	0	0	0	0	0	0	0	0	1
08:15 AM	0	0	0	0	0	0	0	0	0	0	0	0	0	0	0	0	0
08:30 AM	0	0	0	0	0	0	0	0	0	0	0	0	0	0	0	0	0
08:45 AM	0	0	0	0	0	0	0	0	0	0	0	0	0	0	0	0	0
Total	1	0	0	1	0	0	0	0	0	0	0	0	0	0	0	0	1
Grand Total	1	0	0	1	0	0	1	1	0	0	0	0	0	2	0	2	4
Apprch %	100	0	0		0	0	100		0	0	0		0	100	0		
Total %	25	0	0	25	0	0	25	25	0	0	0	0	0	50	0	50	

	Campus Street Southbound				Barton Road Westbound				Campus Street Northbound				Barton Road Eastbound				
Start Time	Left	Thru	Right	App. Total	Left	Thru	Right	App. Total	Left	Thru	Right	App. Total	Left	Thru	Right	App. Total	Int. Total
Peak Hour Analysis From 07:15 AM to 08:00 AM - Peak 1 of 1																	
Peak Hour for Entire Intersection Begins at 07:15 AM																	
07:15 AM	0	0	0	0	0	0	0	0	0	0	0	0	0	1	0	1	1
07:30 AM	0	0	0	0	0	0	0	0	0	0	0	0	0	0	0	0	0
07:45 AM	0	0	0	0	0	0	0	0	0	0	0	0	0	1	0	1	1
08:00 AM	1	0	0	1	0	0	0	0	0	0	0	0	0	0	0	0	1
Total Volume	1	0	0	1	0	0	0	0	0	0	0	0	0	2	0	2	3
% App. Total	100	0	0		0	0	0		0	0	0		0	100	0		
PHF	.250	.000	.000	.250	.000	.000	.000	.000	.000	.000	.000	.000	.000	.500	.000	.500	.750

Counts Unlimited Inc.
PO Box 1178
Corona, CA 92878
(951) 268-6268

City of Loma Linda
N/S: Campus Street
E/W: Barton Road
Weather: Sunny

File Name : LMLCABAAM
Site Code : 00000097
Start Date : 10/11/2011
Page No : 2

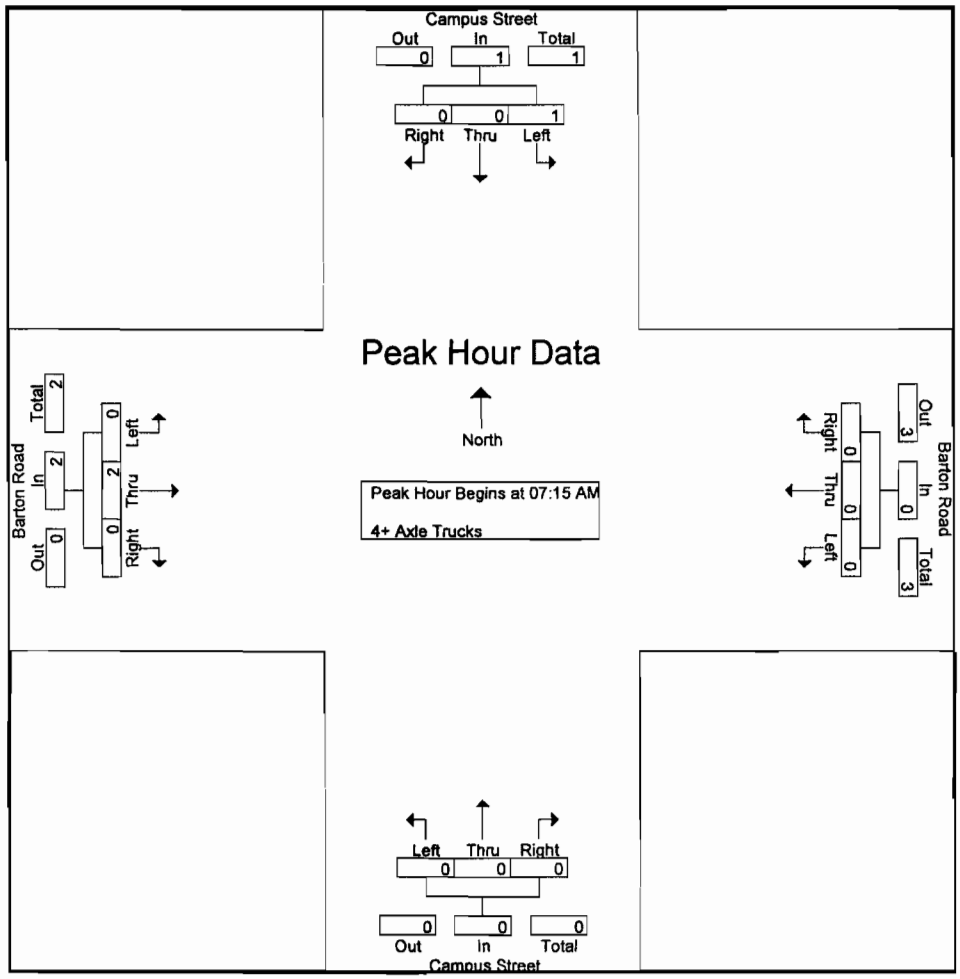

Peak Hour Analysis From 07:15 AM to 08:00 AM - Peak 1 of 1

Peak Hour for Each Approach Begins at:

	07:15 AM				07:15 AM				07:15 AM				07:15 AM			
+0 mins.	0	0	0	0	0	0	0	0	0	0	0	0	0	1	0	1
+15 mins.	0	0	0	0	0	0	0	0	0	0	0	0	0	0	0	0
+30 mins.	0	0	0	0	0	0	0	0	0	0	0	0	0	1	0	1
+45 mins.	1	0	0	1	0	0	0	0	0	0	0	0	0	0	0	0
Total Volume	1	0	0	1	0	0	0	0	0	0	0	0	0	2	0	2
% App. Total	100	0	0		0	0	0		0	0	0		0	100	0	
PHF	.250	.000	.000	.250	.000	.000	.000	.000	.000	.000	.000	.000	.000	.500	.000	.500

Counts Unlimited Inc.
PO Box 1178
Corona, CA 92878
(951) 268-6268

City of Loma Linda
N/S: Campus Street
E/W: Barton Road
Weather: Sunny

File Name : LMLCABAPM
Site Code : 00000097
Start Date : 10/11/2011
Page No : 1

Groups Printed- Passenger Vehicles - Large 2 Axle Vehicles - 3 Axle Vehicles - 4+ Axle Trucks

	Campus Street Southbound				Barton Road Westbound				Campus Street Northbound				Barton Road Eastbound				
Start Time	Left	Thru	Right	App. Total	Left	Thru	Right	App. Total	Left	Thru	Right	App. Total	Left	Thru	Right	App. Total	Int. Total
04:00 PM	57	8	30	95	3	242	39	284	7	3	1	11	10	147	6	163	553
04:15 PM	50	6	27	83	3	230	30	263	13	3	1	17	10	166	7	183	546
04:30 PM	77	17	22	116	4	265	28	297	10	1	3	14	12	132	6	150	577
04:45 PM	76	14	25	115	10	238	40	288	7	10	0	17	10	140	9	159	579
Total	260	45	104	409	20	975	137	1132	37	17	5	59	42	585	28	655	2255
05:00 PM	99	14	37	150	6	272	32	310	21	5	7	33	18	162	13	193	686
05:15 PM	100	21	34	155	3	285	42	330	21	6	1	28	13	158	15	186	699
05:30 PM	76	17	24	117	2	204	27	233	16	11	6	33	13	166	10	189	572
05:45 PM	73	18	4	95	3	200	37	240	17	9	6	32	19	178	8	205	572
Total	348	70	99	517	14	961	138	1113	75	31	20	126	63	664	46	773	2529
Grand Total	608	115	203	926	34	1936	275	2245	112	48	25	185	105	1249	74	1428	4784
Apprch %	65.7	12.4	21.9		1.5	86.2	12.2		60.5	25.9	13.5		7.4	87.5	5.2		
Total %	12.7	2.4	4.2	19.4	0.7	40.5	5.7	46.9	2.3	1	0.5	3.9	2.2	26.1	1.5	29.8	
Passenger Vehicles	598	115	202	915	33	1922	268	2223	111	48	25	184	98	1241	74	1413	4735
% Passenger Vehicles	98.4	100	99.5	98.8	97.1	99.3	97.5	99	99.1	100	100	99.5	93.3	99.4	100	98.9	99
Large 2 Axle Vehicles	10	0	1	11	1	12	7	20	1	0	0	1	7	8	0	15	47
% Large 2 Axle Vehicles	1.6	0	0.5	1.2	2.9	0.6	2.5	0.9	0.9	0	0	0.5	6.7	0.6	0	1.1	1
3 Axle Vehicles	0	0	0	0	0	2	0	2	0	0	0	0	0	0	0	0	2
% 3 Axle Vehicles	0	0	0	0	0	0.1	0	0.1	0	0	0	0	0	0	0	0	0
4+ Axle Trucks	0	0	0	0	0	0	0	0	0	0	0	0	0	0	0	0	0
% 4+ Axle Trucks	0	0	0	0	0	0	0	0	0	0	0	0	0	0	0	0	0

	Campus Street Southbound				Barton Road Westbound				Campus Street Northbound				Barton Road Eastbound				
Start Time	Left	Thru	Right	App. Total	Left	Thru	Right	App. Total	Left	Thru	Right	App. Total	Left	Thru	Right	App. Total	Int. Total
Peak Hour Analysis From 04:00 PM to 05:45 PM - Peak 1 of 1																	
Peak Hour for Entire Intersection Begins at 04:30 PM																	
04:30 PM	77	17	22	116	4	265	28	297	10	1	3	14	12	132	6	150	577
04:45 PM	76	14	25	115	**10**	238	40	288	7	**10**	0	17	10	140	9	159	579
05:00 PM	99	14	**37**	150	6	272	32	310	**21**	5	**7**	**33**	**18**	**162**	13	**193**	686
05:15 PM	**100**	**21**	34	**155**	3	**285**	**42**	**330**	21	6	1	28	13	158	**15**	186	**699**
Total Volume	352	66	118	536	23	1060	142	1225	59	22	11	92	53	592	43	688	2541
% App. Total	65.7	12.3	22		1.9	86.5	11.6		64.1	23.9	12		7.7	86	6.2		
PHF	.880	.786	.797	.865	.575	.930	.845	.928	.702	.550	.393	.697	.736	.914	.717	.891	.909

Counts Unlimited Inc.
PO Box 1178
Corona, CA 92878
(951) 268-6268

City of Loma Linda
N/S: Campus Street
E/W: Barton Road
Weather: Sunny

File Name : LMLCABAPM
Site Code : 00000097
Start Date : 10/11/2011
Page No : 2

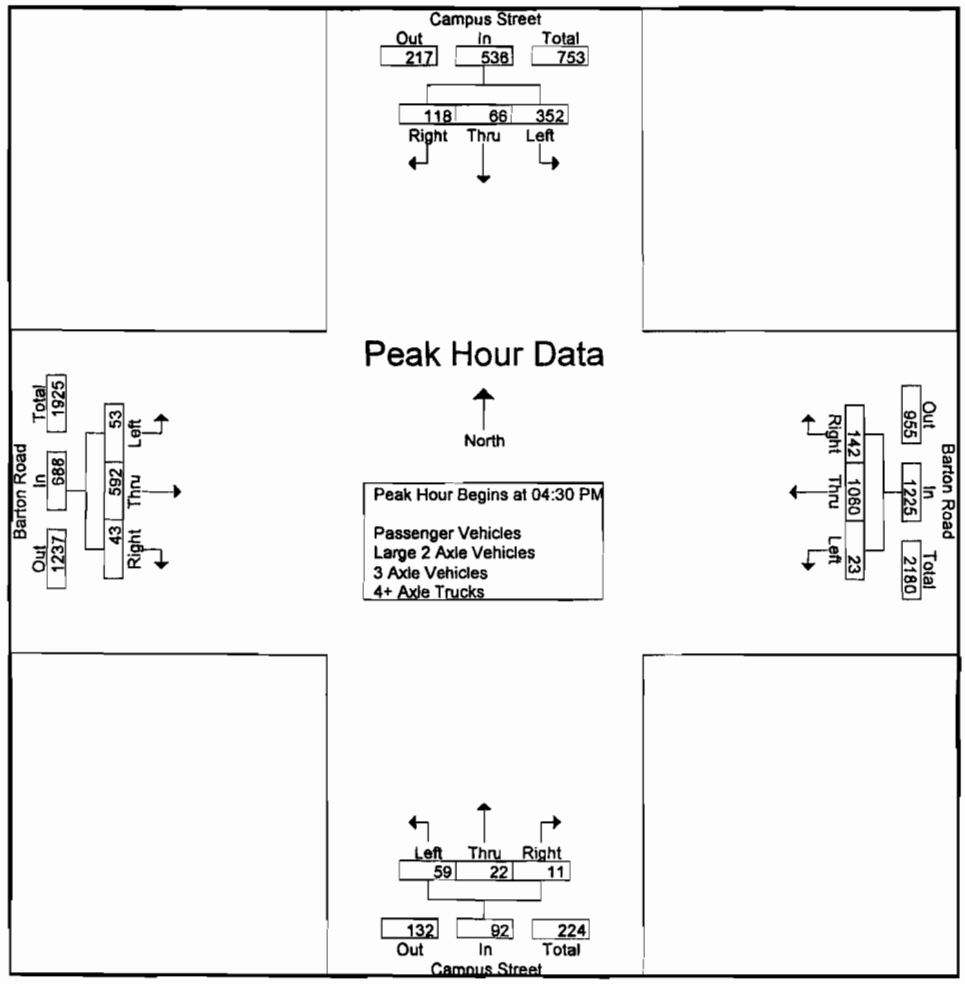

Peak Hour Analysis From 04:00 PM to 05:45 PM - Peak 1 of 1

Peak Hour for Each Approach Begins at:

	04:45 PM				04:30 PM				05:00 PM				05:00 PM			
+0 mins.	76	14	25	115	4	265	28	297	**21**	5	**7**	**33**	18	162	13	193
+15 mins.	99	14	**37**	150	**10**	238	40	288	21	6	1	28	13	158	**15**	186
+30 mins.	**100**	**21**	34	**155**	6	272	32	310	16	**11**	6	33	13	166	10	189
+45 mins.	76	17	24	117	3	**285**	**42**	**330**	17	9	6	32	**19**	**178**	8	**205**
Total Volume	351	66	120	537	23	1060	142	1225	75	31	20	126	63	664	46	773
% App. Total	65.4	12.3	22.3		1.9	86.5	11.6		59.5	24.6	15.9		8.2	85.9	6	
PHF	.878	.786	.811	.866	.575	.930	.845	.928	.893	.705	.714	.955	.829	.933	.767	.943

Counts Unlimited Inc.
PO Box 1178
Corona, CA 92878
(951) 268-6268

City of Loma Linda
N/S: Campus Street
E/W: Barton Road
Weather: Sunny

File Name : LMLCABAPM
Site Code : 00000097
Start Date : 10/11/2011
Page No : 1

Groups Printed- Passenger Vehicles

	Campus Street Southbound				Barton Road Westbound				Campus Street Northbound				Barton Road Eastbound				
Start Time	Left	Thru	Right	App. Total	Left	Thru	Right	App. Total	Left	Thru	Right	App. Total	Left	Thru	Right	App. Total	Int. Total
04:00 PM	55	8	30	93	2	241	38	281	7	3	1	11	9	147	6	162	547
04:15 PM	50	6	27	83	3	230	29	262	13	3	1	17	9	166	7	182	544
04:30 PM	75	17	22	114	4	263	27	294	10	1	3	14	10	131	6	147	569
04:45 PM	74	14	25	113	10	234	39	283	7	10	0	17	9	138	9	156	569
Total	254	45	104	403	19	968	133	1120	37	17	5	59	37	582	28	647	2229
05:00 PM	98	14	37	149	6	272	32	310	21	5	7	33	18	161	13	192	684
05:15 PM	99	21	34	154	3	284	40	327	21	6	1	28	12	155	15	182	691
05:30 PM	76	17	23	116	2	204	27	233	16	11	6	33	12	166	10	188	570
05:45 PM	71	18	4	93	3	194	36	233	16	9	6	31	19	177	8	204	561
Total	344	70	98	512	14	954	135	1103	74	31	20	125	61	659	46	766	2506
Grand Total	598	115	202	915	33	1922	268	2223	111	48	25	184	98	1241	74	1413	4735
Apprch %	65.4	12.6	22.1		1.5	86.5	12.1		60.3	26.1	13.6		6.9	87.8	5.2		
Total %	12.6	2.4	4.3	19.3	0.7	40.6	5.7	46.9	2.3	1	0.5	3.9	2.1	26.2	1.6	29.8	

	Campus Street Southbound				Barton Road Westbound				Campus Street Northbound				Barton Road Eastbound				
Start Time	Left	Thru	Right	App. Total	Left	Thru	Right	App. Total	Left	Thru	Right	App. Total	Left	Thru	Right	App. Total	Int. Total
Peak Hour Analysis From 04:30 PM to 05:15 PM - Peak 1 of 1																	
Peak Hour for Entire Intersection Begins at 04:30 PM																	
04:30 PM	75	17	22	114	4	263	27	294	10	1	3	14	10	131	6	147	569
04:45 PM	74	14	25	113	**10**	234	39	283	7	**10**	0	17	9	138	9	156	569
05:00 PM	98	14	**37**	149	6	272	32	310	**21**	5	**7**	**33**	**18**	**161**	13	**192**	684
05:15 PM	**99**	**21**	34	**154**	3	**284**	**40**	**327**	21	6	1	28	12	155	**15**	182	**691**
Total Volume	346	66	118	530	23	1053	138	1214	59	22	11	92	49	585	43	677	2513
% App. Total	65.3	12.5	22.3		1.9	86.7	11.4		64.1	23.9	12		7.2	86.4	6.4		
PHF	.874	.786	.797	.860	.575	.927	.863	.928	.702	.550	.393	.697	.681	.908	.717	.882	.909

Counts Unlimited Inc.
PO Box 1178
Corona, CA 92878
(951) 268-6268

City of Loma Linda
N/S: Campus Street
E/W: Barton Road
Weather: Sunny

File Name : LMLCABAPM
Site Code : 00000097
Start Date : 10/11/2011
Page No : 2

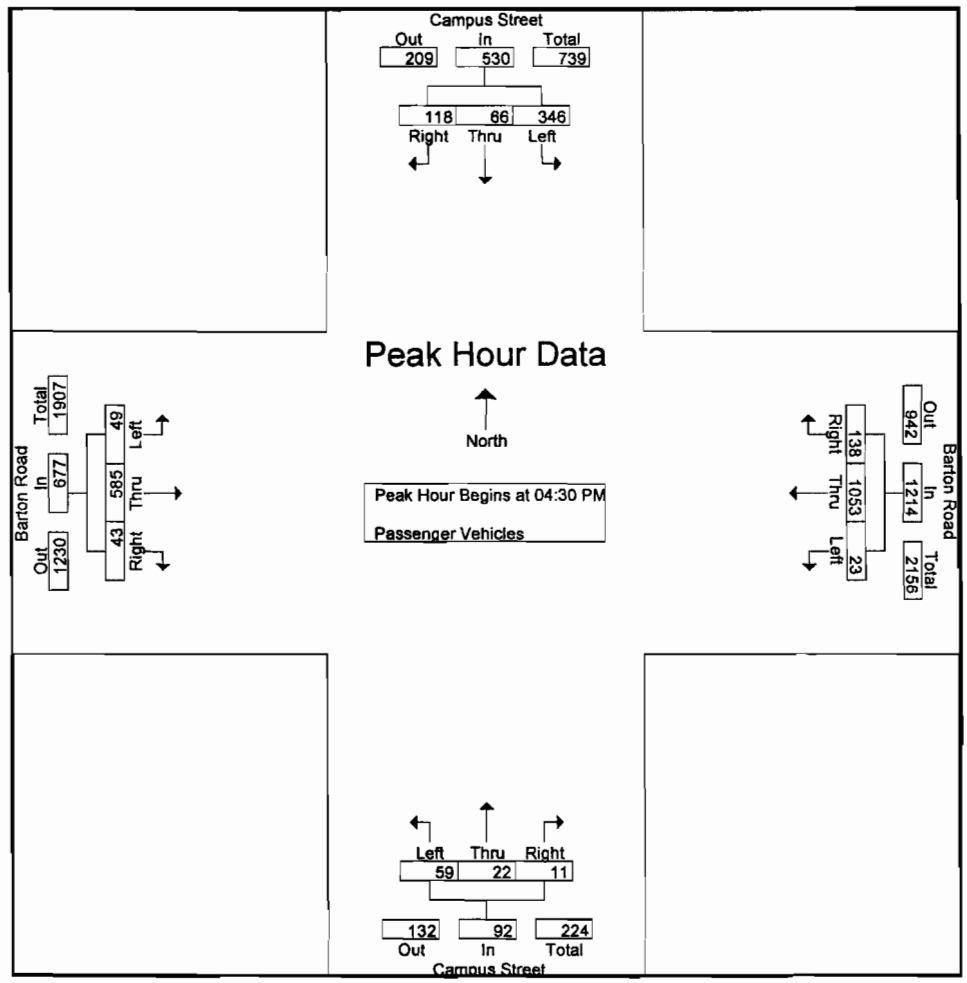

Peak Hour Analysis From 04:30 PM to 05:15 PM - Peak 1 of 1

Peak Hour for Each Approach Begins at:

	04:30 PM				04:30 PM				04:30 PM				04:30 PM			
+0 mins.	75	17	22	114	4	263	27	294	10	1	3	14	10	131	6	147
+15 mins.	74	14	25	113	**10**	234	39	283	7	**10**	0	17	9	138	9	156
+30 mins.	98	14	**37**	149	6	272	32	310	**21**	5	**7**	**33**	**18**	**161**	13	**192**
+45 mins.	**99**	**21**	34	**154**	3	**284**	**40**	**327**	21	6	1	28	12	155	**15**	182
Total Volume	346	66	118	530	23	1053	138	1214	59	22	11	92	49	585	43	677
% App. Total	65.3	12.5	22.3		1.9	86.7	11.4		64.1	23.9	12		7.2	86.4	6.4	
PHF	.874	.786	.797	.860	.575	.927	.863	.928	.702	.550	.393	.697	.681	.908	.717	.882

Counts Unlimited Inc.
PO Box 1178
Corona, CA 92878
(951) 268-6268

City of Loma Linda
N/S: Campus Street
E/W: Barton Road
Weather: Sunny

File Name : LMLCABAPM
Site Code : 00000097
Start Date : 10/11/2011
Page No : 1

Groups Printed- Large 2 Axle Vehicles

	Campus Street Southbound				Barton Road Westbound				Campus Street Northbound				Barton Road Eastbound				
Start Time	Left	Thru	Right	App. Total	Left	Thru	Right	App. Total	Left	Thru	Right	App. Total	Left	Thru	Right	App. Total	Int. Total
04:00 PM	2	0	0	2	1	1	1	3	0	0	0	0	1	0	0	1	6
04:15 PM	0	0	0	0	0	0	1	1	0	0	0	0	1	0	0	1	2
04:30 PM	2	0	0	2	0	2	1	3	0	0	0	0	2	1	0	3	8
04:45 PM	2	0	0	2	0	4	1	5	0	0	0	0	1	2	0	3	10
Total	6	0	0	6	1	7	4	12	0	0	0	0	5	3	0	8	26
05:00 PM	1	0	0	1	0	0	0	0	0	0	0	0	0	1	0	1	2
05:15 PM	1	0	0	1	0	1	2	3	0	0	0	0	1	3	0	4	8
05:30 PM	0	0	1	1	0	0	0	0	0	0	0	0	1	0	0	1	2
05:45 PM	2	0	0	2	0	4	1	5	1	0	0	1	0	1	0	1	9
Total	4	0	1	5	0	5	3	8	1	0	0	1	2	5	0	7	21
Grand Total	10	0	1	11	1	12	7	20	1	0	0	1	7	8	0	15	47
Apprch %	90.9	0	9.1		5	60	35		100	0	0		46.7	53.3	0		
Total %	21.3	0	2.1	23.4	2.1	25.5	14.9	42.6	2.1	0	0	2.1	14.9	17	0	31.9	

	Campus Street Southbound				Barton Road Westbound				Campus Street Northbound				Barton Road Eastbound				
Start Time	Left	Thru	Right	App. Total	Left	Thru	Right	App. Total	Left	Thru	Right	App. Total	Left	Thru	Right	App. Total	Int. Total
Peak Hour Analysis From 04:30 PM to 05:15 PM - Peak 1 of 1																	
Peak Hour for Entire Intersection Begins at 04:30 PM																	
04:30 PM	2	0	0	2	0	2	1	3	0	0	0	0	2	1	0	3	8
04:45 PM	2	0	0	2	0	4	1	5	0	0	0	0	1	2	0	3	10
05:00 PM	1	0	0	1	0	0	0	0	0	0	0	0	0	1	0	1	2
05:15 PM	1	0	0	1	0	1	2	3	0	0	0	0	1	3	0	4	8
Total Volume	6	0	0	6	0	7	4	11	0	0	0	0	4	7	0	11	28
% App. Total	100	0	0		0	63.6	36.4		0	0	0		36.4	63.6	0		
PHF	.750	.000	.000	.750	.000	.438	.500	.550	.000	.000	.000	.000	.500	.583	.000	.688	.700

Counts Unlimited Inc.
PO Box 1178
Corona, CA 92878
(951) 268-6268

City of Loma Linda
N/S: Campus Street
E/W: Barton Road
Weather: Sunny

File Name : LMLCABAPM
Site Code : 00000097
Start Date : 10/11/2011
Page No : 2

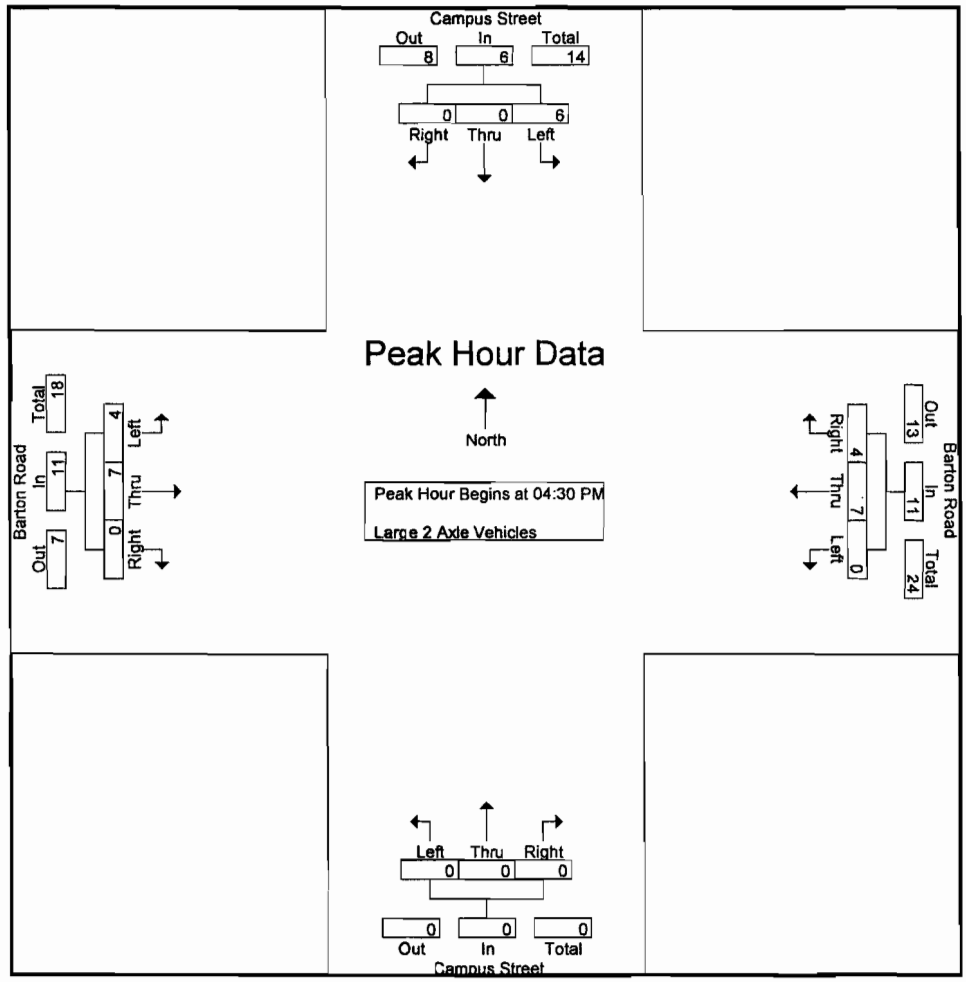

Peak Hour Analysis From 04:30 PM to 05:15 PM - Peak 1 of 1

Peak Hour for Each Approach Begins at:

	04:30 PM				04:30 PM				04:30 PM				04:30 PM			
+0 mins.	2	0	0	2	0	2	1	3	0	0	0	0	2	1	0	3
+15 mins.	2	0	0	2	0	4	1	5	0	0	0	0	1	2	0	3
+30 mins.	1	0	0	1	0	0	0	0	0	0	0	0	0	1	0	1
+45 mins.	1	0	0	1	0	1	2	3	0	0	0	0	1	3	0	4
Total Volume	6	0	0	6	0	7	4	11	0	0	0	0	4	7	0	11
% App. Total	100	0	0		0	63.6	36.4		0	0	0		36.4	63.6	0	
PHF	.750	.000	.000	.750	.000	.438	.500	.550	.000	.000	.000	.000	.500	.583	.000	.688

Counts Unlimited Inc.
PO Box 1178
Corona, CA 92878
(951) 268-6268

City of Loma Linda
N/S: Campus Street
E/W: Barton Road
Weather: Sunny

File Name : LMLCABAPM
Site Code : 00000097
Start Date : 10/11/2011
Page No : 1

Groups Printed- 3 Axle Vehicles

	Campus Street Southbound				Barton Road Westbound				Campus Street Northbound				Barton Road Eastbound				
Start Time	Left	Thru	Right	App. Total	Left	Thru	Right	App. Total	Left	Thru	Right	App. Total	Left	Thru	Right	App. Total	Int. Total
04:00 PM	0	0	0	0	0	0	0	0	0	0	0	0	0	0	0	0	0
04:15 PM	0	0	0	0	0	0	0	0	0	0	0	0	0	0	0	0	0
04:30 PM	0	0	0	0	0	0	0	0	0	0	0	0	0	0	0	0	0
04:45 PM	0	0	0	0	0	0	0	0	0	0	0	0	0	0	0	0	0
Total	0	0	0	0	0	0	0	0	0	0	0	0	0	0	0	0	0
05:00 PM	0	0	0	0	0	0	0	0	0	0	0	0	0	0	0	0	0
05:15 PM	0	0	0	0	0	0	0	0	0	0	0	0	0	0	0	0	0
05:30 PM	0	0	0	0	0	0	0	0	0	0	0	0	0	0	0	0	0
05:45 PM	0	0	0	0	0	2	0	2	0	0	0	0	0	0	0	0	2
Total	0	0	0	0	0	2	0	2	0	0	0	0	0	0	0	0	2
Grand Total	0	0	0	0	0	2	0	2	0	0	0	0	0	0	0	0	2
Apprch %	0	0	0		0	100	0		0	0	0		0	0	0		
Total %	0	0	0	0	0	100	0	100	0	0	0	0	0	0	0	0	

	Campus Street Southbound				Barton Road Westbound				Campus Street Northbound				Barton Road Eastbound				
Start Time	Left	Thru	Right	App. Total	Left	Thru	Right	App. Total	Left	Thru	Right	App. Total	Left	Thru	Right	App. Total	Int. Total
Peak Hour Analysis From 04:30 PM to 05:15 PM - Peak 1 of 1																	
Peak Hour for Entire Intersection Begins at 04:30 PM																	
04:30 PM	0	0	0	0	0	0	0	0	0	0	0	0	0	0	0	0	0
04:45 PM	0	0	0	0	0	0	0	0	0	0	0	0	0	0	0	0	0
05:00 PM	0	0	0	0	0	0	0	0	0	0	0	0	0	0	0	0	0
05:15 PM	0	0	0	0	0	0	0	0	0	0	0	0	0	0	0	0	0
Total Volume	0	0	0	0	0	0	0	0	0	0	0	0	0	0	0	0	0
% App. Total	0	0	0		0	0	0		0	0	0		0	0	0		
PHF	.000	.000	.000	.000	.000	.000	.000	.000	.000	.000	.000	.000	.000	.000	.000	.000	.000

Counts Unlimited Inc.
PO Box 1178
Corona, CA 92878
(951) 268-6268

City of Loma Linda
N/S: Campus Street
E/W: Barton Road
Weather: Sunny

File Name : LMLCABAPM
Site Code : 00000097
Start Date : 10/11/2011
Page No : 2

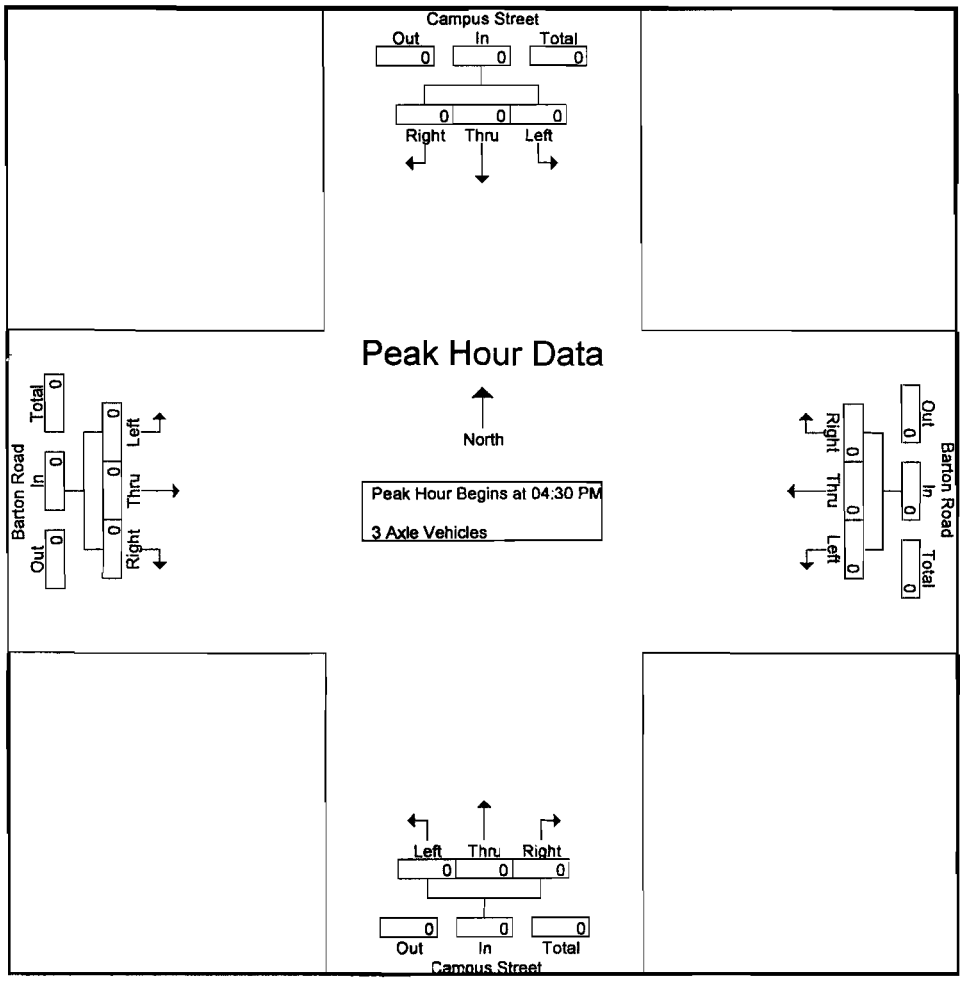

Peak Hour Analysis From 04:30 PM to 05:15 PM - Peak 1 of 1

Peak Hour for Each Approach Begins at:

	04:30 PM				04:30 PM				04:30 PM				04:30 PM			
+0 mins.	0	0	0	0	0	0	0	0	0	0	0	0	0	0	0	0
+15 mins.	0	0	0	0	0	0	0	0	0	0	0	0	0	0	0	0
+30 mins.	0	0	0	0	0	0	0	0	0	0	0	0	0	0	0	0
+45 mins.	0	0	0	0	0	0	0	0	0	0	0	0	0	0	0	0
Total Volume	0	0	0	0	0	0	0	0	0	0	0	0	0	0	0	0
% App. Total	0	0	0		0	0	0		0	0	0		0	0	0	
PHF	.000	.000	.000	.000	.000	.000	.000	.000	.000	.000	.000	.000	.000	.000	.000	.000

Counts Unlimited Inc.
PO Box 1178
Corona, CA 92878
(951) 268-6268

City of Loma Linda
N/S: Campus Street
E/W: Barton Road
Weather: Sunny

File Name : LMLCABAPM
Site Code : 00000097
Start Date : 10/11/2011
Page No : 1

Groups Printed- 4+ Axle Trucks

	Campus Street Southbound				Barton Road Westbound				Campus Street Northbound				Barton Road Eastbound				
Start Time	Left	Thru	Right	App. Total	Left	Thru	Right	App. Total	Left	Thru	Right	App. Total	Left	Thru	Right	App. Total	Int. Total
04:00 PM	0	0	0	0	0	0	0	0	0	0	0	0	0	0	0	0	0
04:15 PM	0	0	0	0	0	0	0	0	0	0	0	0	0	0	0	0	0
04:30 PM	0	0	0	0	0	0	0	0	0	0	0	0	0	0	0	0	0
04:45 PM	0	0	0	0	0	0	0	0	0	0	0	0	0	0	0	0	0
Total	0	0	0	0	0	0	0	0	0	0	0	0	0	0	0	0	0
05:00 PM	0	0	0	0	0	0	0	0	0	0	0	0	0	0	0	0	0
05:15 PM	0	0	0	0	0	0	0	0	0	0	0	0	0	0	0	0	0
05:30 PM	0	0	0	0	0	0	0	0	0	0	0	0	0	0	0	0	0
05:45 PM	0	0	0	0	0	0	0	0	0	0	0	0	0	0	0	0	0
Total	0	0	0	0	0	0	0	0	0	0	0	0	0	0	0	0	0
Grand Total	0	0	0	0	0	0	0	0	0	0	0	0	0	0	0	0	0
Apprch %	0	0	0		0	0	0		0	0	0		0	0	0		
Total %																	

	Campus Street Southbound				Barton Road Westbound				Campus Street Northbound				Barton Road Eastbound				
Start Time	Left	Thru	Right	App. Total	Left	Thru	Right	App. Total	Left	Thru	Right	App. Total	Left	Thru	Right	App. Total	Int. Total
Peak Hour Analysis From 04:30 PM to 05:15 PM - Peak 1 of 1																	
Peak Hour for Entire Intersection Begins at 04:30 PM																	
04:30 PM	0	0	0	0	0	0	0	0	0	0	0	0	0	0	0	0	0
04:45 PM	0	0	0	0	0	0	0	0	0	0	0	0	0	0	0	0	0
05:00 PM	0	0	0	0	0	0	0	0	0	0	0	0	0	0	0	0	0
05:15 PM	0	0	0	0	0	0	0	0	0	0	0	0	0	0	0	0	0
Total Volume	0	0	0	0	0	0	0	0	0	0	0	0	0	0	0	0	0
% App. Total	0	0	0		0	0	0		0	0	0		0	0	0		
PHF	.000	.000	.000	.000	.000	.000	.000	.000	.000	.000	.000	.000	.000	.000	.000	.000	.000

Counts Unlimited Inc.
PO Box 1178
Corona, CA 92878
(951) 268-6268

City of Loma Linda
N/S: Campus Street
E/W: Barton Road
Weather: Sunny

File Name : LMLCABAPM
Site Code : 00000097
Start Date : 10/11/2011
Page No : 2

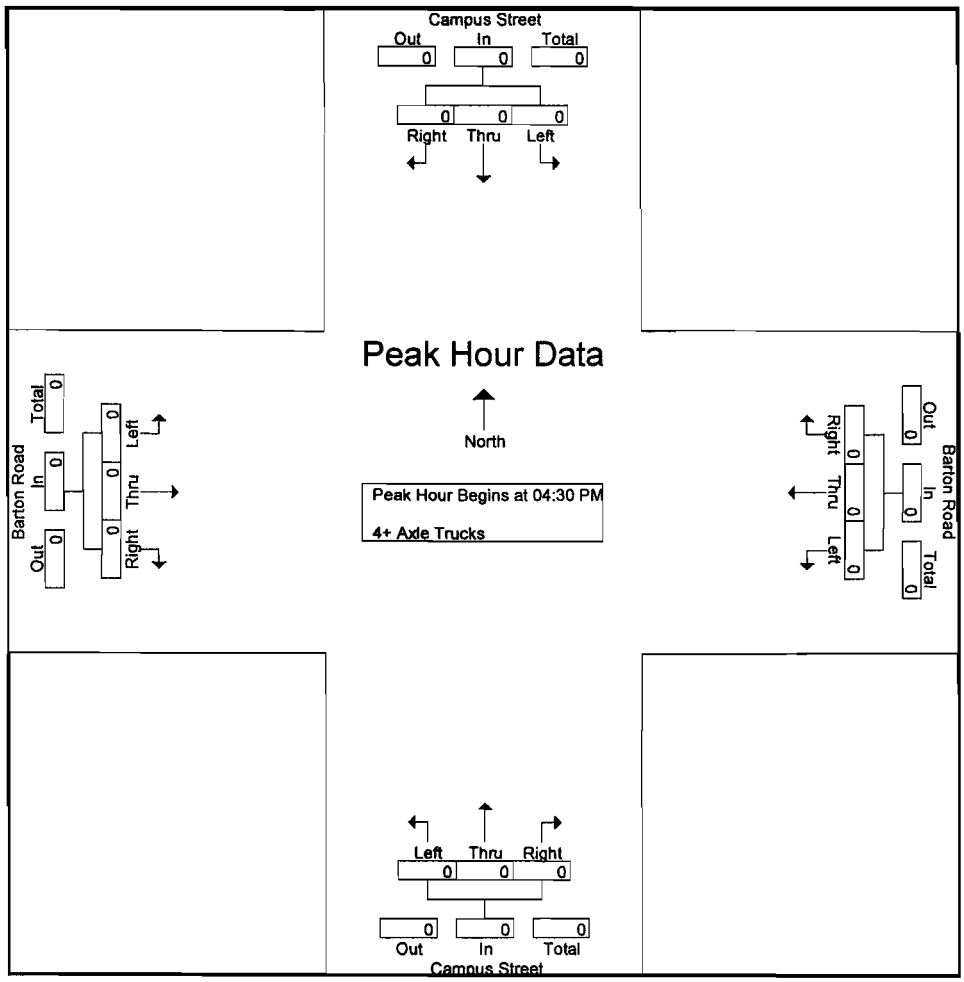

Peak Hour Analysis From 04:30 PM to 05:15 PM - Peak 1 of 1

Peak Hour for Each Approach Begins at:

	04:30 PM				04:30 PM				04:30 PM				04:30 PM			
+0 mins.	0	0	0	0	0	0	0	0	0	0	0	0	0	0	0	0
+15 mins.	0	0	0	0	0	0	0	0	0	0	0	0	0	0	0	0
+30 mins.	0	0	0	0	0	0	0	0	0	0	0	0	0	0	0	0
+45 mins.	0	0	0	0	0	0	0	0	0	0	0	0	0	0	0	0
Total Volume	0	0	0	0	0	0	0	0	0	0	0	0	0	0	0	0
% App. Total	0	0	0		0	0	0		0	0	0		0	0	0	
PHF	.000	.000	.000	.000	.000	.000	.000	.000	.000	.000	.000	.000	.000	.000	.000	.000

NATIONAL DATA AND SURVEYING SERVICES

Axle Count

Project # 11-6101-007 Class

Location: Parkland St & Stewart St City: Loma Linda Date: 10/13/2011 Day: Thursday

CONTROL: 1-Way Stop (SB)

		NL	NT	NR	SL	ST	SR	EL	ET	ER	WL	WT	WR
	LANES:	0	0	0	0	1	0	0	1	0	0	1	0
7:00	CARS	0	0	0	0	0	0	8	39	0	0	40	0
	2-Axle Trucks	0	0	0	1	0	0	0	0	0	0	0	0
	3-Axle Trucks	0	0	0	0	0	0	0	0	0	0	0	0
	4-Axle Trucks	0	0	0	0	0	0	0	0	0	0	0	0
	5-Axle+ Trucks	0	0	0	0	0	0	0	0	0	0	0	0
7:15	CARS	0	0	0	1	0	3	17	46	0	0	36	1
	2-Axle Trucks	0	0	0	0	0	0	0	1	0	0	2	0
	3-Axle Trucks	0	0	0	0	0	0	0	0	0	0	0	0
	4-Axle Trucks	0	0	0	0	0	0	0	0	0	0	0	0
	5-Axle+ Trucks	0	0	0	0	0	0	0	0	0	0	0	0
7:30	CARS	0	0	0	0	0	2	8	71	0	0	57	0
	2-Axle Trucks	0	0	0	0	0	1	0	2	0	0	1	1
	3-Axle Trucks	0	0	0	0	0	0	0	0	0	0	0	0
	4-Axle Trucks	0	0	0	0	0	0	0	0	0	0	0	0
	5-Axle+ Trucks	0	0	0	0	0	0	0	0	0	0	0	0
7:45	CARS	0	0	0	3	0	3	6	47	0	0	51	3
	2-Axle Trucks	0	0	0	0	0	0	0	1	0	0	0	0
	3-Axle Trucks	0	0	0	0	0	0	0	0	0	0	0	0
	4-Axle Trucks	0	0	0	0	0	0	0	0	0	0	0	0
	5-Axle+ Trucks	0	0	0	0	0	0	0	0	0	0	0	0
8:00	CARS	0	0	0	1	0	4	1	58	0	0	40	3
	2-Axle Trucks	0	0	0	0	0	1	0	1	0	0	4	1
	3-Axle Trucks	0	0	0	0	0	0	0	0	0	0	0	0
	4-Axle Trucks	0	0	0	0	0	0	0	0	0	0	0	0
	5-Axle+ Trucks	0	0	0	0	0	0	0	0	0	0	0	0
8:15	CARS	0	0	0	1	0	4	1	43	0	0	38	2
	2-Axle Trucks	0	0	0	0	0	1	0	1	0	0	3	0
	3-Axle Trucks	0	0	0	0	0	0	0	0	0	0	0	0
	4-Axle Trucks	0	0	0	0	0	0	0	0	0	0	0	0
	5-Axle+ Trucks	0	0	0	0	0	0	0	0	0	0	0	0
8:30	CARS	0	0	0	1	0	4	2	59	0	0	48	2
	2-Axle Trucks	0	0	0	0	0	3	2	4	0	0	2	0
	3-Axle Trucks	0	0	0	0	0	0	0	0	0	0	0	0
	4-Axle Trucks	0	0	0	0	0	0	0	0	0	0	0	0
	5-Axle+ Trucks	0	0	0	0	0	0	0	0	0	0	0	0
8:45	CARS	0	0	0	0	0	3	6	42	0	0	40	1
	2-Axle Trucks	0	0	0	0	0	1	0	2	0	0	3	0
	3-Axle Trucks	0	0	0	0	0	0	0	0	0	0	0	0
	4-Axle Trucks	0	0	0	0	0	0	0	0	0	0	0	0
	5-Axle+ Trucks	0	0	0	0	0	0	0	0	0	0	0	0

MOVEMENT TOTALS

	NL	NT	NR	SL	ST	SR	EL	ET	ER	WL	WT	WR
CARS	0	0	0	7	0	23	49	405	0	0	350	12
2-Axle Trucks	0	0	0	1	0	7	2	12	0	0	15	2
3-Axle Trucks	0	0	0	0	0	0	0	0	0	0	0	0
4-Axle Trucks	0	0	0	0	0	0	0	0	0	0	0	0
5-Axle+ Trucks	0	0	0	0	0	0	0	0	0	0	0	0
TOTALS	0	0	0	8	0	30	51	417	0	0	365	14

AM Peak Hr Begins at: 715 AM

PEAK VOLUMES =	0	0	0	5	0	14	32	227	0	0	191	9
PEAK HR. FACTOR:		0.000			0.792			0.799			0.847	

NATIONAL DATA AND SURVEYING SERVICES

Axle Count

Project # 11-6101-007 Class

Location: Parkland St & Stewart St City: Loma Linda Date: 10/13/2011 Day: Thursday

CONTROL: 1-Way Stop (SB)

		NL	NT	NR	SL	ST	SR	EL	ET	ER	WL	WT	WR
	LANES:	0	0	0	0	1	0	0	1	0	0	1	0
16:00	CARS	0	0	0	1	0	4	1	50	0	0	71	1
	2-Axle Trucks	0	0	0	0	0	0	1	3	0	0	1	0
	3-Axle Trucks	0	0	0	0	0	0	0	0	0	0	0	0
	4-Axle Trucks	0	0	0	0	0	0	0	0	0	0	0	0
	5-Axle+ Trucks	0	0	0	0	0	0	0	0	0	0	0	0
16:15	CARS	0	0	0	1	0	4	3	30	0	0	40	0
	2-Axle Trucks	0	0	0	0	0	0	2	2	0	0	1	0
	3-Axle Trucks	0	0	0	0	0	0	0	0	0	0	0	0
	4-Axle Trucks	0	0	0	0	0	0	0	0	0	0	0	0
	5-Axle+ Trucks	0	0	0	0	0	0	0	0	0	0	1	0
16:30	CARS	0	0	0	4	0	9	0	44	0	0	53	1
	2-Axle Trucks	0	0	0	0	0	0	1	2	0	0	0	0
	3-Axle Trucks	0	0	0	0	0	0	0	0	0	0	0	0
	4-Axle Trucks	0	0	0	0	0	0	0	0	0	0	0	0
	5-Axle+ Trucks	0	0	0	0	0	0	0	0	0	0	0	0
16:45	CARS	0	0	0	5	0	6	3	46	0	0	66	2
	2-Axle Trucks	0	0	0	0	0	0	0	0	0	0	0	0
	3-Axle Trucks	0	0	0	0	0	0	0	0	0	0	0	0
	4-Axle Trucks	0	0	0	0	0	0	0	0	0	0	0	0
	5-Axle+ Trucks	0	0	0	0	0	0	0	0	0	0	0	0
17:00	CARS	0	0	0	3	0	4	2	48	0	0	84	1
	2-Axle Trucks	0	0	0	1	0	0	2	1	0	0	0	0
	3-Axle Trucks	0	0	0	0	0	0	0	0	0	0	0	0
	4-Axle Trucks	0	0	0	0	0	0	0	0	0	0	0	0
	5-Axle+ Trucks	0	0	0	0	0	0	0	0	0	0	0	0
17:15	CARS	0	0	0	3	0	3	2	51	0	0	61	1
	2-Axle Trucks	0	0	0	0	0	0	0	1	0	0	0	0
	3-Axle Trucks	0	0	0	0	0	0	0	0	0	0	0	0
	4-Axle Trucks	0	0	0	0	0	0	0	0	0	0	0	0
	5-Axle+ Trucks	0	0	0	0	0	0	0	0	0	0	0	0
17:30	CARS	0	0	0	1	0	4	4	65	0	0	60	3
	2-Axle Trucks	0	0	0	0	0	0	0	0	0	0	1	0
	3-Axle Trucks	0	0	0	0	0	0	0	0	0	0	0	0
	4-Axle Trucks	0	0	0	0	0	0	0	0	0	0	0	0
	5-Axle+ Trucks	0	0	0	0	0	0	0	0	0	0	0	0
17:45	CARS	0	0	0	3	0	5	1	75	0	0	59	4
	2-Axle Trucks	0	0	0	0	0	0	0	2	0	0	0	0
	3-Axle Trucks	0	0	0	0	0	0	0	0	0	0	0	0
	4-Axle Trucks	0	0	0	0	0	0	0	0	0	0	0	0
	5-Axle+ Trucks	0	0	0	0	0	0	0	0	0	0	0	0

MOVEMENT TOTALS

	NL	NT	NR	SL	ST	SR	EL	ET	ER	WL	WT	WR
CARS	0	0	0	21	0	39	16	409	0	0	494	13
2-Axle Trucks	0	0	0	1	0	0	6	11	0	0	3	0
3-Axle Trucks	0	0	0	0	0	0	0	0	0	0	0	0
4-Axle Trucks	0	0	0	0	0	0	0	0	0	0	0	0
5-Axle+ Trucks	0	0	0	0	0	0	0	0	0	0	1	0
TOTALS	0	0	0	22	0	39	22	420	0	0	498	13

PM Peak Hr Begins at: 1700 PM

PEAK VOLUMES =	0	0	0	11	0	16	11	243	0	0	265	9
PEAK HR. FACTOR:		0.000			0.844			0.814			0.806	

NATIONAL DATA AND SURVEYING SERVICES

Axle Count

Project # 11-6101-004 Class

Location: Anderson St & Stewart St City: Loma Linda Date: 10/13/2011 Day: Thursday

CONTROL: Signalized

	LANES:	1	2	0	1	2	0	1	0.5	0.5	1	0.5	0.5
		NL	NT	NR	SL	ST	SR	EL	ET	ER	WL	WT	WR
7:00	CARS	5	55	4	40	71	91	41	10	5	2	8	29
	2-Axle Trucks	0	0	0	0	0	2	1	0	0	0	0	0
	3-Axle Trucks	0	0	0	0	0	0	0	0	0	0	0	0
	4-Axle Trucks	0	0	0	0	0	0	0	0	0	0	0	0
	5-Axle+ Trucks	0	0	0	0	0	0	0	0	0	0	0	0
7:15	CARS	7	51	8	49	114	101	34	20	12	3	15	31
	2-Axle Trucks	0	1	0	0	0	1	3	0	0	1	0	2
	3-Axle Trucks	0	0	0	0	0	0	0	0	0	0	1	0
	4-Axle Trucks	0	0	0	0	0	0	0	0	0	0	0	0
	5-Axle+ Trucks	0	0	0	0	0	0	0	0	0	0	0	0
7:30	CARS	18	88	6	65	138	156	55	17	7	3	23	39
	2-Axle Trucks	0	0	2	0	0	1	0	0	0	2	0	0
	3-Axle Trucks	0	0	0	0	0	0	0	0	0	0	0	0
	4-Axle Trucks	0	0	0	0	0	0	0	0	0	0	0	0
	5-Axle+ Trucks	0	0	0	0	0	0	0	0	0	0	0	0
7:45	CARS	10	74	8	59	153	142	58	12	8	4	14	35
	2-Axle Trucks	0	2	0	0	0	0	2	0	0	0	0	1
	3-Axle Trucks	0	0	0	0	0	0	0	0	0	0	0	0
	4-Axle Trucks	0	0	0	0	0	0	0	0	0	0	0	0
	5-Axle+ Trucks	0	0	0	0	0	0	0	0	0	0	0	0
8:00	CARS	12	55	5	59	218	119	41	15	12	6	11	36
	2-Axle Trucks	0	3	0	1	1	3	0	1	0	1	1	0
	3-Axle Trucks	0	0	0	0	0	0	0	0	0	0	0	0
	4-Axle Trucks	0	0	0	0	0	0	0	0	0	0	0	0
	5-Axle+ Trucks	0	0	0	0	0	0	0	0	0	0	0	0
8:15	CARS	5	49	6	48	127	73	20	13	6	3	7	35
	2-Axle Trucks	0	2	0	1	1	0	1	0	1	0	2	1
	3-Axle Trucks	0	0	0	0	0	0	0	0	0	0	0	0
	4-Axle Trucks	0	0	0	0	0	0	0	0	0	0	0	0
	5-Axle+ Trucks	0	0	0	0	0	0	0	0	0	0	0	0
8:30	CARS	7	57	2	47	143	40	22	23	11	5	25	25
	2-Axle Trucks	0	3	0	3	4	0	0	1	0	2	3	0
	3-Axle Trucks	0	0	0	0	0	0	0	0	0	0	0	0
	4-Axle Trucks	0	1	0	0	0	0	0	0	0	0	0	0
	5-Axle+ Trucks	0	0	0	0	0	0	0	0	0	0	0	0
8:45	CARS	11	60	5	34	146	49	19	16	10	3	14	32
	2-Axle Trucks	0	1	1	0	0	2	1	0	0	0	2	0
	3-Axle Trucks	0	0	0	0	1	0	0	0	0	0	0	0
	4-Axle Trucks	0	0	0	0	0	0	0	0	0	0	0	0
	5-Axle+ Trucks	0	0	0	0	0	0	0	0	0	0	0	0

MOVEMENT TOTALS

CARS	75	489	44	401	1110	771	290	126	71	29	117	262
2-Axle Trucks	0	12	3	5	6	9	8	2	1	6	8	4
3-Axle Trucks	0	0	0	0	1	0	0	0	0	0	1	0
4-Axle Trucks	0	1	0	0	0	0	0	0	0	0	0	0
5-Axle+ Trucks	0	0	0	0	0	0	0	0	0	0	0	0
TOTALS	75	502	47	406	1117	780	298	128	72	35	126	266
	NL	*NT*	*NR*	*SL*	*ST*	*SR*	*EL*	*ET*	*ER*	*WL*	*WT*	*WR*

AM Peak Hr Begins at: 715 AM

PEAK VOLUMES =	47	274	29	233	624	523	193	65	39	20	65	144
PEAK HR. FACTOR:		0.768			0.860			0.928			0.854	

NATIONAL DATA AND SURVEYING SERVICES

Axle Count

Project # 11-6101-004 Class

Location: Anderson St & Stewart St City: Loma Linda Date: 10/13/2011 Day: Thursday

CONTROL: Signalized

	LANES:	1	2	0	1	2	0	1	0.5	0.5	1	0.5	0.5
		NL	NT	NR	SL	ST	SR	EL	ET	ER	WL	WT	WR
16:00	CARS	6	116	1	27	96	45	48	30	6	4	20	72
	2-Axle Trucks	0	2	0	0	0	1	1	2	0	0	0	0
	3-Axle Trucks	0	0	0	0	0	0	0	0	0	0	0	0
	4-Axle Trucks	0	0	0	0	0	0	0	0	0	0	0	0
	5-Axle+ Trucks	0	0	0	0	0	0	0	0	0	0	0	0
16:15	CARS	9	114	4	24	106	40	74	17	15	4	13	46
	2-Axle Trucks	0	0	0	1	0	1	0	1	0	0	0	1
	3-Axle Trucks	0	0	0	0	0	0	0	0	0	0	0	0
	4-Axle Trucks	0	0	0	0	0	0	0	0	0	0	0	0
	5-Axle+ Trucks	0	0	0	0	1	0	0	0	0	1	0	0
16:30	CARS	17	158	1	25	96	42	62	22	12	3	12	50
	2-Axle Trucks	0	0	0	0	0	0	1	2	0	0	0	1
	3-Axle Trucks	0	0	0	0	0	0	0	0	0	0	0	0
	4-Axle Trucks	0	0	0	0	0	0	0	0	0	0	0	0
	5-Axle+ Trucks	0	0	0	0	0	0	0	0	0	0	0	0
16:45	CARS	8	127	6	33	84	64	64	28	5	5	16	71
	2-Axle Trucks	0	0	0	0	0	1	1	0	0	0	0	0
	3-Axle Trucks	0	0	0	0	0	0	0	0	0	0	0	0
	4-Axle Trucks	0	0	0	0	0	0	0	0	0	0	0	0
	5-Axle+ Trucks	0	0	0	0	0	0	0	0	0	0	0	0
17:00	CARS	9	133	2	37	96	58	40	19	12	3	25	77
	2-Axle Trucks	0	0	0	0	0	2	0	1	0	0	0	1
	3-Axle Trucks	0	0	0	0	0	0	0	0	0	0	0	0
	4-Axle Trucks	0	0	0	0	0	0	0	0	0	0	0	0
	5-Axle+ Trucks	0	0	0	0	0	0	0	0	0	0	0	0
17:15	CARS	7	139	2	24	107	50	43	40	20	6	23	63
	2-Axle Trucks	0	0	0	0	0	1	1	1	0	0	0	0
	3-Axle Trucks	0	0	0	0	0	0	0	0	0	0	0	0
	4-Axle Trucks	0	0	0	0	0	0	0	0	0	0	0	0
	5-Axle+ Trucks	0	0	0	0	0	0	0	0	0	0	0	0
17:30	CARS	8	118	5	48	89	50	53	29	21	4	18	78
	2-Axle Trucks	0	3	0	0	0	3	0	0	0	1	0	0
	3-Axle Trucks	0	0	0	0	0	0	0	0	0	0	0	0
	4-Axle Trucks	0	0	0	0	0	0	0	0	0	0	0	0
	5-Axle+ Trucks	0	0	0	0	0	0	0	0	0	0	0	0
17:45	CARS	10	80	7	55	96	48	64	39	18	6	15	51
	2-Axle Trucks	0	1	0	0	1	1	2	0	0	1	0	0
	3-Axle Trucks	0	0	0	0	0	0	0	0	0	0	0	0
	4-Axle Trucks	0	0	0	0	0	0	0	0	0	0	0	0
	5-Axle+ Trucks	0	0	0	0	0	0	0	0	0	0	0	0

MOVEMENT TOTALS

CARS	74	985	28	273	770	397	448	224	109	35	142	508
2-Axle Trucks	0	6	0	1	1	10	6	7	0	2	0	3
3-Axle Trucks	0	0	0	0	0	0	0	0	0	0	0	0
4-Axle Trucks	0	0	0	0	0	0	0	0	0	0	0	0
5-Axle+ Trucks	0	0	0	0	1	0	0	0	0	1	0	0
TOTALS	74	991	28	274	772	407	454	231	109	38	142	511
	NL	*NT*	*NR*	*SL*	*ST*	*SR*	*EL*	*ET*	*ER*	*WL*	*WT*	*WR*

PM Peak Hr Begins at: 1645 PM

PEAK VOLUMES =	32	520	15	142	376	229	202	118	58	19	82	290
PEAK HR. FACTOR:		0.958			0.968			0.900			0.922	

NATIONAL DATA AND SURVEYING SERVICES

Axle Count

Project # 11-6101-005 Class

Location: Anderson St & University Ave City: Loma Linda Date: 10/13/2011 Day: Thursday

CONTROL: Signalized

	LANES:	1	2	0	0	2	1	1	0	1	0	0	0
		NL	NT	NR	SL	ST	SR	EL	ET	ER	WL	WT	WR
7:00	CARS	9	58	0	0	71	12	0	0	2	0	0	0
	2-Axle Trucks	0	0	0	0	0	0	0	0	0	0	0	0
	3-Axle Trucks	0	0	0	0	0	0	0	0	0	0	0	0
	4-Axle Trucks	0	0	0	0	0	0	0	0	0	0	0	0
	5-Axle+ Trucks	0	0	0	0	0	0	0	0	0	0	0	0
7:15	CARS	9	71	0	0	107	20	3	0	3	0	0	0
	2-Axle Trucks	0	1	0	0	1	0	0	0	0	0	0	0
	3-Axle Trucks	0	0	0	0	0	0	0	0	0	0	0	0
	4-Axle Trucks	0	0	0	0	0	0	0	0	0	0	0	0
	5-Axle+ Trucks	0	0	0	0	0	0	0	0	0	0	0	0
7:30	CARS	11	105	0	0	118	20	6	0	2	0	0	0
	2-Axle Trucks	0	2	0	0	1	1	0	0	0	0	0	0
	3-Axle Trucks	0	0	0	0	0	0	0	0	0	0	0	0
	4-Axle Trucks	0	0	0	0	0	0	0	0	0	0	0	0
	5-Axle+ Trucks	0	0	0	0	0	0	0	0	0	0	0	0
7:45	CARS	26	81	0	0	138	30	10	0	6	0	0	0
	2-Axle Trucks	0	2	0	0	0	0	0	0	0	0	0	0
	3-Axle Trucks	0	0	0	0	0	0	0	0	0	0	0	0
	4-Axle Trucks	0	0	0	0	0	0	0	0	0	0	0	0
	5-Axle+ Trucks	0	0	0	0	0	0	0	0	0	0	0	0
8:00	CARS	14	69	0	0	197	50	8	0	9	0	0	0
	2-Axle Trucks	1	3	0	0	2	0	0	0	0	0	0	0
	3-Axle Trucks	0	0	0	0	0	0	0	0	0	0	0	0
	4-Axle Trucks	0	0	0	0	0	0	0	0	0	0	0	0
	5-Axle+ Trucks	0	0	0	0	0	0	0	0	0	0	0	0
8:15	CARS	11	54	0	0	117	19	6	0	6	0	0	0
	2-Axle Trucks	0	1	0	0	1	1	1	0	0	0	0	0
	3-Axle Trucks	0	0	0	0	0	0	0	0	0	0	0	0
	4-Axle Trucks	0	0	0	0	0	0	0	0	0	0	0	0
	5-Axle+ Trucks	0	0	0	0	0	0	0	0	0	0	0	0
8:30	CARS	6	67	0	0	129	23	3	0	5	0	0	0
	2-Axle Trucks	0	2	0	0	3	3	1	0	0	0	0	0
	3-Axle Trucks	0	0	0	0	0	0	0	0	0	0	0	0
	4-Axle Trucks	0	1	0	0	0	0	0	0	0	0	0	0
	5-Axle+ Trucks	0	0	0	0	0	0	0	0	0	0	0	0
8:45	CARS	12	66	0	0	138	18	3	0	3	0	0	0
	2-Axle Trucks	1	2	0	0	0	1	0	0	0	0	0	0
	3-Axle Trucks	0	0	0	0	1	0	0	0	0	0	0	0
	4-Axle Trucks	0	0	0	0	0	0	0	0	0	0	0	0
	5-Axle+ Trucks	0	0	0	0	0	0	0	0	0	0	0	0

MOVEMENT TOTALS

CARS	98	571	0	0	1015	192	39	0	36	0	0	0
2-Axle Trucks	2	13	0	0	8	6	2	0	0	0	0	0
3-Axle Trucks	0	0	0	0	1	0	0	0	0	0	0	0
4-Axle Trucks	0	1	0	0	0	0	0	0	0	0	0	0
5-Axle+ Trucks	0	0	0	0	0	0	0	0	0	0	0	0
TOTALS	100	585	0	0	1024	198	41	0	36	0	0	0
	NL	*NT*	*NR*	*SL*	*ST*	*SR*	*EL*	*ET*	*ER*	*WL*	*WT*	*WR*

AM Peak Hr Begins at: 730 AM

PEAK VOLUMES =	63	317	0	0	574	121	31	0	23	0	0	0
PEAK HR. FACTOR:		0.805			0.698			0.794			0.000	

NATIONAL DATA AND SURVEYING SERVICES

Axle Count

Project # 11-6101-005 Class

Location: Anderson St & University Ave City: Loma Linda Date: 10/13/2011 Day: Thursday

CONTROL: Signalized

		NL	NT	NR	SL	ST	SR	EL	ET	ER	WL	WT	WR
	LANES:	1	2	0	0	2	1	1	0	1	0	0	0
16:00	CARS	23	118	0	0	96	9	8	0	8	0	0	0
	2-Axle Trucks	1	2	0	0	0	0	0	0	0	0	0	0
	3-Axle Trucks	0	0	0	0	0	0	0	0	0	0	0	0
	4-Axle Trucks	0	0	0	0	0	0	0	0	0	0	0	0
	5-Axle+ Trucks	0	0	0	0	0	0	0	0	0	0	0	0
16:15	CARS	13	116	0	0	115	11	4	0	10	0	0	0
	2-Axle Trucks	0	0	0	0	0	0	0	0	0	0	0	0
	3-Axle Trucks	0	0	0	0	0	0	0	0	0	0	0	0
	4-Axle Trucks	0	0	0	0	0	0	0	0	0	0	0	0
	5-Axle+ Trucks	0	0	0	0	2	0	0	0	0	0	0	0
16:30	CARS	12	162	0	0	98	15	19	0	6	0	0	0
	2-Axle Trucks	0	0	0	0	0	0	0	0	0	0	0	0
	3-Axle Trucks	0	0	0	0	0	0	0	0	0	0	0	0
	4-Axle Trucks	0	0	0	0	0	0	0	0	0	0	0	0
	5-Axle+ Trucks	0	0	0	0	0	0	0	0	0	0	0	0
16:45	CARS	16	119	0	0	81	13	12	0	6	0	0	0
	2-Axle Trucks	0	0	0	0	0	0	0	0	0	0	0	0
	3-Axle Trucks	0	0	0	0	0	0	0	0	0	0	0	0
	4-Axle Trucks	0	0	0	0	0	0	0	0	0	0	0	0
	5-Axle+ Trucks	0	0	0	0	0	0	0	0	0	0	0	0
17:00	CARS	15	133	0	0	105	10	19	0	10	0	0	0
	2-Axle Trucks	0	0	0	0	0	0	0	0	0	0	0	0
	3-Axle Trucks	0	0	0	0	0	0	0	0	0	0	0	0
	4-Axle Trucks	0	0	0	0	0	0	0	0	0	0	0	0
	5-Axle+ Trucks	0	0	0	0	0	0	0	0	0	0	0	0
17:15	CARS	15	141	0	0	121	15	6	0	8	0	0	0
	2-Axle Trucks	0	0	0	0	0	0	0	0	0	0	0	0
	3-Axle Trucks	0	0	0	0	0	0	0	0	0	0	0	0
	4-Axle Trucks	0	0	0	0	0	0	0	0	0	0	0	0
	5-Axle+ Trucks	0	0	0	0	0	0	0	0	0	0	0	0
17:30	CARS	9	116	0	0	97	11	6	0	5	0	0	0
	2-Axle Trucks	0	3	0	0	1	0	0	0	0	0	0	0
	3-Axle Trucks	0	0	0	0	0	0	0	0	0	0	0	0
	4-Axle Trucks	0	0	0	0	0	0	0	0	0	0	0	0
	5-Axle+ Trucks	0	0	0	0	0	0	0	0	0	0	0	0
17:45	CARS	16	91	0	0	97	26	5	0	4	0	0	0
	2-Axle Trucks	0	0	0	0	1	1	1	0	0	0	0	0
	3-Axle Trucks	0	0	0	0	0	0	0	0	0	0	0	0
	4-Axle Trucks	0	0	0	0	0	0	0	0	0	0	0	0
	5-Axle+ Trucks	0	0	0	0	0	0	0	0	0	0	0	0

MOVEMENT TOTALS

	NL	NT	NR	SL	ST	SR	EL	ET	ER	WL	WT	WR
CARS	119	996	0	0	810	110	79	0	57	0	0	0
2-Axle Trucks	1	5	0	0	2	1	1	0	0	0	0	0
3-Axle Trucks	0	0	0	0	0	0	0	0	0	0	0	0
4-Axle Trucks	0	0	0	0	0	0	0	0	0	0	0	0
5-Axle+ Trucks	0	0	0	0	2	0	0	0	0	0	0	0
TOTALS	120	1001	0	0	814	111	80	0	57	0	0	0

PM Peak Hr Begins at: 1630 PM

PEAK VOLUMES =	58	555	0	0	405	53	56	0	30	0	0	0
PEAK HR. FACTOR:		0.881			0.842			0.741			0.000	

NATIONAL DATA AND SURVEYING SERVICES

Axle Count

Project # 11-6101-006 Class

Location: Anderson St & Mound St City: Loma Linda Date: 10/13/2011 Day: Thursday

CONTROL: 4-Way Stop

	LANES:	1.5	0.5	1	0	1	0	1	0.5	1.5	0	1	0
		NL	NT	NR	SL	ST	SR	EL	ET	ER	WL	WT	WR
7:00	CARS	64	15	9	0	1	2	10	8	46	3	2	3
	2-Axle Trucks	0	1	0	0	0	0	0	0	0	0	0	0
	3-Axle Trucks	0	0	0	0	0	0	0	0	0	0	0	0
	4-Axle Trucks	0	0	0	0	0	0	0	0	0	0	0	0
	5-Axle+ Trucks	0	0	0	0	0	0	0	0	0	0	0	0
7:15	CARS	73	22	17	5	2	1	19	10	80	3	3	2
	2-Axle Trucks	1	0	0	0	0	0	0	0	0	1	0	1
	3-Axle Trucks	0	0	0	0	0	0	0	0	0	0	0	0
	4-Axle Trucks	0	0	0	0	0	0	0	0	0	0	0	0
	5-Axle+ Trucks	0	0	0	0	0	0	0	0	0	0	0	0
7:30	CARS	117	21	21	5	2	2	3	27	83	5	2	3
	2-Axle Trucks	2	0	0	0	0	0	0	0	0	1	0	0
	3-Axle Trucks	0	0	0	0	0	0	0	0	0	0	0	0
	4-Axle Trucks	0	0	0	0	0	0	0	0	0	0	0	0
	5-Axle+ Trucks	0	0	0	0	0	0	0	0	0	0	0	0
7:45	CARS	89	14	16	3	8	3	2	29	114	10	11	2
	2-Axle Trucks	2	0	0	0	0	0	0	0	0	0	0	0
	3-Axle Trucks	0	0	0	0	0	0	0	0	0	0	0	0
	4-Axle Trucks	0	0	0	0	0	0	0	0	0	0	0	0
	5-Axle+ Trucks	0	0	0	0	0	0	0	0	0	0	0	0
8:00	CARS	73	15	9	3	4	4	3	27	169	3	3	0
	2-Axle Trucks	3	0	0	0	0	0	0	1	0	2	0	0
	3-Axle Trucks	0	0	0	0	0	0	0	0	0	0	0	0
	4-Axle Trucks	0	0	0	0	0	0	0	0	0	0	0	0
	5-Axle+ Trucks	0	0	0	0	0	0	0	0	0	0	0	0
8:15	CARS	58	15	12	0	4	2	2	21	100	2	3	2
	2-Axle Trucks	1	0	0	0	0	0	0	0	0	2	0	0
	3-Axle Trucks	0	0	0	0	0	0	0	0	0	0	0	0
	4-Axle Trucks	0	0	0	0	0	0	0	0	0	0	0	0
	5-Axle+ Trucks	0	0	0	0	0	0	0	0	0	0	0	0
8:30	CARS	65	7	14	4	2	2	8	24	101	1	4	4
	2-Axle Trucks	2	0	1	1	0	0	1	1	0	3	0	0
	3-Axle Trucks	0	0	0	0	0	0	0	0	0	0	0	0
	4-Axle Trucks	1	0	0	0	0	0	0	0	0	0	0	0
	5-Axle+ Trucks	0	0	0	0	0	0	0	0	0	0	0	0
8:45	CARS	67	8	12	2	3	3	1	26	113	3	7	2
	2-Axle Trucks	2	0	0	0	0	1	0	0	0	0	0	0
	3-Axle Trucks	0	0	0	0	0	0	0	0	1	0	0	0
	4-Axle Trucks	0	0	0	0	0	0	0	0	0	0	0	0
	5-Axle+ Trucks	0	0	0	0	0	0	0	0	0	0	0	0

MOVEMENT TOTALS

CARS	606	117	110	22	26	19	48	172	806	30	35	18
2-Axle Trucks	13	1	1	1	0	1	1	2	0	9	0	1
3-Axle Trucks	0	0	0	0	0	0	0	0	1	0	0	0
4-Axle Trucks	1	0	0	0	0	0	0	0	0	0	0	0
5-Axle+ Trucks	0	0	0	0	0	0	0	0	0	0	0	0
TOTALS	620	118	111	23	26	20	49	174	807	39	35	19
	NL	*NT*	*NR*	*SL*	*ST*	*SR*	*EL*	*ET*	*ER*	*WL*	*WT*	*WR*

AM Peak Hr Begins at: 715 AM

PEAK VOLUMES =	360	72	63	16	16	10	27	94	446	25	19	8
PEAK HR. FACTOR:		0.769			0.750			0.709			0.565	

NATIONAL DATA AND SURVEYING SERVICES

Axle Count

Project # 11-6101-006 Class

Location: Anderson St & Mound St City: Loma Linda Date: 10/13/2011 Day: Thursday

CONTROL: 4-Way Stop

		NL	NT	NR	SL	ST	SR	EL	ET	ER	WL	WT	WR
	LANES:	1.5	0.5	1	0	1	0	1	0.5	1.5	0	1	0
16:00	CARS	114	7	7	3	6	5	5	13	92	18	20	2
	2-Axle Trucks	1	1	0	0	0	2	0	0	0	0	0	0
	3-Axle Trucks	0	0	0	0	0	0	0	0	0	0	0	0
	4-Axle Trucks	0	0	0	0	0	0	0	0	0	0	0	0
	5-Axle+ Trucks	0	0	0	0	0	0	0	0	0	0	0	0
16:15	CARS	109	6	9	3	12	3	0	26	102	9	15	5
	2-Axle Trucks	0	0	0	0	0	0	0	0	0	1	0	0
	3-Axle Trucks	0	0	0	0	0	0	0	0	0	0	0	0
	4-Axle Trucks	0	0	0	0	0	0	0	0	0	0	0	0
	5-Axle+ Trucks	0	0	0	0	0	0	0	1	1	0	0	0
16:30	CARS	156	6	10	0	18	1	3	17	78	10	16	0
	2-Axle Trucks	0	0	0	0	0	0	0	0	0	2	0	0
	3-Axle Trucks	0	0	0	0	0	0	0	0	0	0	0	0
	4-Axle Trucks	0	0	0	0	0	0	0	0	0	0	0	0
	5-Axle+ Trucks	0	0	0	0	0	0	0	0	0	0	0	0
16:45	CARS	122	8	8	1	10	3	2	8	86	11	11	2
	2-Axle Trucks	0	0	0	0	0	0	0	0	0	1	0	0
	3-Axle Trucks	0	0	0	0	0	0	0	0	0	0	0	0
	4-Axle Trucks	0	0	0	0	0	0	0	0	0	0	0	0
	5-Axle+ Trucks	0	0	0	0	0	0	0	0	0	0	0	0
17:00	CARS	118	10	13	2	21	1	1	13	103	7	28	1
	2-Axle Trucks	0	0	0	0	0	0	0	0	0	0	0	0
	3-Axle Trucks	0	0	0	0	0	0	0	0	0	0	0	0
	4-Axle Trucks	0	0	0	0	0	0	0	0	0	0	0	0
	5-Axle+ Trucks	0	0	0	0	0	0	0	0	0	0	0	0
17:15	CARS	133	8	14	5	8	3	4	16	113	11	19	0
	2-Axle Trucks	0	0	0	0	0	0	0	0	0	1	0	0
	3-Axle Trucks	0	0	0	0	0	0	0	0	0	0	0	0
	4-Axle Trucks	0	0	0	0	0	0	0	0	0	0	0	0
	5-Axle+ Trucks	0	0	0	0	0	0	0	0	0	0	0	0
17:30	CARS	106	5	9	6	5	3	4	21	82	12	16	1
	2-Axle Trucks	3	0	0	0	0	0	0	0	1	0	0	0
	3-Axle Trucks	0	0	0	0	0	0	0	0	0	0	0	0
	4-Axle Trucks	0	0	0	0	0	0	0	0	0	0	0	0
	5-Axle+ Trucks	0	0	0	0	0	0	0	0	0	0	0	0
17:45	CARS	88	7	7	4	8	6	3	20	84	9	10	0
	2-Axle Trucks	0	0	0	0	0	0	0	0	1	1	0	0
	3-Axle Trucks	0	0	0	0	0	0	0	0	0	0	0	0
	4-Axle Trucks	0	0	0	0	0	0	0	0	0	0	0	0
	5-Axle+ Trucks	0	0	0	0	0	0	0	0	0	0	0	0

MOVEMENT TOTALS

	NL	NT	NR	SL	ST	SR	EL	ET	ER	WL	WT	WR
CARS	946	57	77	24	88	25	22	134	740	87	135	11
2-Axle Trucks	4	1	0	0	0	2	0	0	2	6	0	0
3-Axle Trucks	0	0	0	0	0	0	0	0	0	0	0	0
4-Axle Trucks	0	0	0	0	0	0	0	0	0	0	0	0
5-Axle+ Trucks	0	0	0	0	0	0	0	1	1	0	0	0
TOTALS	950	58	77	24	88	27	22	135	743	93	135	11
	NL	*NT*	*NR*	*SL*	*ST*	*SR*	*EL*	*ET*	*ER*	*WL*	*WT*	*WR*

PM Peak Hr Begins at: 1630 PM

PEAK VOLUMES =	529	32	45	8	57	8	10	54	380	43	74	3
PEAK HR. FACTOR:		0.881			0.760			0.835			0.833	

Counts Unlimited Inc.
PO Box 1178
Corona, CA 92878
(951) 268-6268

City of Loma Linda
N/S: Anderson Street
E/W: Taylor Street
Weather: Sunny

File Name : LMLANTAAM
Site Code : 00000092
Start Date : 10/12/2011
Page No : 1

Groups Printed- Passenger Vehicles - Large 2 Axle Vehicles - 3 Axle Vehicles - 4+ Axle Trucks

	Anderson Street Southbound			Anderson Street Northbound			Taylor Street Eastbound			
Start Time	Thru	Right	App. Total	Left	Thru	App. Total	Left	Right	App. Total	Int. Total
07:00 AM	69	3	72	7	74	81	0	0	0	153
07:15 AM	80	6	86	10	104	114	0	0	0	200
07:30 AM	92	10	102	14	158	172	0	0	0	274
07:45 AM	129	9	138	40	142	182	0	0	0	320
Total	370	28	398	71	478	549	0	0	0	947
08:00 AM	133	14	147	21	90	111	0	0	0	258
08:15 AM	116	8	124	16	78	94	1	0	1	219
08:30 AM	96	7	103	10	77	87	0	0	0	190
08:45 AM	111	9	120	17	91	108	0	0	0	228
Total	456	38	494	64	336	400	1	0	1	895
Grand Total	826	66	892	135	814	949	1	0	1	1842
Apprch %	92.6	7.4		14.2	85.8		100	0		
Total %	44.8	3.6	48.4	7.3	44.2	51.5	0.1	0	0.1	
Passenger Vehicles	810	66	876	135	798	933	1	0	1	1810
% Passenger Vehicles	98.1	100	98.2	100	98	98.3	100	0	100	98.3
Large 2 Axle Vehicles	13	0	13	0	13	13	0	0	0	26
% Large 2 Axle Vehicles	1.6	0	1.5	0	1.6	1.4	0	0	0	1.4
3 Axle Vehicles	3	0	3	0	3	3	0	0	0	6
% 3 Axle Vehicles	0.4	0	0.3	0	0.4	0.3	0	0	0	0.3
4+ Axle Trucks	0	0	0	0	0	0	0	0	0	0
% 4+ Axle Trucks	0	0	0	0	0	0	0	0	0	0

	Anderson Street Southbound			Anderson Street Northbound			Taylor Street Eastbound			
Start Time	Thru	Right	App. Total	Left	Thru	App. Total	Left	Right	App. Total	Int. Total
Peak Hour Analysis From 07:00 AM to 08:45 AM - Peak 1 of 1										
Peak Hour for Entire Intersection Begins at 07:30 AM										
07:30 AM	92	10	102	14	**158**	172	0	0	0	274
07:45 AM	129	9	138	**40**	142	**182**	0	0	0	**320**
08:00 AM	**133**	**14**	**147**	21	90	111	0	0	0	258
08:15 AM	116	8	124	16	78	94	**1**	0	**1**	219
Total Volume	470	41	511	91	468	559	1	0	1	1071
% App. Total	92	8		16.3	83.7		100	0		
PHF	.883	.732	.869	.569	.741	.768	.250	.000	.250	.837

Counts Unlimited Inc.
PO Box 1178
Corona, CA 92878
(951) 268-6268

City of Loma Linda
N/S: Anderson Street
E/W: Taylor Street
Weather: Sunny

File Name : LMLANTAAM
Site Code : 00000092
Start Date : 10/12/2011
Page No : 2

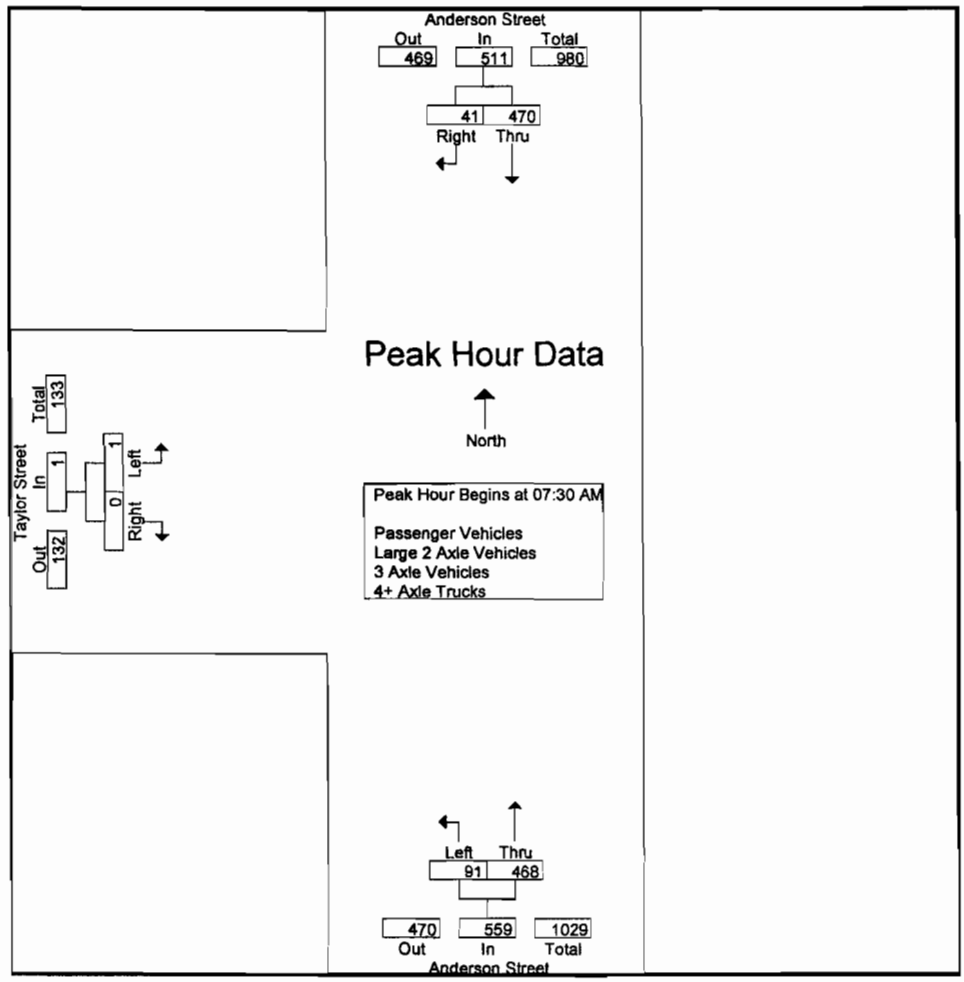

Peak Hour Analysis From 07:00 AM to 08:45 AM - Peak 1 of 1
Peak Hour for Each Approach Begins at:

	07:45 AM			07:15 AM			07:30 AM		
+0 mins.	129	9	138	10	104	114	0	0	0
+15 mins.	**133**	**14**	**147**	14	**158**	172	0	0	0
+30 mins.	116	8	124	**40**	142	**182**	0	0	0
+45 mins.	96	7	103	21	90	111	1	0	1
Total Volume	474	38	512	85	494	579	1	0	1
% App. Total	92.6	7.4		14.7	85.3		100	0	
PHF	.891	.679	.871	.531	.782	.795	.250	.000	.250

Counts Unlimited Inc.
PO Box 1178
Corona, CA 92878
(951) 268-6268

City of Loma Linda
N/S: Anderson Street
E/W: Taylor Street
Weather: Sunny

File Name : LMLANTAAM
Site Code : 00000092
Start Date : 10/12/2011
Page No : 1

Groups Printed- Passenger Vehicles

	Anderson Street Southbound			Anderson Street Northbound			Taylor Street Eastbound			
Start Time	Thru	Right	App. Total	Left	Thru	App. Total	Left	Right	App. Total	Int. Total
07:00 AM	67	3	70	7	72	79	0	0	0	149
07:15 AM	78	6	84	10	102	112	0	0	0	196
07:30 AM	91	10	101	14	156	170	0	0	0	271
07:45 AM	126	9	135	40	140	180	0	0	0	315
Total	362	28	390	71	470	541	0	0	0	931
08:00 AM	133	14	147	21	87	108	0	0	0	255
08:15 AM	115	8	123	16	76	92	1	0	1	216
08:30 AM	93	7	100	10	76	86	0	0	0	186
08:45 AM	107	9	116	17	89	106	0	0	0	222
Total	448	38	486	64	328	392	1	0	1	879
Grand Total	810	66	876	135	798	933	1	0	1	1810
Apprch %	92.5	7.5		14.5	85.5		100	0		
Total %	44.8	3.6	48.4	7.5	44.1	51.5	0.1	0	0.1	

	Anderson Street Southbound			Anderson Street Northbound			Taylor Street Eastbound			
Start Time	Thru	Right	App. Total	Left	Thru	App. Total	Left	Right	App. Total	Int. Total
Peak Hour Analysis From 07:30 AM to 08:15 AM - Peak 1 of 1										
Peak Hour for Entire Intersection Begins at 07:30 AM										
07:30 AM	91	10	101	14	**156**	170	0	0	0	271
07:45 AM	126	9	135	**40**	140	**180**	0	0	0	**315**
08:00 AM	**133**	**14**	**147**	21	87	108	0	0	0	255
08:15 AM	115	8	123	16	76	92	**1**	0	**1**	216
Total Volume	465	41	506	91	459	550	1	0	1	1057
% App. Total	91.9	8.1		16.5	83.5		100	0		
PHF	.874	.732	.861	.569	.736	.764	.250	.000	.250	.839

Counts Unlimited Inc.
PO Box 1178
Corona, CA 92878
(951) 268-6268

City of Loma Linda
N/S: Anderson Street
E/W: Taylor Street
Weather: Sunny

File Name : LMLANTAAM
Site Code : 00000092
Start Date : 10/12/2011
Page No : 2

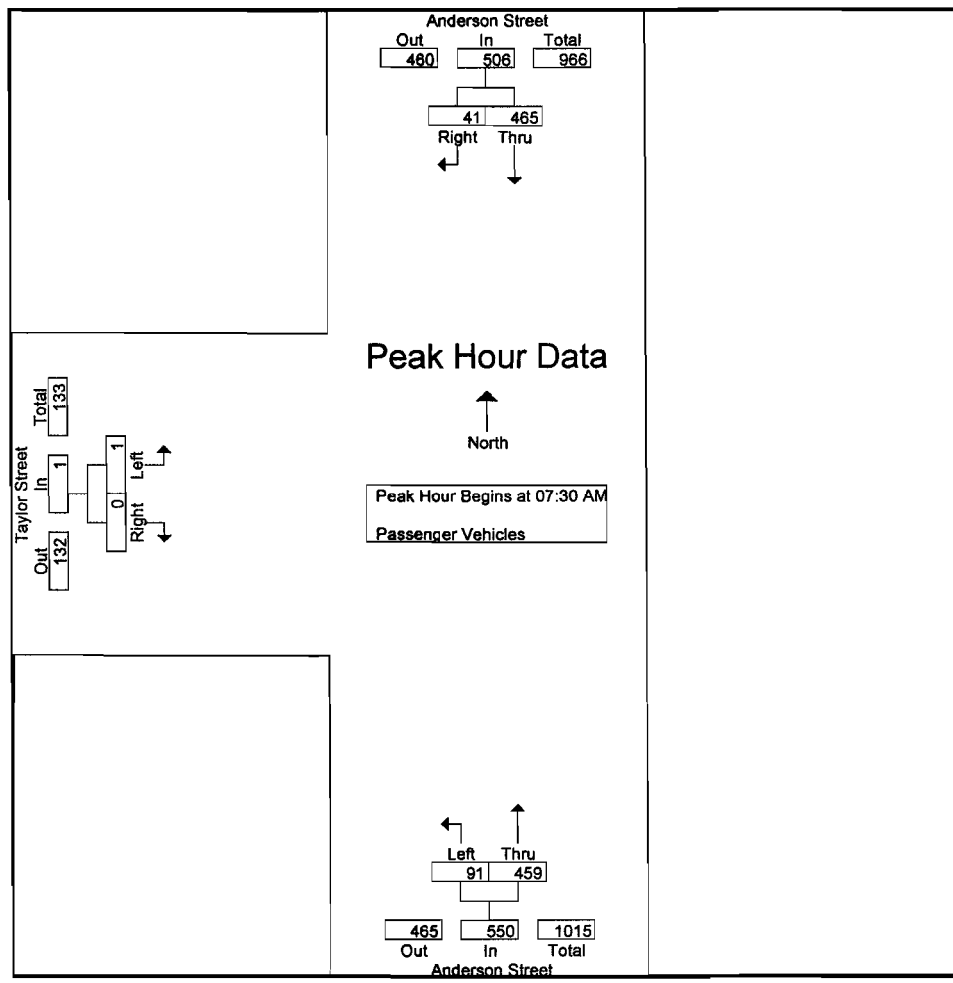

Peak Hour Analysis From 07:30 AM to 08:15 AM - Peak 1 of 1
Peak Hour for Each Approach Begins at:

	07:30 AM			07:30 AM			07:30 AM		
+0 mins.	91	10	101	14	**156**	170	0	0	0
+15 mins.	126	9	135	**40**	140	**180**	0	0	0
+30 mins.	**133**	**14**	**147**	21	87	108	0	0	0
+45 mins.	115	8	123	16	76	92	**1**	0	**1**
Total Volume	465	41	506	91	459	550	1	0	1
% App. Total	91.9	8.1		16.5	83.5		100	0	
PHF	.874	.732	.861	.569	.736	.764	.250	.000	.250

Counts Unlimited Inc.
PO Box 1178
Corona, CA 92878
(951) 268-6268

City of Loma Linda
N/S: Anderson Street
E/W: Taylor Street
Weather: Sunny

File Name : LMLANTAAM
Site Code : 00000092
Start Date : 10/12/2011
Page No : 1

Groups Printed- Large 2 Axle Vehicles

	Anderson Street Southbound			Anderson Street Northbound			Taylor Street Eastbound			
Start Time	Thru	Right	App. Total	Left	Thru	App. Total	Left	Right	App. Total	Int. Total
07:00 AM	2	0	2	0	2	2	0	0	0	4
07:15 AM	1	0	1	0	1	1	0	0	0	2
07:30 AM	1	0	1	0	2	2	0	0	0	3
07:45 AM	3	0	3	0	2	2	0	0	0	5
Total	7	0	7	0	7	7	0	0	0	14
08:00 AM	0	0	0	0	1	1	0	0	0	1
08:15 AM	1	0	1	0	2	2	0	0	0	3
08:30 AM	2	0	2	0	1	1	0	0	0	3
08:45 AM	3	0	3	0	2	2	0	0	0	5
Total	6	0	6	0	6	6	0	0	0	12
Grand Total	13	0	13	0	13	13	0	0	0	26
Apprch %	100	0		0	100		0	0		
Total %	50	0	50	0	50	50	0	0	0	

	Anderson Street Southbound			Anderson Street Northbound			Taylor Street Eastbound			
Start Time	Thru	Right	App. Total	Left	Thru	App. Total	Left	Right	App. Total	Int. Total
Peak Hour Analysis From 07:30 AM to 08:15 AM - Peak 1 of 1										
Peak Hour for Entire Intersection Begins at 07:30 AM										
07:30 AM	1	0	1	0	**2**	**2**	0	0	0	3
07:45 AM	**3**	0	**3**	0	2	2	0	0	0	**5**
08:00 AM	0	0	0	0	1	1	0	0	0	1
08:15 AM	1	0	1	0	2	2	0	0	0	3
Total Volume	5	0	5	0	7	7	0	0	0	12
% App. Total	100	0		0	100		0	0		
PHF	.417	.000	.417	.000	.875	.875	.000	.000	.000	.600

Counts Unlimited Inc.
PO Box 1178
Corona, CA 92878
(951) 268-6268

City of Loma Linda
N/S: Anderson Street
E/W: Taylor Street
Weather: Sunny

File Name : LMLANTAAM
Site Code : 00000092
Start Date : 10/12/2011
Page No : 2

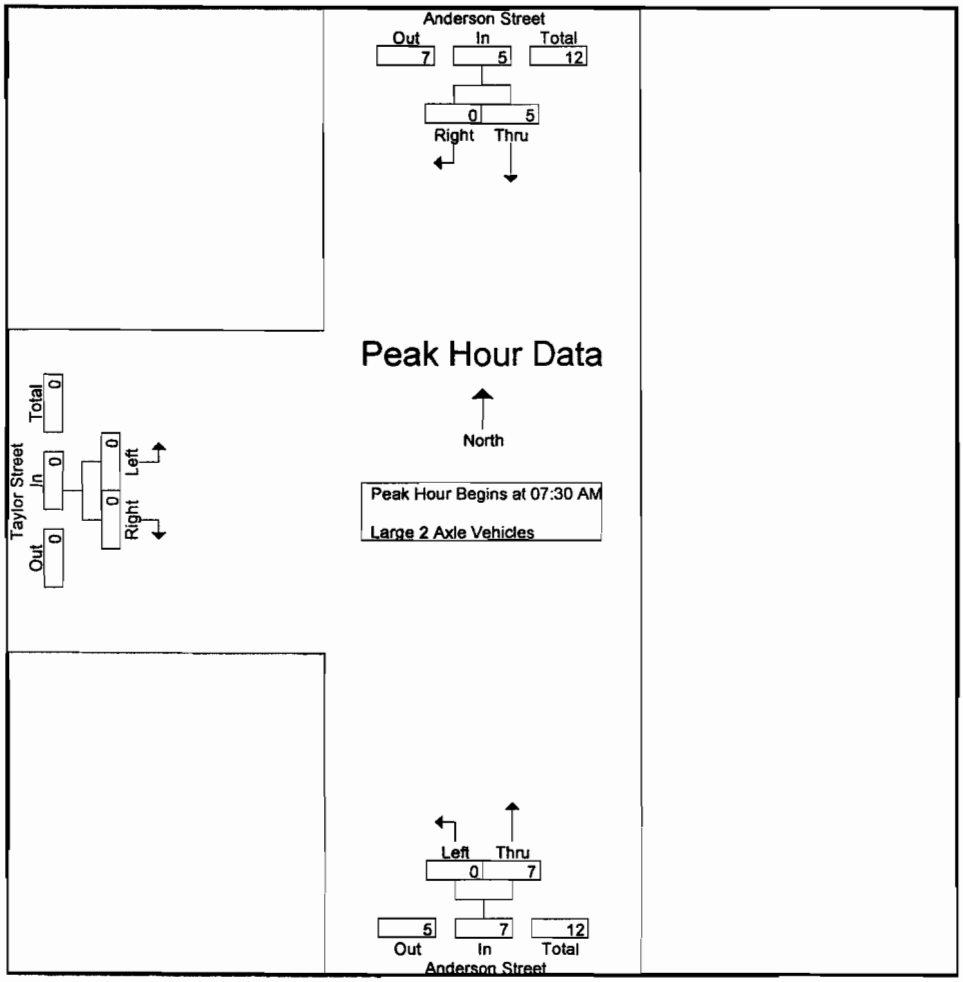

Peak Hour Analysis From 07:30 AM to 08:15 AM - Peak 1 of 1
Peak Hour for Each Approach Begins at:

	07:30 AM			07:30 AM			07:30 AM		
+0 mins.	1	0	1	0	2	2	0	0	0
+15 mins.	3	0	3	0	2	2	0	0	0
+30 mins.	0	0	0	0	1	1	0	0	0
+45 mins.	1	0	1	0	2	2	0	0	0
Total Volume	5	0	5	0	7	7	0	0	0
% App. Total	100	0		0	100		0	0	
PHF	.417	.000	.417	.000	.875	.875	.000	.000	.000

Counts Unlimited Inc.
PO Box 1178
Corona, CA 92878
(951) 268-6268

City of Loma Linda
N/S: Anderson Street
E/W: Taylor Street
Weather: Sunny

File Name : LMLANTAAM
Site Code : 00000092
Start Date : 10/12/2011
Page No : 1

Groups Printed- 3 Axle Vehicles

	Anderson Street Southbound			Anderson Street Northbound			Taylor Street Eastbound			
Start Time	Thru	Right	App. Total	Left	Thru	App. Total	Left	Right	App. Total	Int. Total
07:00 AM	0	0	0	0	0	0	0	0	0	0
07:15 AM	1	0	1	0	1	1	0	0	0	2
07:30 AM	0	0	0	0	0	0	0	0	0	0
07:45 AM	0	0	0	0	0	0	0	0	0	0
Total	1	0	1	0	1	1	0	0	0	2
08:00 AM	0	0	0	0	2	2	0	0	0	2
08:15 AM	0	0	0	0	0	0	0	0	0	0
08:30 AM	1	0	1	0	0	0	0	0	0	1
08:45 AM	1	0	1	0	0	0	0	0	0	1
Total	2	0	2	0	2	2	0	0	0	4
Grand Total	3	0	3	0	3	3	0	0	0	6
Apprch %	100	0		0	100		0	0		
Total %	50	0	50	0	50	50	0	0	0	

	Anderson Street Southbound			Anderson Street Northbound			Taylor Street Eastbound			
Start Time	Thru	Right	App. Total	Left	Thru	App. Total	Left	Right	App. Total	Int. Total
Peak Hour Analysis From 07:30 AM to 08:15 AM - Peak 1 of 1										
Peak Hour for Entire Intersection Begins at 07:30 AM										
07:30 AM	0	0	0	0	0	0	0	0	0	0
07:45 AM	0	0	0	0	0	0	0	0	0	0
08:00 AM	0	0	0	0	**2**	**2**	0	0	0	**2**
08:15 AM	0	0	0	0	0	0	0	0	0	0
Total Volume	0	0	0	0	2	2	0	0	0	2
% App. Total	0	0		0	100		0	0		
PHF	.000	.000	.000	.000	.250	.250	.000	.000	.000	.250

Counts Unlimited Inc.
PO Box 1178
Corona, CA 92878
(951) 268-6268

City of Loma Linda
N/S: Anderson Street
E/W: Taylor Street
Weather: Sunny

File Name : LMLANTAAM
Site Code : 00000092
Start Date : 10/12/2011
Page No : 2

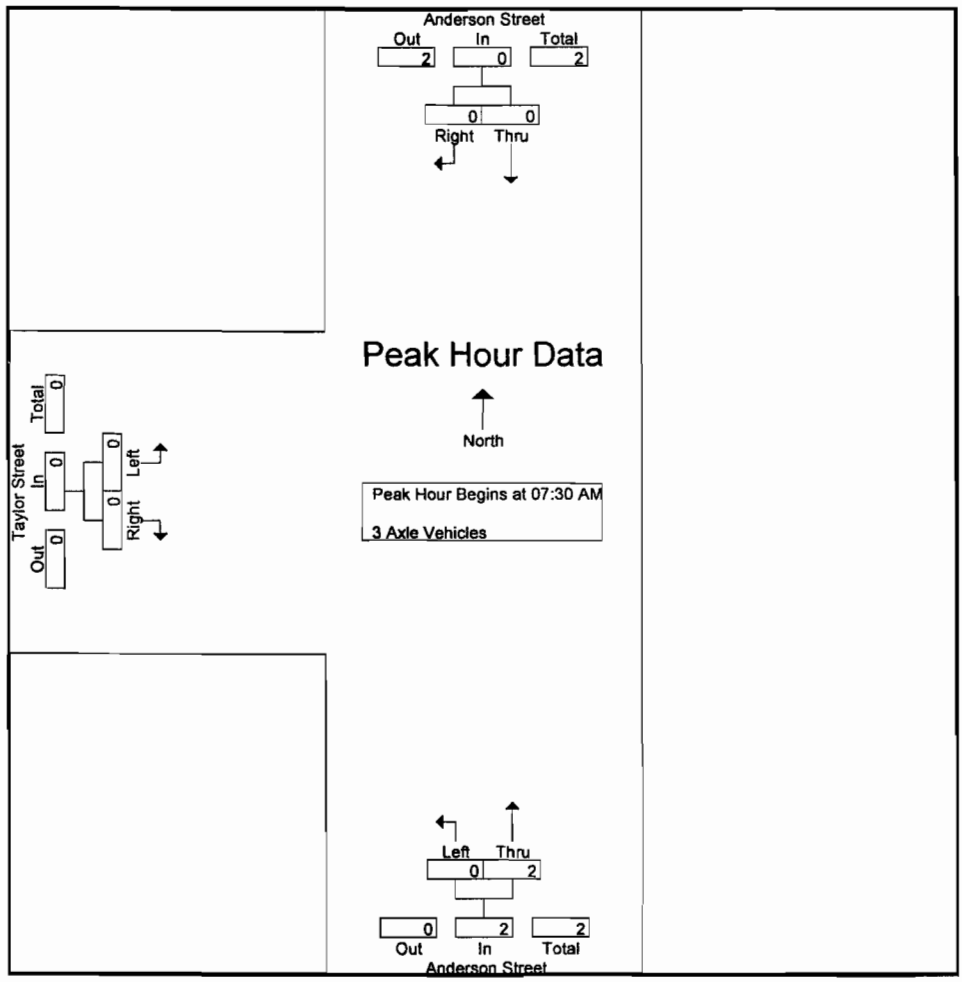

Peak Hour Analysis From 07:30 AM to 08:15 AM - Peak 1 of 1

Peak Hour for Each Approach Begins at:

	07:30 AM			07:30 AM			07:30 AM		
+0 mins.	0	0	0	0	0	0	0	0	0
+15 mins.	0	0	0	0	0	0	0	0	0
+30 mins.	0	0	0	0	**2**	**2**	0	0	0
+45 mins.	0	0	0	0	0	0	0	0	0
Total Volume	0	0	0	0	2	2	0	0	0
% App. Total	0	0		0	100		0	0	
PHF	.000	.000	.000	.000	.250	.250	.000	.000	.000

Counts Unlimited Inc.
PO Box 1178
Corona, CA 92878
(951) 268-6268

City of Loma Linda
N/S: Anderson Street
E/W: Taylor Street
Weather: Sunny

File Name : LMLANTAAM
Site Code : 00000092
Start Date : 10/12/2011
Page No : 1

Groups Printed- 4+ Axle Trucks

	Anderson Street Southbound			Anderson Street Northbound			Taylor Street Eastbound			
Start Time	Thru	Right	App. Total	Left	Thru	App. Total	Left	Right	App. Total	Int. Total
07:00 AM	0	0	0	0	0	0	0	0	0	0
07:15 AM	0	0	0	0	0	0	0	0	0	0
07:30 AM	0	0	0	0	0	0	0	0	0	0
07:45 AM	0	0	0	0	0	0	0	0	0	0
Total	0	0	0	0	0	0	0	0	0	0
08:00 AM	0	0	0	0	0	0	0	0	0	0
08:15 AM	0	0	0	0	0	0	0	0	0	0
08:30 AM	0	0	0	0	0	0	0	0	0	0
08:45 AM	0	0	0	0	0	0	0	0	0	0
Total	0	0	0	0	0	0	0	0	0	0
Grand Total	0	0	0	0	0	0	0	0	0	0
Apprch %	0	0		0	0		0	0		
Total %										

	Anderson Street Southbound			Anderson Street Northbound			Taylor Street Eastbound			
Start Time	Thru	Right	App. Total	Left	Thru	App. Total	Left	Right	App. Total	Int. Total
Peak Hour Analysis From 07:30 AM to 08:15 AM - Peak 1 of 1										
Peak Hour for Entire Intersection Begins at 07:30 AM										
07:30 AM	0	0	0	0	0	0	0	0	0	0
07:45 AM	0	0	0	0	0	0	0	0	0	0
08:00 AM	0	0	0	0	0	0	0	0	0	0
08:15 AM	0	0	0	0	0	0	0	0	0	0
Total Volume	0	0	0	0	0	0	0	0	0	0
% App. Total	0	0		0	0		0	0		
PHF	.000	.000	.000	.000	.000	.000	.000	.000	.000	.000

Counts Unlimited Inc.
PO Box 1178
Corona, CA 92878
(951) 268-6268

City of Loma Linda
N/S: Anderson Street
E/W: Taylor Street
Weather: Sunny

File Name : LMLANTAAM
Site Code : 00000092
Start Date : 10/12/2011
Page No : 2

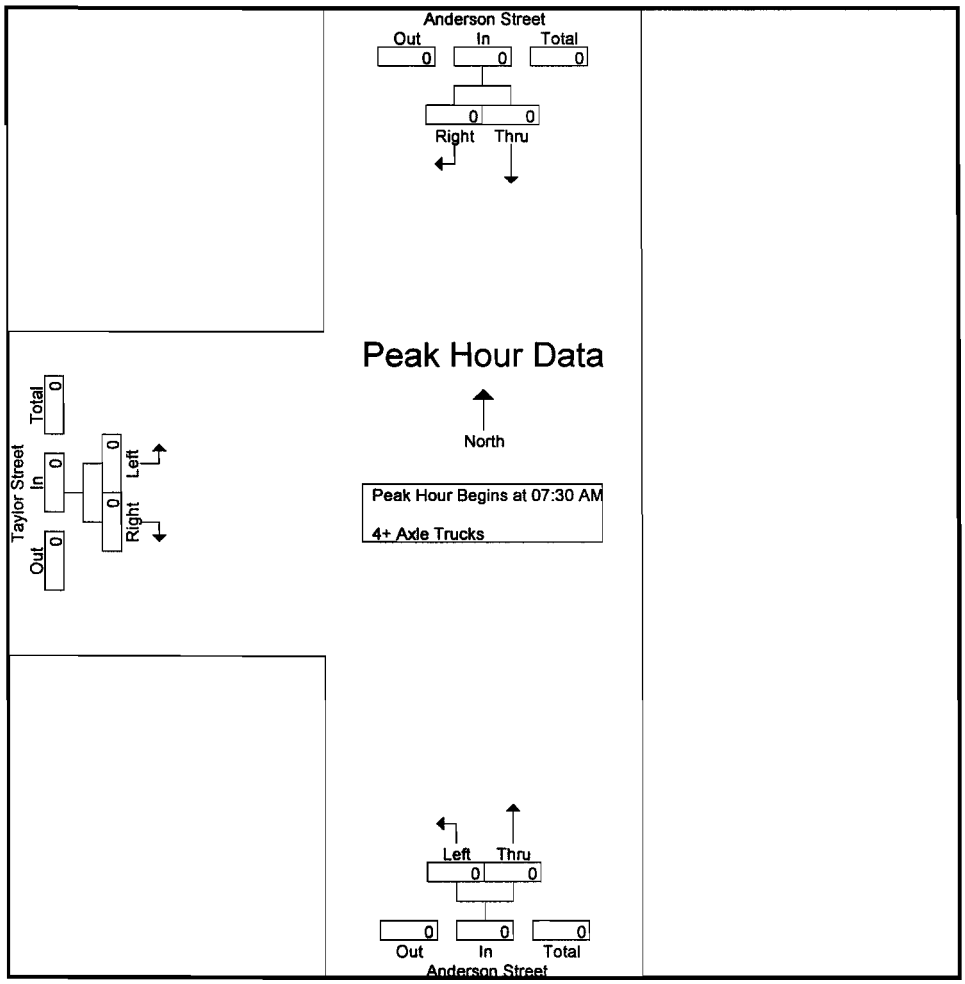

Peak Hour Analysis From 07:30 AM to 08:15 AM - Peak 1 of 1
Peak Hour for Each Approach Begins at:

	07:30 AM			07:30 AM			07:30 AM		
+0 mins.	0	0	0	0	0	0	0	0	0
+15 mins.	0	0	0	0	0	0	0	0	0
+30 mins.	0	0	0	0	0	0	0	0	0
+45 mins.	0	0	0	0	0	0	0	0	0
Total Volume	0	0	0	0	0	0	0	0	0
% App. Total	0	0		0	0		0	0	
PHF	.000	.000	.000	.000	.000	.000	.000	.000	.000

Counts Unlimited Inc.
PO Box 1178
Corona, CA 92878
(951) 268-6268

City of Loma Linda
N/S: Anderson Street
E/W: Taylor Street
Weather: Sunny

File Name : LMLANTAPM
Site Code : 00000092
Start Date : 10/12/2011
Page No : 1

Groups Printed- Passenger Vehicles - Large 2 Axle Vehicles - 3 Axle Vehicles - 4+ Axle Trucks

	Anderson Street Southbound			Anderson Street Northbound			Taylor Street Eastbound			
Start Time	Thru	Right	App. Total	Left	Thru	App. Total	Left	Right	App. Total	Int. Total
04:00 PM	99	2	101	2	131	133	0	0	0	234
04:15 PM	81	2	83	8	161	169	0	1	1	253
04:30 PM	119	1	120	2	145	147	0	0	0	267
04:45 PM	107	0	107	5	155	160	0	0	0	267
Total	406	5	411	17	592	609	0	1	1	1021
05:00 PM	114	2	116	3	164	167	0	0	0	283
05:15 PM	128	2	130	5	129	134	0	0	0	264
05:30 PM	100	2	102	5	114	119	0	0	0	221
05:45 PM	110	0	110	10	135	145	0	0	0	255
Total	452	6	458	23	542	565	0	0	0	1023
Grand Total	858	11	869	40	1134	1174	0	1	1	2044
Apprch %	98.7	1.3		3.4	96.6		0	100		
Total %	42	0.5	42.5	2	55.5	57.4	0	0	0	
Passenger Vehicles	848	11	859	40	1124	1164	0	1	1	2024
% Passenger Vehicles	98.8	100	98.8	100	99.1	99.1	0	100	100	99
Large 2 Axle Vehicles	8	0	8	0	10	10	0	0	0	18
% Large 2 Axle Vehicles	0.9	0	0.9	0	0.9	0.9	0	0	0	0.9
3 Axle Vehicles	1	0	1	0	0	0	0	0	0	1
% 3 Axle Vehicles	0.1	0	0.1	0	0	0	0	0	0	0
4+ Axle Trucks	1	0	1	0	0	0	0	0	0	1
% 4+ Axle Trucks	0.1	0	0.1	0	0	0	0	0	0	0

	Anderson Street Southbound			Anderson Street Northbound			Taylor Street Eastbound			
Start Time	Thru	Right	App. Total	Left	Thru	App. Total	Left	Right	App. Total	Int. Total
Peak Hour Analysis From 04:00 PM to 05:45 PM - Peak 1 of 1										
Peak Hour for Entire Intersection Begins at 04:30 PM										
04:30 PM	119	1	120	2	145	147	0	0	0	267
04:45 PM	107	0	107	5	155	160	0	0	0	267
05:00 PM	114	2	116	3	164	167	0	0	0	283
05:15 PM	128	2	130	5	129	134	0	0	0	264
Total Volume	468	5	473	15	593	608	0	0	0	1081
% App. Total	98.9	1.1		2.5	97.5		0	0		
PHF	.914	.625	.910	.750	.904	.910	.000	.000	.000	.955

Counts Unlimited Inc.
PO Box 1178
Corona, CA 92878
(951) 268-6268

City of Loma Linda
N/S: Anderson Street
E/W: Taylor Street
Weather: Sunny

File Name : LMLANTAPM
Site Code : 00000092
Start Date : 10/12/2011
Page No : 2

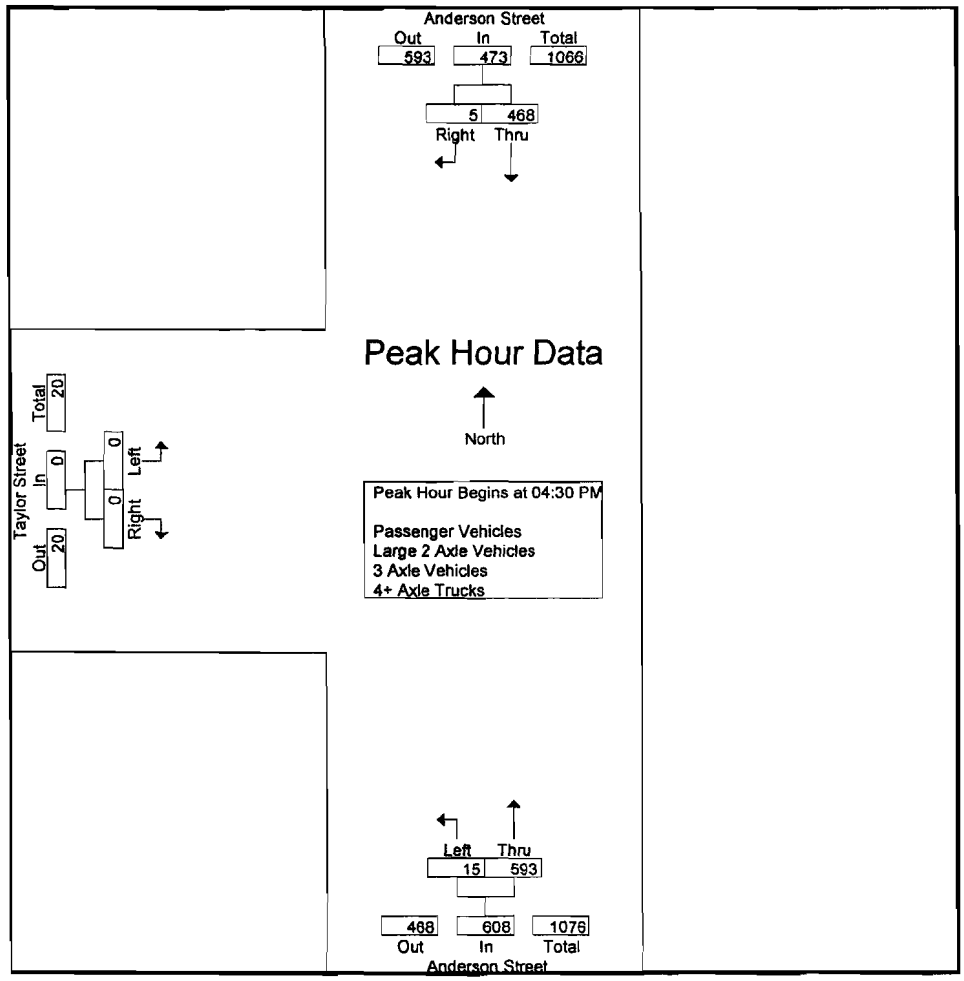

Peak Hour Analysis From 04:00 PM to 05:45 PM - Peak 1 of 1
Peak Hour for Each Approach Begins at:

	04:30 PM			04:15 PM			04:00 PM		
+0 mins.	119	1	120	8	161	169	0	0	0
+15 mins.	107	0	107	2	145	147	0	1	1
+30 mins.	114	2	116	5	155	160	0	0	0
+45 mins.	128	2	130	3	164	167	0	0	0
Total Volume	468	5	473	18	625	643	0	1	1
% App. Total	98.9	1.1		2.8	97.2		0	100	
PHF	.914	.625	.910	.563	.953	.951	.000	.250	.250

Counts Unlimited Inc.
PO Box 1178
Corona, CA 92878
(951) 268-6268

City of Loma Linda
N/S: Anderson Street
E/W: Taylor Street
Weather: Sunny

File Name : LMLANTAPM
Site Code : 00000092
Start Date : 10/12/2011
Page No : 1

Groups Printed- Passenger Vehicles

	Anderson Street Southbound			Anderson Street Northbound			Taylor Street Eastbound			
Start Time	Thru	Right	App. Total	Left	Thru	App. Total	Left	Right	App. Total	Int. Total
04:00 PM	98	2	100	2	127	129	0	0	0	229
04:15 PM	81	2	83	8	161	169	0	1	1	253
04:30 PM	116	1	117	2	144	146	0	0	0	263
04:45 PM	106	0	106	5	154	159	0	0	0	265
Total	401	5	406	17	586	603	0	1	1	1010
05:00 PM	113	2	115	3	162	165	0	0	0	280
05:15 PM	126	2	128	5	129	134	0	0	0	262
05:30 PM	99	2	101	5	112	117	0	0	0	218
05:45 PM	109	0	109	10	135	145	0	0	0	254
Total	447	6	453	23	538	561	0	0	0	1014
Grand Total	848	11	859	40	1124	1164	0	1	1	2024
Apprch %	98.7	1.3		3.4	96.6		0	100		
Total %	41.9	0.5	42.4	2	55.5	57.5	0	0	0	

	Anderson Street Southbound			Anderson Street Northbound			Taylor Street Eastbound			
Start Time	Thru	Right	App. Total	Left	Thru	App. Total	Left	Right	App. Total	Int. Total
Peak Hour Analysis From 04:30 PM to 05:15 PM - Peak 1 of 1										
Peak Hour for Entire Intersection Begins at 04:30 PM										
04:30 PM	116	1	117	2	144	146	0	0	0	263
04:45 PM	106	0	106	**5**	154	159	0	0	0	265
05:00 PM	113	**2**	115	3	**162**	**165**	0	0	0	**280**
05:15 PM	**126**	2	**128**	5	129	134	0	0	0	262
Total Volume	461	5	466	15	589	604	0	0	0	1070
% App. Total	98.9	1.1		2.5	97.5		0	0		
PHF	.915	.625	.910	.750	.909	.915	.000	.000	.000	.955

Counts Unlimited Inc.
PO Box 1178
Corona, CA 92878
(951) 268-6268

City of Loma Linda
N/S: Anderson Street
E/W: Taylor Street
Weather: Sunny

File Name : LMLANTAPM
Site Code : 00000092
Start Date : 10/12/2011
Page No : 2

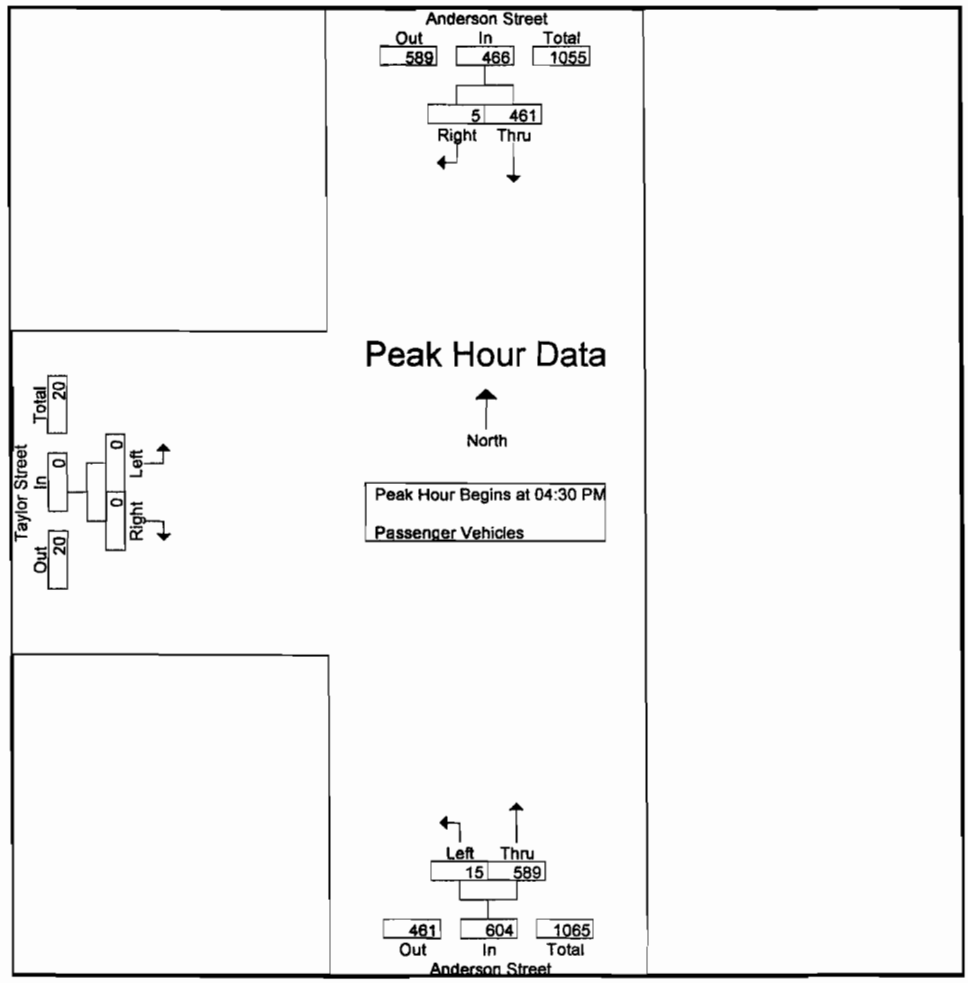

Peak Hour Analysis From 04:30 PM to 05:15 PM - Peak 1 of 1
Peak Hour for Each Approach Begins at:

	04:30 PM			04:30 PM			04:30 PM		
+0 mins.	116	1	117	2	144	146	0	0	0
+15 mins.	106	0	106	**5**	154	159	0	0	0
+30 mins.	113	**2**	115	3	**162**	**165**	0	0	0
+45 mins.	**126**	2	**128**	5	129	134	0	0	0
Total Volume	461	5	466	15	589	604	0	0	0
% App. Total	98.9	1.1		2.5	97.5		0	0	
PHF	.915	.625	.910	.750	.909	.915	.000	.000	.000

Counts Unlimited Inc.
PO Box 1178
Corona, CA 92878
(951) 268-6268

City of Loma Linda
N/S: Anderson Street
E/W: Taylor Street
Weather: Sunny

File Name : LMLANTAPM
Site Code : 00000092
Start Date : 10/12/2011
Page No : 1

Groups Printed- Large 2 Axle Vehicles

	Anderson Street Southbound			Anderson Street Northbound			Taylor Street Eastbound			
Start Time	Thru	Right	App. Total	Left	Thru	App. Total	Left	Right	App. Total	Int. Total
04:00 PM	1	0	1	0	4	4	0	0	0	5
04:15 PM	0	0	0	0	0	0	0	0	0	0
04:30 PM	2	0	2	0	1	1	0	0	0	3
04:45 PM	1	0	1	0	1	1	0	0	0	2
Total	4	0	4	0	6	6	0	0	0	10
05:00 PM	0	0	0	0	2	2	0	0	0	2
05:15 PM	2	0	2	0	0	0	0	0	0	2
05:30 PM	1	0	1	0	2	2	0	0	0	3
05:45 PM	1	0	1	0	0	0	0	0	0	1
Total	4	0	4	0	4	4	0	0	0	8
Grand Total	8	0	8	0	10	10	0	0	0	18
Apprch %	100	0		0	100		0	0		
Total %	44.4	0	44.4	0	55.6	55.6	0	0	0	

	Anderson Street Southbound			Anderson Street Northbound			Taylor Street Eastbound			
Start Time	Thru	Right	App. Total	Left	Thru	App. Total	Left	Right	App. Total	Int. Total
Peak Hour Analysis From 04:30 PM to 05:15 PM - Peak 1 of 1										
Peak Hour for Entire Intersection Begins at 04:30 PM										
04:30 PM	**2**	0	**2**	0	1	1	0	0	0	**3**
04:45 PM	1	0	1	0	1	1	0	0	0	2
05:00 PM	0	0	0	0	**2**	**2**	0	0	0	2
05:15 PM	2	0	2	0	0	0	0	0	0	2
Total Volume	5	0	5	0	4	4	0	0	0	9
% App. Total	100	0		0	100		0	0		
PHF	.625	.000	.625	.000	.500	.500	.000	.000	.000	.750

Counts Unlimited Inc.
PO Box 1178
Corona, CA 92878
(951) 268-6268

City of Loma Linda
N/S: Anderson Street
E/W: Taylor Street
Weather: Sunny

File Name : LMLANTAPM
Site Code : 00000092
Start Date : 10/12/2011
Page No : 2

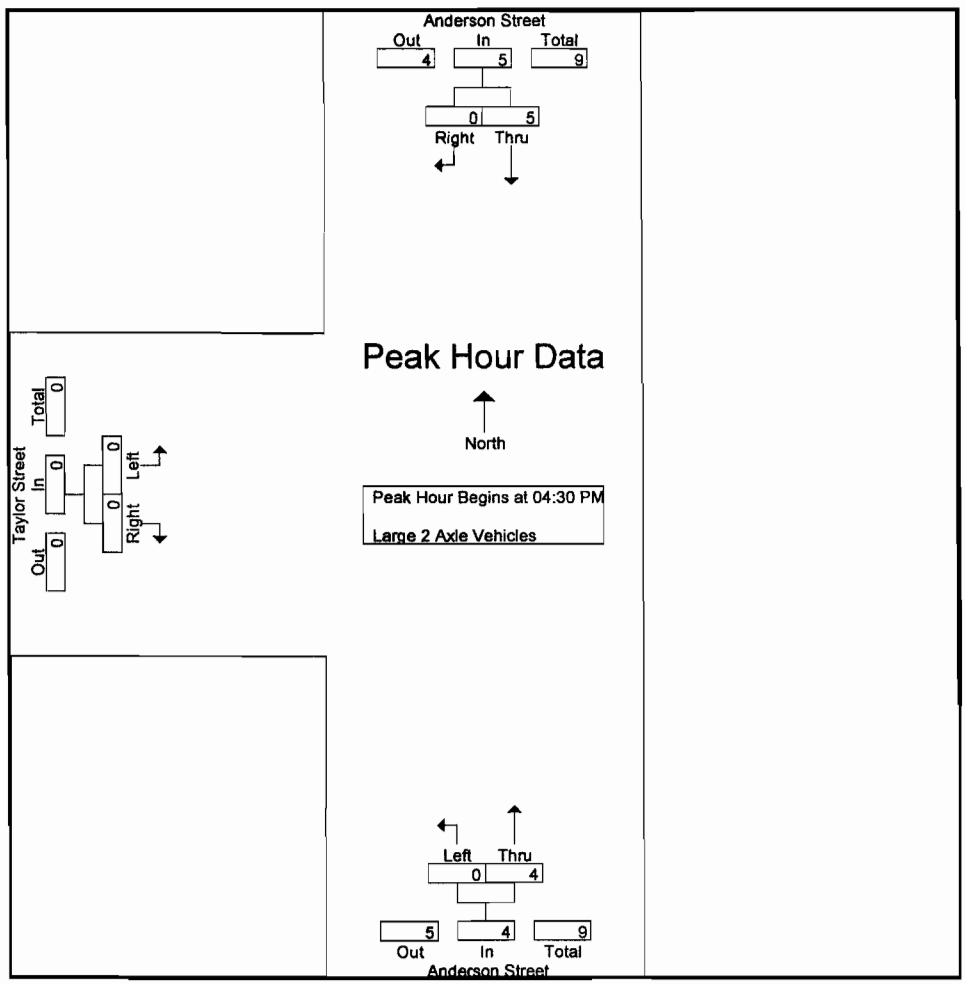

Peak Hour Analysis From 04:30 PM to 05:15 PM - Peak 1 of 1
Peak Hour for Each Approach Begins at:

	04:30 PM			04:30 PM			04:30 PM		
+0 mins.	**2**	0	**2**	0	1	1	0	0	0
+15 mins.	1	0	1	0	1	1	0	0	0
+30 mins.	0	0	0	0	**2**	**2**	0	0	0
+45 mins.	2	0	2	0	0	0	0	0	0
Total Volume	5	0	5	0	4	4	0	0	0
% App. Total	100	0		0	100		0	0	
PHF	.625	.000	.625	.000	.500	.500	.000	.000	.000

Counts Unlimited Inc.
PO Box 1178
Corona, CA 92878
(951) 268-6268

City of Loma Linda
N/S: Anderson Street
E/W: Taylor Street
Weather: Sunny

File Name : LMLANTAPM
Site Code : 00000092
Start Date : 10/12/2011
Page No : 1

Groups Printed- 3 Axle Vehicles

	Anderson Street Southbound			Anderson Street Northbound			Taylor Street Eastbound			
Start Time	Thru	Right	App. Total	Left	Thru	App. Total	Left	Right	App. Total	Int. Total
04:00 PM	0	0	0	0	0	0	0	0	0	0
04:15 PM	0	0	0	0	0	0	0	0	0	0
04:30 PM	0	0	0	0	0	0	0	0	0	0
04:45 PM	0	0	0	0	0	0	0	0	0	0
Total	0	0	0	0	0	0	0	0	0	0
05:00 PM	1	0	1	0	0	0	0	0	0	1
05:15 PM	0	0	0	0	0	0	0	0	0	0
05:30 PM	0	0	0	0	0	0	0	0	0	0
05:45 PM	0	0	0	0	0	0	0	0	0	0
Total	1	0	1	0	0	0	0	0	0	1
Grand Total	1	0	1	0	0	0	0	0	0	1
Apprch %	100	0		0	0		0	0		
Total %	100	0	100	0	0	0	0	0	0	

	Anderson Street Southbound			Anderson Street Northbound			Taylor Street Eastbound			
Start Time	Thru	Right	App. Total	Left	Thru	App. Total	Left	Right	App. Total	Int. Total
Peak Hour Analysis From 04:30 PM to 05:15 PM - Peak 1 of 1										
Peak Hour for Entire Intersection Begins at 04:30 PM										
04:30 PM	0	0	0	0	0	0	0	0	0	0
04:45 PM	0	0	0	0	0	0	0	0	0	0
05:00 PM	1	0	1	0	0	0	0	0	0	1
05:15 PM	0	0	0	0	0	0	0	0	0	0
Total Volume	1	0	1	0	0	0	0	0	0	1
% App. Total	100	0		0	0		0	0		
PHF	.250	.000	.250	.000	.000	.000	.000	.000	.000	.250

Counts Unlimited Inc.
PO Box 1178
Corona, CA 92878
(951) 268-6268

City of Loma Linda
N/S: Anderson Street
E/W: Taylor Street
Weather: Sunny

File Name : LMLANTAPM
Site Code : 00000092
Start Date : 10/12/2011
Page No : 2

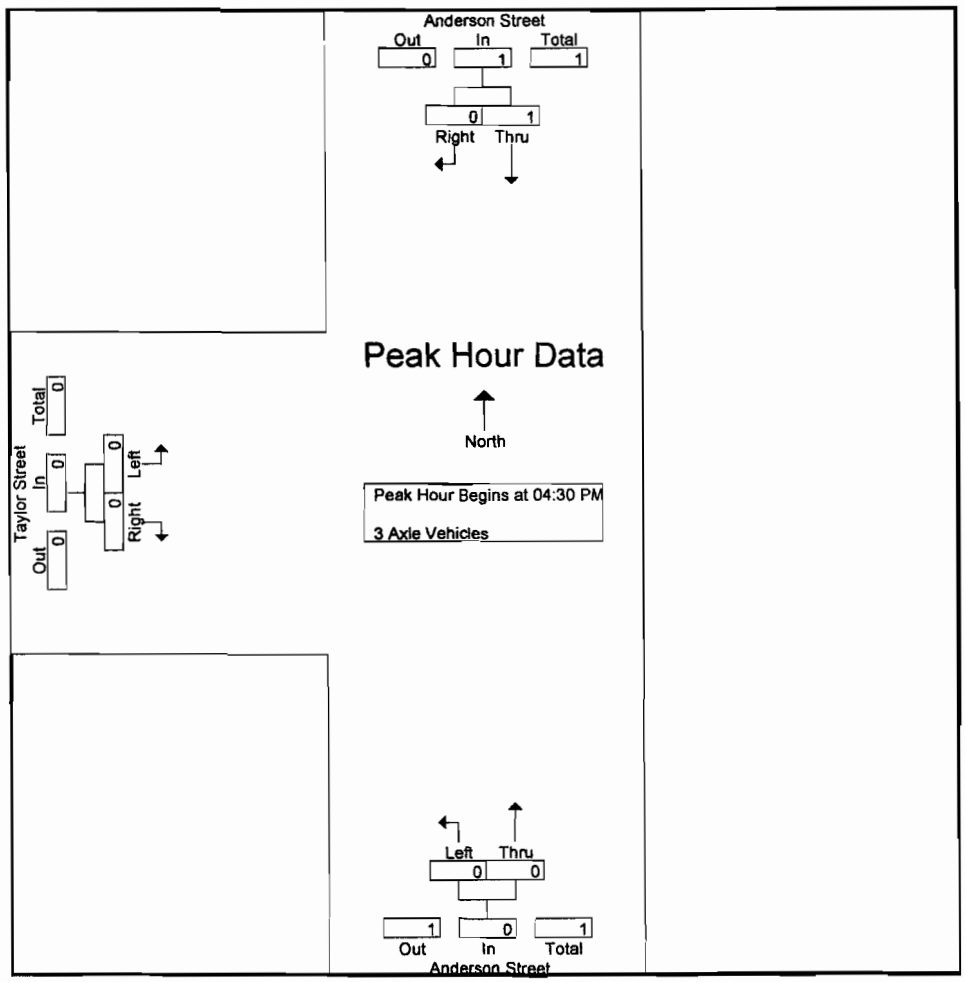

Peak Hour Analysis From 04:30 PM to 05:15 PM - Peak 1 of 1
Peak Hour for Each Approach Begins at:

	04:30 PM			04:30 PM			04:30 PM		
+0 mins.	0	0	0	0	0	0	0	0	0
+15 mins.	0	0	0	0	0	0	0	0	0
+30 mins.	1	0	1	0	0	0	0	0	0
+45 mins.	0	0	0	0	0	0	0	0	0
Total Volume	1	0	1	0	0	0	0	0	0
% App. Total	100	0		0	0		0	0	
PHF	.250	.000	.250	.000	.000	.000	.000	.000	.000

Counts Unlimited Inc.
PO Box 1178
Corona, CA 92878
(951) 268-6268

City of Loma Linda
N/S: Anderson Street
E/W: Taylor Street
Weather: Sunny

File Name : LMLANTAPM
Site Code : 00000092
Start Date : 10/12/2011
Page No : 1

Groups Printed- 4+ Axle Trucks

	Anderson Street Southbound			Anderson Street Northbound			Taylor Street Eastbound			
Start Time	Thru	Right	App. Total	Left	Thru	App. Total	Left	Right	App. Total	Int. Total
04:00 PM	0	0	0	0	0	0	0	0	0	0
04:15 PM	0	0	0	0	0	0	0	0	0	0
04:30 PM	1	0	1	0	0	0	0	0	0	1
04:45 PM	0	0	0	0	0	0	0	0	0	0
Total	1	0	1	0	0	0	0	0	0	1
05:00 PM	0	0	0	0	0	0	0	0	0	0
05:15 PM	0	0	0	0	0	0	0	0	0	0
05:30 PM	0	0	0	0	0	0	0	0	0	0
05:45 PM	0	0	0	0	0	0	0	0	0	0
Total	0	0	0	0	0	0	0	0	0	0
Grand Total	1	0	1	0	0	0	0	0	0	1
Apprch %	100	0		0	0		0	0		
Total %	100	0	100	0	0	0	0	0	0	

	Anderson Street Southbound			Anderson Street Northbound			Taylor Street Eastbound			
Start Time	Thru	Right	App. Total	Left	Thru	App. Total	Left	Right	App. Total	Int. Total
Peak Hour Analysis From 04:30 PM to 05:15 PM - Peak 1 of 1										
Peak Hour for Entire Intersection Begins at 04:30 PM										
04:30 PM	1	0	1	0	0	0	0	0	0	1
04:45 PM	0	0	0	0	0	0	0	0	0	0
05:00 PM	0	0	0	0	0	0	0	0	0	0
05:15 PM	0	0	0	0	0	0	0	0	0	0
Total Volume	1	0	1	0	0	0	0	0	0	1
% App. Total	100	0		0	0		0	0		
PHF	.250	.000	.250	.000	.000	.000	.000	.000	.000	.250

Counts Unlimited Inc.
PO Box 1178
Corona, CA 92878
(951) 268-6268

City of Loma Linda
N/S: Anderson Street
E/W: Taylor Street
Weather: Sunny

File Name : LMLANTAPM
Site Code : 00000092
Start Date : 10/12/2011
Page No : 2

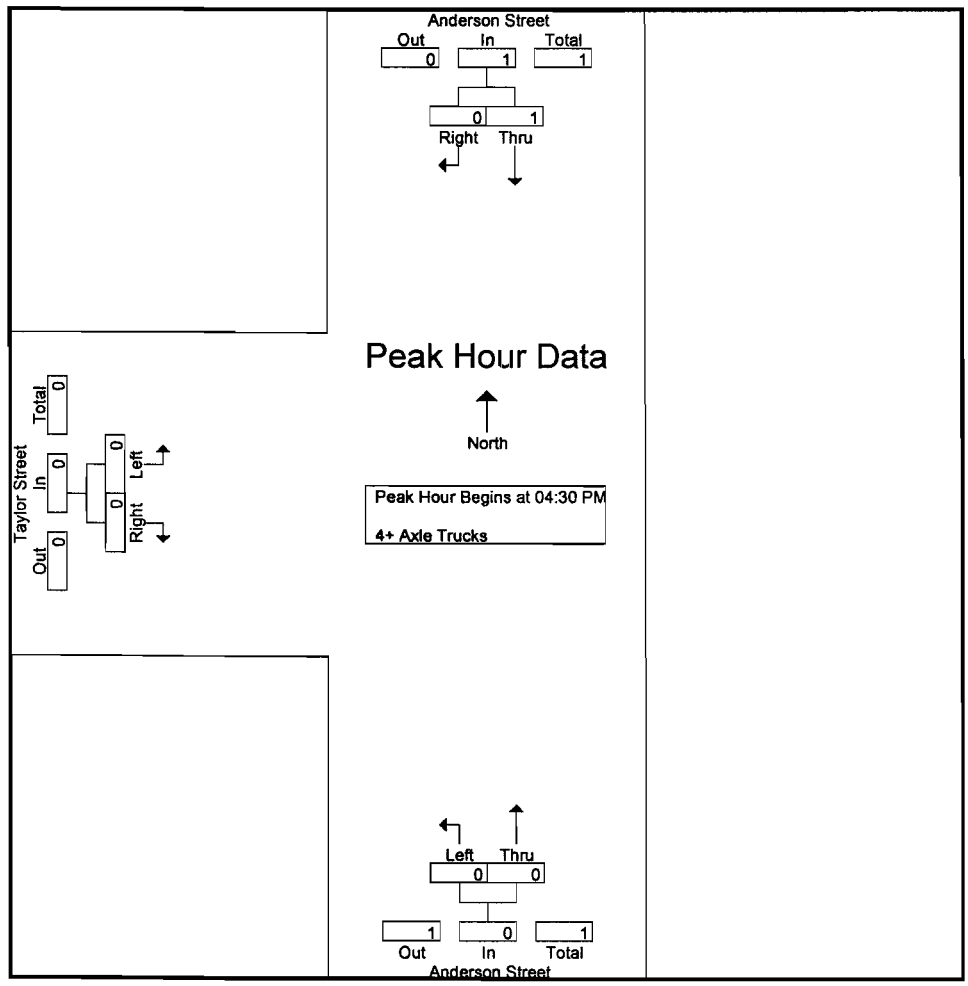

Peak Hour Analysis From 04:30 PM to 05:15 PM - Peak 1 of 1
Peak Hour for Each Approach Begins at:

	04:30 PM			04:30 PM			04:30 PM		
+0 mins.	1	0	1	0	0	0	0	0	0
+15 mins.	0	0	0	0	0	0	0	0	0
+30 mins.	0	0	0	0	0	0	0	0	0
+45 mins.	0	0	0	0	0	0	0	0	0
Total Volume	1	0	1	0	0	0	0	0	0
% App. Total	100	0		0	0		0	0	
PHF	.250	.000	.250	.000	.000	.000	.000	.000	.000

Counts Unlimited Inc.
PO Box 1178
Corona, CA 92878
(951) 268-6268

City of Loma Linda
N/S: Anderson Street
E/W: Prospect Avenue
Weather: Sunny

File Name : LMLANPRAM
Site Code : 00000001
Start Date : 10/12/2011
Page No : 1

Groups Printed- Passenger Vehicles - Large 2 Axle Vehicles - 3 Axle Vehicles - 4+ Axle Trucks

	Anderson Street Southbound				Prospect Avenue Westbound				Anderson Street Northbound				Prospect Avenue Eastbound				
Start Time	Left	Thru	Right	App. Total	Left	Thru	Right	App. Total	Left	Thru	Right	App. Total	Left	Thru	Right	App. Total	Int. Total
07:00 AM	15	55	0	70	4	0	9	13	0	64	12	76	10	3	8	21	180
07:15 AM	26	54	0	80	4	0	10	14	0	76	10	86	27	4	14	45	225
07:30 AM	18	69	0	87	6	0	19	25	0	128	18	146	22	4	18	44	302
07:45 AM	15	109	0	124	7	0	16	23	0	157	21	178	14	3	11	28	353
Total	74	287	0	361	21	0	54	75	0	425	61	486	73	14	51	138	1060
08:00 AM	21	109	0	130	10	0	17	27	0	85	15	100	8	5	11	24	281
08:15 AM	15	101	0	116	7	0	9	16	0	91	10	101	9	4	15	28	261
08:30 AM	11	85	0	96	14	0	16	30	0	73	17	90	7	9	11	27	243
08:45 AM	8	85	0	93	11	0	22	33	0	79	8	87	13	5	16	34	247
Total	55	380	0	435	42	0	64	106	0	328	50	378	37	23	53	113	1032
Grand Total	129	667	0	796	63	0	118	181	0	753	111	864	110	37	104	251	2092
Apprch %	16.2	83.8	0		34.8	0	65.2		0	87.2	12.8		43.8	14.7	41.4		
Total %	6.2	31.9	0	38	3	0	5.6	8.7	0	36	5.3	41.3	5.3	1.8	5	12	
Passenger Vehicles	116	607	0	723	53	0	98	151	0	715	104	819	96	25	97	218	1911
% Passenger Vehicles	89.9	91	0	90.8	84.1	0	83.1	83.4	0	95	93.7	94.8	87.3	67.6	93.3	86.9	91.3
Large 2 Axle Vehicles	13	58	0	71	9	0	20	29	0	36	7	43	13	12	7	32	175
% Large 2 Axle Vehicles	10.1	8.7	0	8.9	14.3	0	16.9	16	0	4.8	6.3	5	11.8	32.4	6.7	12.7	8.4
3 Axle Vehicles	0	2	0	2	1	0	0	1	0	2	0	2	1	0	0	1	6
% 3 Axle Vehicles	0	0.3	0	0.3	1.6	0	0	0.6	0	0.3	0	0.2	0.9	0	0	0.4	0.3
4+ Axle Trucks	0	0	0	0	0	0	0	0	0	0	0	0	0	0	0	0	0
% 4+ Axle Trucks	0	0	0	0	0	0	0	0	0	0	0	0	0	0	0	0	0

	Anderson Street Southbound				Prospect Avenue Westbound				Anderson Street Northbound				Prospect Avenue Eastbound				
Start Time	Left	Thru	Right	App. Total	Left	Thru	Right	App. Total	Left	Thru	Right	App. Total	Left	Thru	Right	App. Total	Int. Total
Peak Hour Analysis From 07:00 AM to 08:45 AM - Peak 1 of 1																	
Peak Hour for Entire Intersection Begins at 07:30 AM																	
07:30 AM	18	69	0	87	6	0	**19**	25	0	128	18	146	**22**	4	**18**	**44**	302
07:45 AM	15	**109**	0	124	7	0	16	23	0	**157**	**21**	**178**	14	3	11	28	**353**
08:00 AM	**21**	109	0	**130**	**10**	0	17	**27**	0	85	15	100	8	**5**	11	24	281
08:15 AM	15	101	0	116	7	0	9	16	0	91	10	101	9	4	15	28	261
Total Volume	69	388	0	457	30	0	61	91	0	461	64	525	53	16	55	124	1197
% App. Total	15.1	84.9	0		33	0	67		0	87.8	12.2		42.7	12.9	44.4		
PHF	.821	.890	.000	.879	.750	.000	.803	.843	.000	.734	.762	.737	.602	.800	.764	.705	.848

Counts Unlimited Inc.
PO Box 1178
Corona, CA 92878
(951) 268-6268

City of Loma Linda
N/S: Anderson Street
E/W: Prospect Avenue
Weather: Sunny

File Name : LMLANPRAM
Site Code : 00000001
Start Date : 10/12/2011
Page No : 2

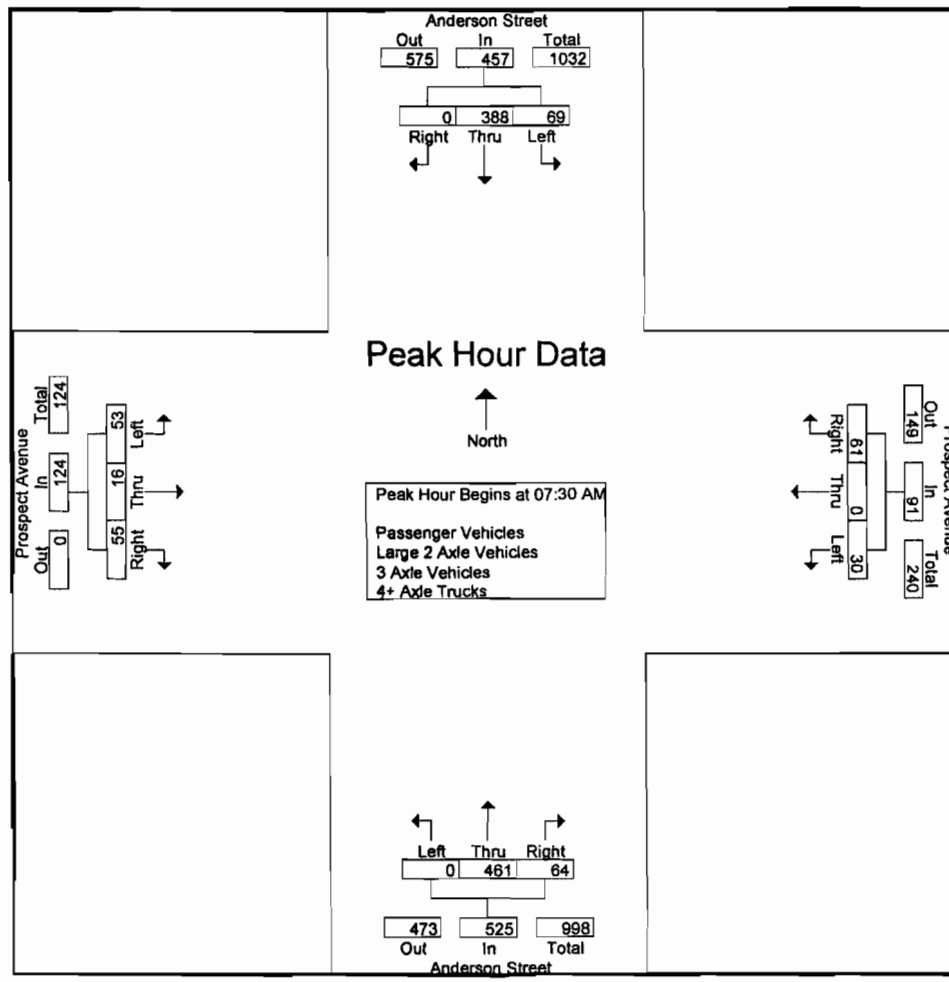

Peak Hour Analysis From 07:00 AM to 08:45 AM - Peak 1 of 1

Peak Hour for Each Approach Begins at:

	07:45 AM				08:00 AM				07:30 AM				07:15 AM			
+0 mins.	15	**109**	0	124	10	0	17	27	0	128	18	146	**27**	4	14	**45**
+15 mins.	**21**	109	0	**130**	7	0	9	16	0	**157**	**21**	**178**	22	4	**18**	44
+30 mins.	15	101	0	116	**14**	0	16	30	0	85	15	100	14	3	11	28
+45 mins.	11	85	0	96	11	0	**22**	**33**	0	91	10	101	8	**5**	11	24
Total Volume	62	404	0	466	42	0	64	106	0	461	64	525	71	16	54	141
% App. Total	13.3	86.7	0		39.6	0	60.4		0	87.8	12.2		50.4	11.3	38.3	
PHF	.738	.927	.000	.896	.750	.000	.727	.803	.000	.734	.762	.737	.657	.800	.750	.783

Counts Unlimited Inc.
PO Box 1178
Corona, CA 92878
(951) 268-6268

City of Loma Linda
N/S: Anderson Street
E/W: Prospect Avenue
Weather: Sunny

File Name : LMLANPRAM
Site Code : 00000001
Start Date : 10/12/2011
Page No : 1

Groups Printed- Passenger Vehicles

	Anderson Street Southbound				Prospect Avenue Westbound				Anderson Street Northbound				Prospect Avenue Eastbound				
Start Time	Left	Thru	Right	App. Total	Left	Thru	Right	App. Total	Left	Thru	Right	App. Total	Left	Thru	Right	App. Total	Int. Total
07:00 AM	12	46	0	58	4	0	7	11	0	60	11	71	9	1	8	18	158
07:15 AM	24	50	0	74	3	0	8	11	0	74	10	84	24	3	12	39	208
07:30 AM	16	65	0	81	4	0	17	21	0	122	16	138	21	3	17	41	281
07:45 AM	14	101	0	115	7	0	14	21	0	153	20	173	13	3	11	27	336
Total	66	262	0	328	18	0	46	64	0	409	57	466	67	10	48	125	983
08:00 AM	18	104	0	122	8	0	14	22	0	80	15	95	8	4	11	23	262
08:15 AM	14	92	0	106	7	0	7	14	0	88	9	97	7	2	15	24	241
08:30 AM	10	75	0	85	11	0	13	24	0	65	16	81	5	7	10	22	212
08:45 AM	8	74	0	82	9	0	18	27	0	73	7	80	9	2	13	24	213
Total	50	345	0	395	35	0	52	87	0	306	47	353	29	15	49	93	928
Grand Total	116	607	0	723	53	0	98	151	0	715	104	819	96	25	97	218	1911
Apprch %	16	84	0		35.1	0	64.9		0	87.3	12.7		44	11.5	44.5		
Total %	6.1	31.8	0	37.8	2.8	0	5.1	7.9	0	37.4	5.4	42.9	5	1.3	5.1	11.4	

	Anderson Street Southbound				Prospect Avenue Westbound				Anderson Street Northbound				Prospect Avenue Eastbound				
Start Time	Left	Thru	Right	App. Total	Left	Thru	Right	App. Total	Left	Thru	Right	App. Total	Left	Thru	Right	App. Total	Int. Total
Peak Hour Analysis From 07:30 AM to 08:15 AM - Peak 1 of 1																	
Peak Hour for Entire Intersection Begins at 07:30 AM																	
07:30 AM	16	65	0	81	4	0	**17**	21	0	122	16	138	**21**	3	**17**	**41**	281
07:45 AM	14	101	0	115	7	0	14	21	0	**153**	**20**	**173**	13	3	11	27	**336**
08:00 AM	**18**	**104**	0	**122**	**8**	0	14	**22**	0	80	15	95	8	**4**	11	23	262
08:15 AM	14	92	0	106	7	0	7	14	0	88	9	97	7	2	15	24	241
Total Volume	62	362	0	424	26	0	52	78	0	443	60	503	49	12	54	115	1120
% App. Total	14.6	85.4	0		33.3	0	66.7		0	88.1	11.9		42.6	10.4	47		
PHF	.861	.870	.000	.869	.813	.000	.765	.886	.000	.724	.750	.727	.583	.750	.794	.701	.833

Counts Unlimited Inc.
PO Box 1178
Corona, CA 92878
(951) 268-6268

City of Loma Linda
N/S: Anderson Street
E/W: Prospect Avenue
Weather: Sunny

File Name : LMLANPRAM
Site Code : 00000001
Start Date : 10/12/2011
Page No : 2

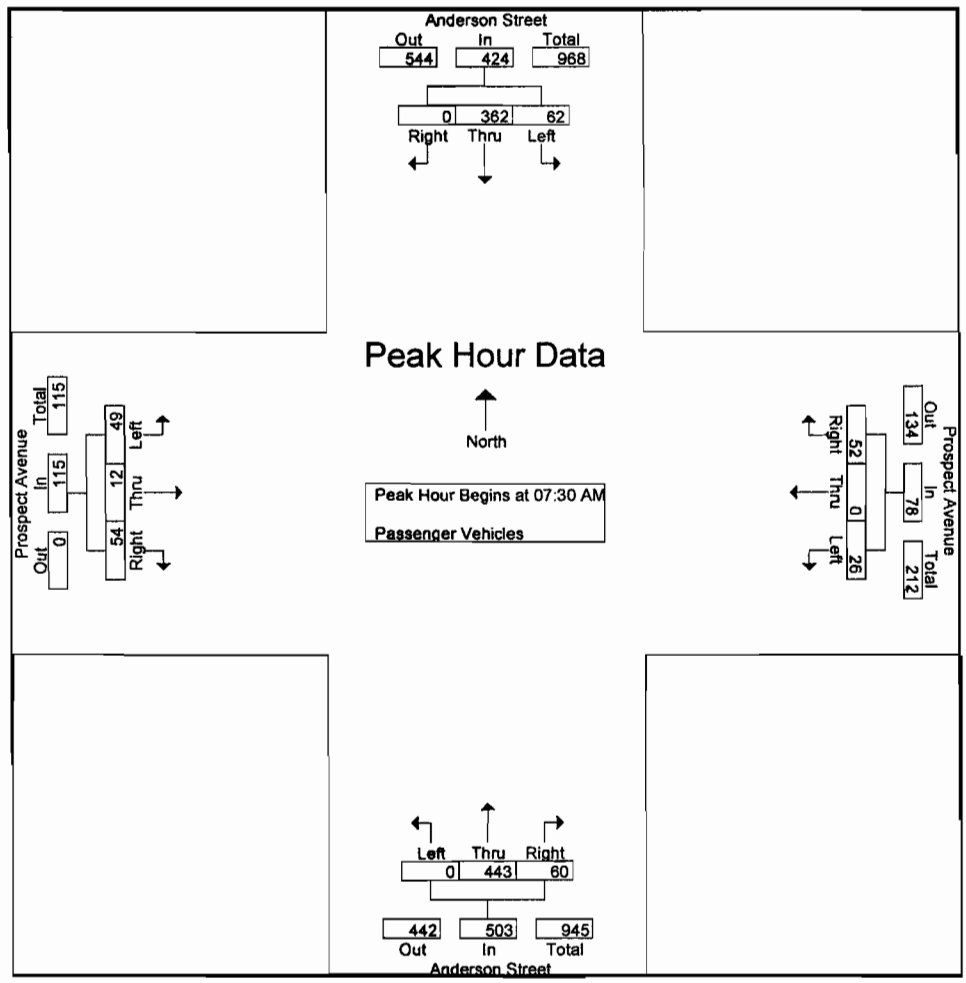

Peak Hour Analysis From 07:30 AM to 08:15 AM - Peak 1 of 1

Peak Hour for Each Approach Begins at:

	07:30 AM				07:30 AM				07:30 AM				07:30 AM			
+0 mins.	16	65	0	81	4	0	**17**	21	0	122	16	138	**21**	3	**17**	**41**
+15 mins.	14	101	0	115	7	0	14	21	0	**153**	**20**	**173**	13	3	11	27
+30 mins.	**18**	**104**	0	**122**	**8**	0	14	**22**	0	80	15	95	8	**4**	11	23
+45 mins.	14	92	0	106	7	0	7	14	0	88	9	97	7	2	15	24
Total Volume	62	362	0	424	26	0	52	78	0	443	60	503	49	12	54	115
% App. Total	14.6	85.4	0		33.3	0	66.7		0	88.1	11.9		42.6	10.4	47	
PHF	.861	.870	.000	.869	.813	.000	.765	.886	.000	.724	.750	.727	.583	.750	.794	.701

Counts Unlimited Inc.
PO Box 1178
Corona, CA 92878
(951) 268-6268

City of Loma Linda
N/S: Anderson Street
E/W: Prospect Avenue
Weather: Sunny

File Name : LMLANPRAM
Site Code : 00000001
Start Date : 10/12/2011
Page No : 1

Groups Printed- Large 2 Axle Vehicles

	Anderson Street Southbound				Prospect Avenue Westbound				Anderson Street Northbound				Prospect Avenue Eastbound				
Start Time	Left	Thru	Right	App. Total	Left	Thru	Right	App. Total	Left	Thru	Right	App. Total	Left	Thru	Right	App. Total	Int. Total
07:00 AM	3	9	0	12	0	0	2	2	0	4	1	5	1	2	0	3	22
07:15 AM	2	4	0	6	0	0	2	2	0	2	0	2	2	1	2	5	15
07:30 AM	2	4	0	6	2	0	2	4	0	6	2	8	1	1	1	3	21
07:45 AM	1	8	0	9	0	0	2	2	0	4	1	5	1	0	0	1	17
Total	8	25	0	33	2	0	8	10	0	16	4	20	5	4	3	12	75
08:00 AM	3	5	0	8	2	0	3	5	0	3	0	3	0	1	0	1	17
08:15 AM	1	9	0	10	0	0	2	2	0	3	1	4	2	2	0	4	20
08:30 AM	1	9	0	10	3	0	3	6	0	8	1	9	2	2	1	5	30
08:45 AM	0	10	0	10	2	0	4	6	0	6	1	7	4	3	3	10	33
Total	5	33	0	38	7	0	12	19	0	20	3	23	8	8	4	20	100
Grand Total	13	58	0	71	9	0	20	29	0	36	7	43	13	12	7	32	175
Apprch %	18.3	81.7	0		31	0	69		0	83.7	16.3		40.6	37.5	21.9		
Total %	7.4	33.1	0	40.6	5.1	0	11.4	16.6	0	20.6	4	24.6	7.4	6.9	4	18.3	

	Anderson Street Southbound				Prospect Avenue Westbound				Anderson Street Northbound				Prospect Avenue Eastbound				
Start Time	Left	Thru	Right	App. Total	Left	Thru	Right	App. Total	Left	Thru	Right	App. Total	Left	Thru	Right	App. Total	Int. Total
Peak Hour Analysis From 07:30 AM to 08:15 AM - Peak 1 of 1																	
Peak Hour for Entire Intersection Begins at 07:30 AM																	
07:30 AM	2	4	0	6	2	0	2	4	0	6	2	8	1	1	1	3	21
07:45 AM	1	8	0	9	0	0	2	2	0	4	1	5	1	0	0	1	17
08:00 AM	3	5	0	8	2	0	3	5	0	3	0	3	0	1	0	1	17
08:15 AM	1	9	0	10	0	0	2	2	0	3	1	4	2	2	0	4	20
Total Volume	7	26	0	33	4	0	9	13	0	16	4	20	4	4	1	9	75
% App. Total	21.2	78.8	0		30.8	0	69.2		0	80	20		44.4	44.4	11.1		
PHF	.583	.722	.000	.825	.500	.000	.750	.650	.000	.667	.500	.625	.500	.500	.250	.563	.893

Counts Unlimited Inc.
PO Box 1178
Corona, CA 92878
(951) 268-6268

City of Loma Linda
N/S: Anderson Street
E/W: Prospect Avenue
Weather: Sunny

File Name : LMLANPRAM
Site Code : 00000001
Start Date : 10/12/2011
Page No : 2

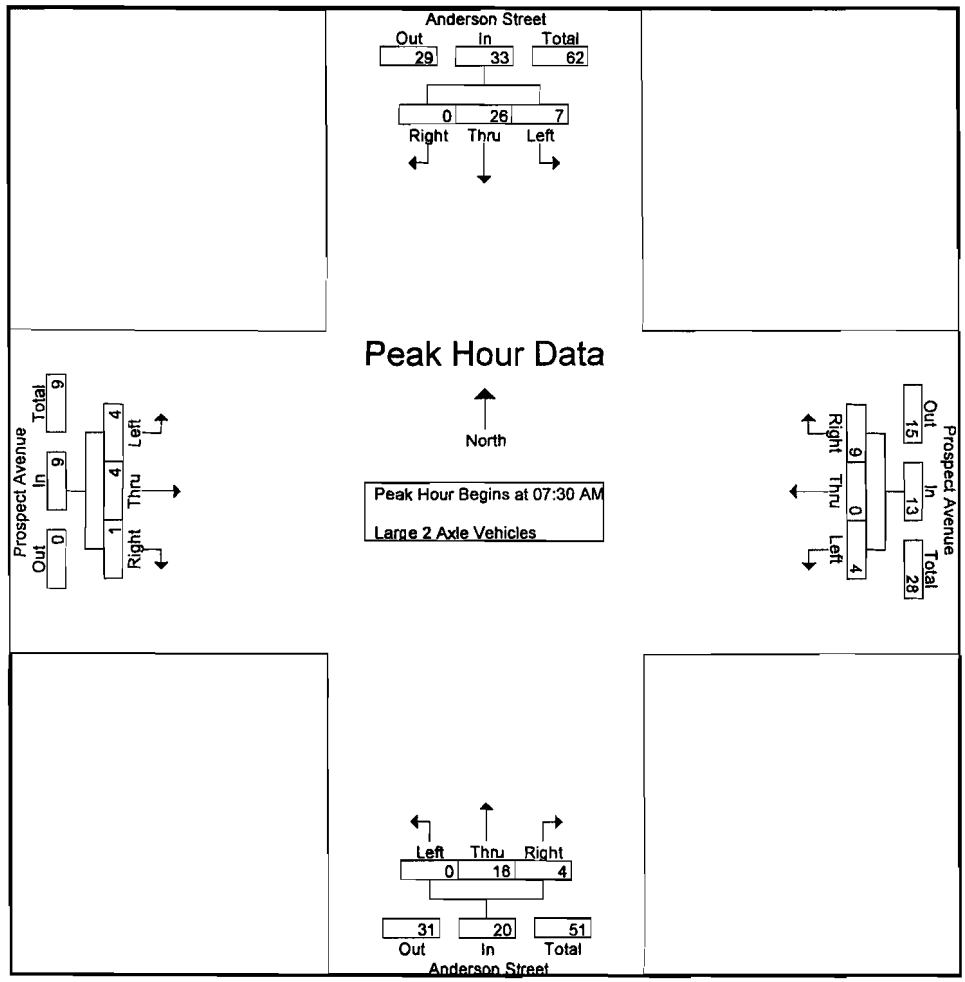

Peak Hour Analysis From 07:30 AM to 08:15 AM - Peak 1 of 1

Peak Hour for Each Approach Begins at:

	07:30 AM				07:30 AM				07:30 AM				07:30 AM			
+0 mins.	2	4	0	6	2	0	2	4	0	6	2	8	1	1	1	3
+15 mins.	1	8	0	9	0	0	2	2	0	4	1	5	1	0	0	1
+30 mins.	3	5	0	8	2	0	3	5	0	3	0	3	0	1	0	1
+45 mins.	1	9	0	10	0	0	2	2	0	3	1	4	2	2	0	4
Total Volume	7	26	0	33	4	0	9	13	0	16	4	20	4	4	1	9
% App. Total	21.2	78.8	0		30.8	0	69.2		0	80	20		44.4	44.4	11.1	
PHF	.583	.722	.000	.825	.500	.000	.750	.650	.000	.667	.500	.625	.500	.500	.250	.563

Counts Unlimited Inc.
PO Box 1178
Corona, CA 92878
(951) 268-6268

City of Loma Linda
N/S: Anderson Street
E/W: Prospect Avenue
Weather: Sunny

File Name : LMLANPRAM
Site Code : 00000001
Start Date : 10/12/2011
Page No : 1

Groups Printed- 3 Axle Vehicles

	Anderson Street Southbound				Prospect Avenue Westbound				Anderson Street Northbound				Prospect Avenue Eastbound				
Start Time	Left	Thru	Right	App. Total	Left	Thru	Right	App. Total	Left	Thru	Right	App. Total	Left	Thru	Right	App. Total	Int. Total
07:00 AM	0	0	0	0	0	0	0	0	0	0	0	0	0	0	0	0	0
07:15 AM	0	0	0	0	1	0	0	1	0	0	0	0	1	0	0	1	2
07:30 AM	0	0	0	0	0	0	0	0	0	0	0	0	0	0	0	0	0
07:45 AM	0	0	0	0	0	0	0	0	0	0	0	0	0	0	0	0	0
Total	0	0	0	0	1	0	0	1	0	0	0	0	1	0	0	1	2
08:00 AM	0	0	0	0	0	0	0	0	0	2	0	2	0	0	0	0	2
08:15 AM	0	0	0	0	0	0	0	0	0	0	0	0	0	0	0	0	0
08:30 AM	0	1	0	1	0	0	0	0	0	0	0	0	0	0	0	0	1
08:45 AM	0	1	0	1	0	0	0	0	0	0	0	0	0	0	0	0	1
Total	0	2	0	2	0	0	0	0	0	2	0	2	0	0	0	0	4
Grand Total	0	2	0	2	1	0	0	1	0	2	0	2	1	0	0	1	6
Apprch %	0	100	0		100	0	0		0	100	0		100	0	0		
Total %	0	33.3	0	33.3	16.7	0	0	16.7	0	33.3	0	33.3	16.7	0	0	16.7	

	Anderson Street Southbound				Prospect Avenue Westbound				Anderson Street Northbound				Prospect Avenue Eastbound				
Start Time	Left	Thru	Right	App. Total	Left	Thru	Right	App. Total	Left	Thru	Right	App. Total	Left	Thru	Right	App. Total	Int. Total
Peak Hour Analysis From 07:30 AM to 08:15 AM - Peak 1 of 1																	
Peak Hour for Entire Intersection Begins at 07:30 AM																	
07:30 AM	0	0	0	0	0	0	0	0	0	0	0	0	0	0	0	0	0
07:45 AM	0	0	0	0	0	0	0	0	0	0	0	0	0	0	0	0	0
08:00 AM	0	0	0	0	0	0	0	0	0	2	0	2	0	0	0	0	2
08:15 AM	0	0	0	0	0	0	0	0	0	0	0	0	0	0	0	0	0
Total Volume	0	0	0	0	0	0	0	0	0	2	0	2	0	0	0	0	2
% App. Total	0	0	0		0	0	0		0	100	0		0	0	0		
PHF	.000	.000	.000	.000	.000	.000	.000	.000	.000	.250	.000	.250	.000	.000	.000	.000	.250

Counts Unlimited Inc.
PO Box 1178
Corona, CA 92878
(951) 268-6268

City of Loma Linda
N/S: Anderson Street
E/W: Prospect Avenue
Weather: Sunny

File Name : LMLANPRAM
Site Code : 00000001
Start Date : 10/12/2011
Page No : 2

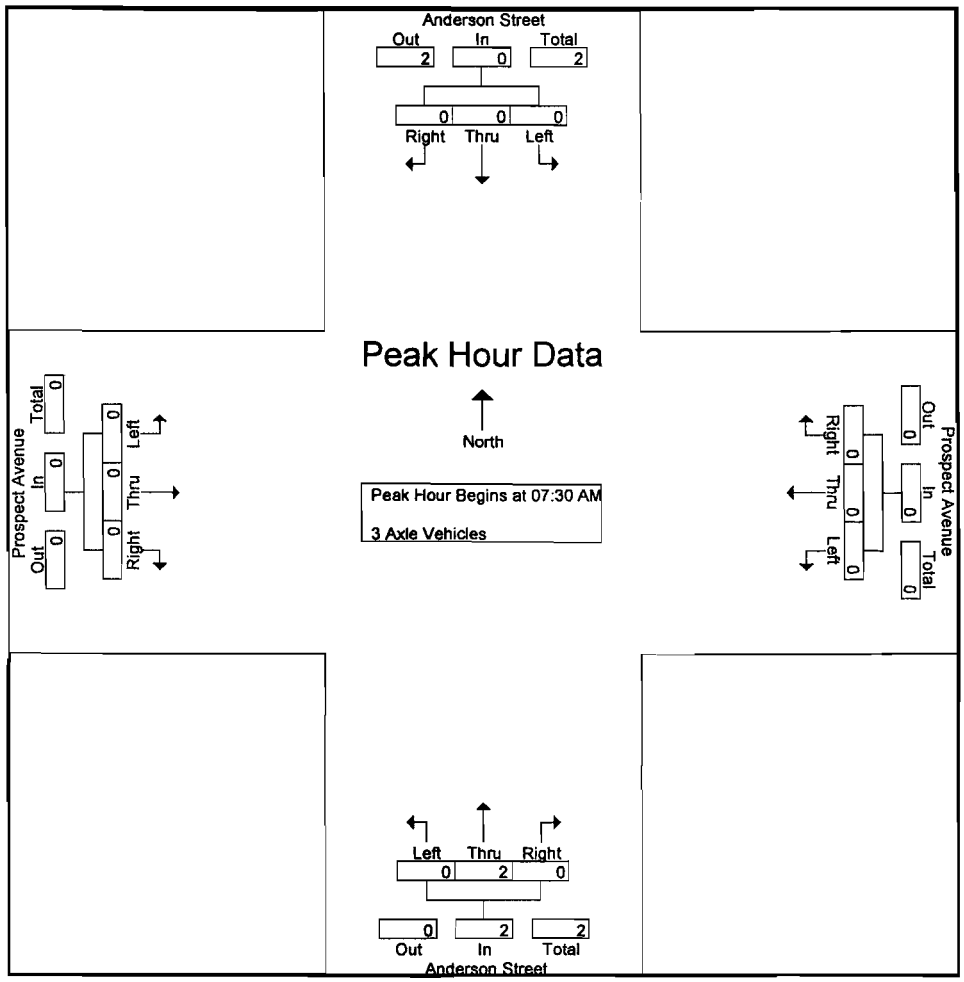

Peak Hour Analysis From 07:30 AM to 08:15 AM - Peak 1 of 1

Peak Hour for Each Approach Begins at:

	07:30 AM				07:30 AM				07:30 AM				07:30 AM			
+0 mins.	0	0	0	0	0	0	0	0	0	0	0	0	0	0	0	0
+15 mins.	0	0	0	0	0	0	0	0	0	0	0	0	0	0	0	0
+30 mins.	0	0	0	0	0	0	0	0	0	2	0	2	0	0	0	0
+45 mins.	0	0	0	0	0	0	0	0	0	0	0	0	0	0	0	0
Total Volume	0	0	0	0	0	0	0	0	0	2	0	2	0	0	0	0
% App. Total	0	0	0		0	0	0		0	100	0		0	0	0	
PHF	.000	.000	.000	.000	.000	.000	.000	.000	.000	.250	.000	.250	.000	.000	.000	.000

Counts Unlimited Inc.
PO Box 1178
Corona, CA 92878
(951) 268-6268

City of Loma Linda
N/S: Anderson Street
E/W: Prospect Avenue
Weather: Sunny

File Name : LMLANPRAM
Site Code : 00000001
Start Date : 10/12/2011
Page No : 1

Groups Printed- 4+ Axle Trucks

	Anderson Street Southbound				Prospect Avenue Westbound				Anderson Street Northbound				Prospect Avenue Eastbound				
Start Time	Left	Thru	Right	App. Total	Left	Thru	Right	App. Total	Left	Thru	Right	App. Total	Left	Thru	Right	App. Total	Int. Total
07:00 AM	0	0	0	0	0	0	0	0	0	0	0	0	0	0	0	0	0
07:15 AM	0	0	0	0	0	0	0	0	0	0	0	0	0	0	0	0	0
07:30 AM	0	0	0	0	0	0	0	0	0	0	0	0	0	0	0	0	0
07:45 AM	0	0	0	0	0	0	0	0	0	0	0	0	0	0	0	0	0
Total	0	0	0	0	0	0	0	0	0	0	0	0	0	0	0	0	0
08:00 AM	0	0	0	0	0	0	0	0	0	0	0	0	0	0	0	0	0
08:15 AM	0	0	0	0	0	0	0	0	0	0	0	0	0	0	0	0	0
08:30 AM	0	0	0	0	0	0	0	0	0	0	0	0	0	0	0	0	0
08:45 AM	0	0	0	0	0	0	0	0	0	0	0	0	0	0	0	0	0
Total	0	0	0	0	0	0	0	0	0	0	0	0	0	0	0	0	0
Grand Total	0	0	0	0	0	0	0	0	0	0	0	0	0	0	0	0	0
Apprch %	0	0	0		0	0	0		0	0	0		0	0	0		
Total %																	

	Anderson Street Southbound				Prospect Avenue Westbound				Anderson Street Northbound				Prospect Avenue Eastbound				
Start Time	Left	Thru	Right	App. Total	Left	Thru	Right	App. Total	Left	Thru	Right	App. Total	Left	Thru	Right	App. Total	Int. Total
Peak Hour Analysis From 07:30 AM to 08:15 AM - Peak 1 of 1																	
Peak Hour for Entire Intersection Begins at 07:30 AM																	
07:30 AM	0	0	0	0	0	0	0	0	0	0	0	0	0	0	0	0	0
07:45 AM	0	0	0	0	0	0	0	0	0	0	0	0	0	0	0	0	0
08:00 AM	0	0	0	0	0	0	0	0	0	0	0	0	0	0	0	0	0
08:15 AM	0	0	0	0	0	0	0	0	0	0	0	0	0	0	0	0	0
Total Volume	0	0	0	0	0	0	0	0	0	0	0	0	0	0	0	0	0
% App. Total	0	0	0		0	0	0		0	0	0		0	0	0		
PHF	.000	.000	.000	.000	.000	.000	.000	.000	.000	.000	.000	.000	.000	.000	.000	.000	.000

Counts Unlimited Inc.
PO Box 1178
Corona, CA 92878
(951) 268-6268

City of Loma Linda
N/S: Anderson Street
E/W: Prospect Avenue
Weather: Sunny

File Name : LMLANPRAM
Site Code : 00000001
Start Date : 10/12/2011
Page No : 2

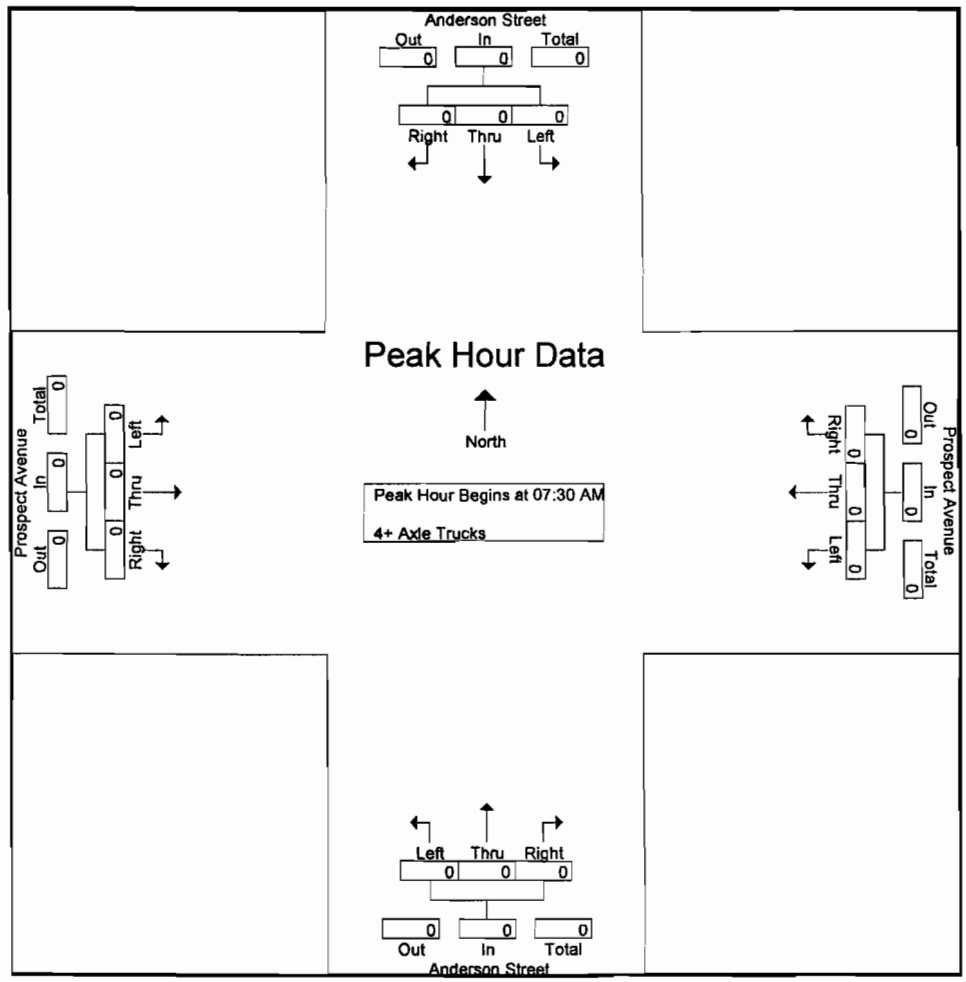

Peak Hour Analysis From 07:30 AM to 08:15 AM - Peak 1 of 1

Peak Hour for Each Approach Begins at:

	07:30 AM				07:30 AM				07:30 AM				07:30 AM			
+0 mins.	0	0	0	0	0	0	0	0	0	0	0	0	0	0	0	0
+15 mins.	0	0	0	0	0	0	0	0	0	0	0	0	0	0	0	0
+30 mins.	0	0	0	0	0	0	0	0	0	0	0	0	0	0	0	0
+45 mins.	0	0	0	0	0	0	0	0	0	0	0	0	0	0	0	0
Total Volume	0	0	0	0	0	0	0	0	0	0	0	0	0	0	0	0
% App. Total	0	0	0		0	0	0		0	0	0		0	0	0	
PHF	.000	.000	.000	.000	.000	.000	.000	.000	.000	.000	.000	.000	.000	.000	.000	.000

Counts Unlimited Inc.
PO Box 1178
Corona, CA 92878
(951) 268-6268

City of Loma Linda
N/S: Anderson Street
E/W: Prospect Avenue
Weather: Sunny

File Name : LMLANPRPM
Site Code : 00000001
Start Date : 10/12/2011
Page No : 1

Groups Printed- Passenger Vehicles - Large 2 Axle Vehicles - 3 Axle Vehicles - 4+ Axle Trucks

	Anderson Street Southbound				Prospect Avenue Westbound				Anderson Street Northbound				Prospect Avenue Eastbound				
Start Time	Left	Thru	Right	App. Total	Left	Thru	Right	App. Total	Left	Thru	Right	App. Total	Left	Thru	Right	App. Total	Int. Total
04:00 PM	19	85	0	104	21	0	16	37	0	96	12	108	20	4	25	49	298
04:15 PM	11	67	0	78	19	0	18	37	0	111	17	128	33	4	17	54	297
04:30 PM	13	103	0	116	19	0	29	48	0	101	12	113	16	7	34	57	334
04:45 PM	8	95	0	103	15	0	23	38	0	108	14	122	25	3	29	57	320
Total	51	350	0	401	74	0	86	160	0	416	55	471	94	18	105	217	1249
05:00 PM	12	103	0	115	19	0	25	44	0	108	15	123	30	7	41	78	360
05:15 PM	12	125	0	137	24	0	14	38	0	104	20	124	19	12	26	57	356
05:30 PM	12	92	0	104	9	0	15	24	0	89	13	102	14	1	24	39	269
05:45 PM	9	113	0	122	22	0	24	46	0	113	9	122	13	6	20	39	329
Total	45	433	0	478	74	0	78	152	0	414	57	471	76	26	111	213	1314
Grand Total	96	783	0	879	148	0	164	312	0	830	112	942	170	44	216	430	2563
Apprch %	10.9	89.1	0		47.4	0	52.6		0	88.1	11.9		39.5	10.2	50.2		
Total %	3.7	30.6	0	34.3	5.8	0	6.4	12.2	0	32.4	4.4	36.8	6.6	1.7	8.4	16.8	
Passenger Vehicles	90	726	0	816	141	0	149	290	0	779	108	887	155	34	206	395	2388
% Passenger Vehicles	93.8	92.7	0	92.8	95.3	0	90.9	92.9	0	93.9	96.4	94.2	91.2	77.3	95.4	91.9	93.2
Large 2 Axle Vehicles	6	55	0	61	6	0	15	21	0	51	4	55	15	10	10	35	172
% Large 2 Axle Vehicles	6.2	7	0	6.9	4.1	0	9.1	6.7	0	6.1	3.6	5.8	8.8	22.7	4.6	8.1	6.7
3 Axle Vehicles	0	1	0	1	1	0	0	1	0	0	0	0	0	0	0	0	2
% 3 Axle Vehicles	0	0.1	0	0.1	0.7	0	0	0.3	0	0	0	0	0	0	0	0	0.1
4+ Axle Trucks	0	1	0	1	0	0	0	0	0	0	0	0	0	0	0	0	1
% 4+ Axle Trucks	0	0.1	0	0.1	0	0	0	0	0	0	0	0	0	0	0	0	0

	Anderson Street Southbound				Prospect Avenue Westbound				Anderson Street Northbound				Prospect Avenue Eastbound				
Start Time	Left	Thru	Right	App. Total	Left	Thru	Right	App. Total	Left	Thru	Right	App. Total	Left	Thru	Right	App. Total	Int. Total
Peak Hour Analysis From 04:00 PM to 05:45 PM - Peak 1 of 1																	
Peak Hour for Entire Intersection Begins at 04:30 PM																	
04:30 PM	**13**	103	0	116	19	0	**29**	**48**	0	101	12	113	16	7	34	57	334
04:45 PM	8	95	0	103	15	0	23	38	0	**108**	14	122	25	3	29	57	320
05:00 PM	12	103	0	115	19	0	25	44	0	108	15	123	**30**	7	**41**	**78**	**360**
05:15 PM	12	**125**	0	**137**	**24**	0	14	38	0	104	**20**	**124**	19	**12**	26	57	356
Total Volume	45	426	0	471	77	0	91	168	0	421	61	482	90	29	130	249	1370
% App. Total	9.6	90.4	0		45.8	0	54.2		0	87.3	12.7		36.1	11.6	52.2		
PHF	.865	.852	.000	.859	.802	.000	.784	.875	.000	.975	.763	.972	.750	.604	.793	.798	.951

Counts Unlimited Inc.
PO Box 1178
Corona, CA 92878
(951) 268-6268

City of Loma Linda
N/S: Anderson Street
E/W: Prospect Avenue
Weather: Sunny

File Name : LMLANPRPM
Site Code : 00000001
Start Date : 10/12/2011
Page No : 2

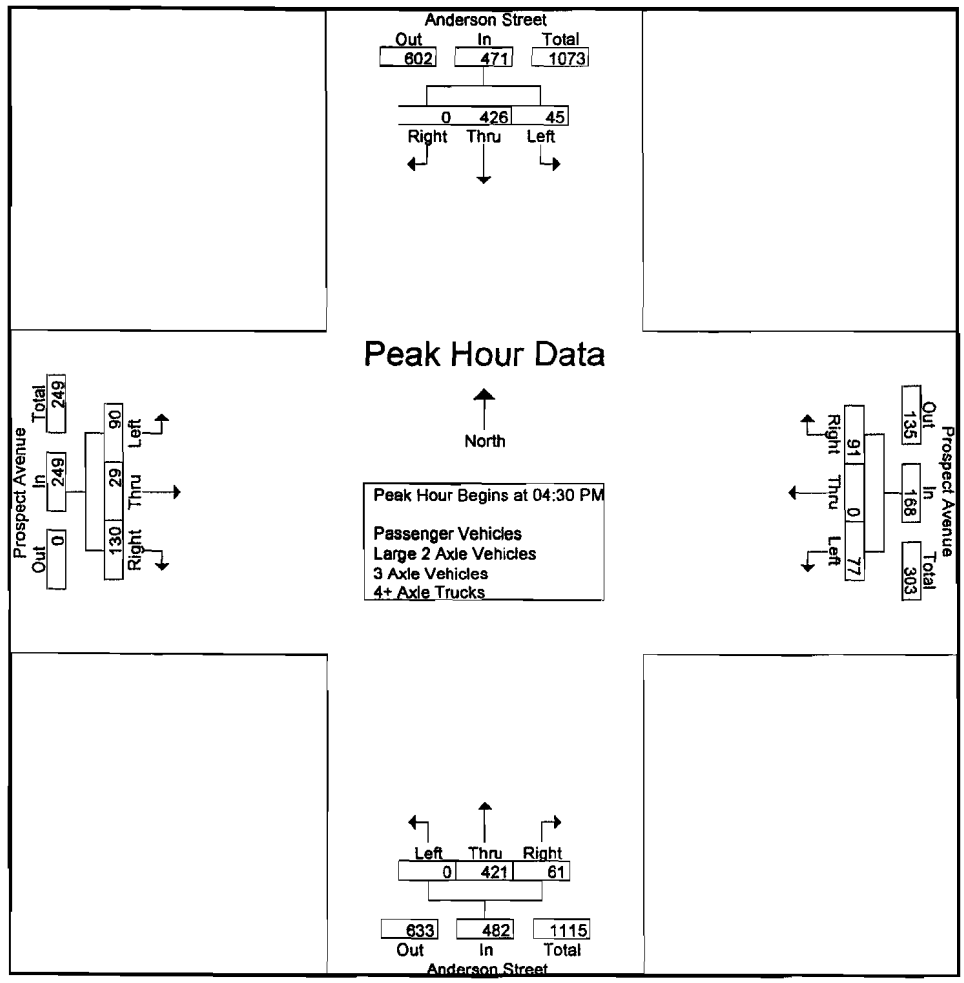

Peak Hour Analysis From 04:00 PM to 05:45 PM - Peak 1 of 1

Peak Hour for Each Approach Begins at:

	05:00 PM				04:30 PM				04:15 PM				04:30 PM			
+0 mins.	**12**	103	0	115	19	0	**29**	**48**	0	**111**	**17**	**128**	16	7	34	57
+15 mins.	12	**125**	0	**137**	15	0	23	38	0	101	12	113	25	3	29	57
+30 mins.	12	92	0	104	19	0	25	44	0	108	14	122	**30**	7	**41**	**78**
+45 mins.	9	113	0	122	**24**	0	14	38	0	108	15	123	19	**12**	26	57
Total Volume	45	433	0	478	77	0	91	168	0	428	58	486	90	29	130	249
% App. Total	9.4	90.6	0		45.8	0	54.2		0	88.1	11.9		36.1	11.6	52.2	
PHF	.938	.866	.000	.872	.802	.000	.784	.875	.000	.964	.853	.949	.750	.604	.793	.798

Counts Unlimited Inc.
PO Box 1178
Corona, CA 92878
(951) 268-6268

City of Loma Linda
N/S: Anderson Street
E/W: Prospect Avenue
Weather: Sunny

File Name : LMLANPRPM
Site Code : 00000001
Start Date : 10/12/2011
Page No : 1

Groups Printed- Passenger Vehicles

	Anderson Street Southbound				Prospect Avenue Westbound				Anderson Street Northbound				Prospect Avenue Eastbound				
Start Time	Left	Thru	Right	App. Total	Left	Thru	Right	App. Total	Left	Thru	Right	App. Total	Left	Thru	Right	App. Total	Int. Total
04:00 PM	19	81	0	100	21	0	15	36	0	89	12	101	16	3	23	42	279
04:15 PM	11	63	0	74	17	0	16	33	0	104	16	120	32	3	16	51	278
04:30 PM	13	93	0	106	18	0	26	44	0	94	12	106	13	6	33	52	308
04:45 PM	8	87	0	95	13	0	22	35	0	101	14	115	23	2	28	53	298
Total	51	324	0	375	69	0	79	148	0	388	54	442	84	14	100	198	1163
05:00 PM	12	98	0	110	19	0	22	41	0	103	14	117	27	6	39	72	340
05:15 PM	9	114	0	123	22	0	13	35	0	99	19	118	18	9	24	51	327
05:30 PM	9	85	0	94	9	0	11	20	0	83	12	95	13	0	24	37	246
05:45 PM	9	105	0	114	22	0	24	46	0	106	9	115	13	5	19	37	312
Total	39	402	0	441	72	0	70	142	0	391	54	445	71	20	106	197	1225
Grand Total	90	726	0	816	141	0	149	290	0	779	108	887	155	34	206	395	2388
Apprch %	11	89	0		48.6	0	51.4		0	87.8	12.2		39.2	8.6	52.2		
Total %	3.8	30.4	0	34.2	5.9	0	6.2	12.1	0	32.6	4.5	37.1	6.5	1.4	8.6	16.5	

	Anderson Street Southbound				Prospect Avenue Westbound				Anderson Street Northbound				Prospect Avenue Eastbound				
Start Time	Left	Thru	Right	App. Total	Left	Thru	Right	App. Total	Left	Thru	Right	App. Total	Left	Thru	Right	App. Total	Int. Total
Peak Hour Analysis From 04:30 PM to 05:15 PM - Peak 1 of 1																	
Peak Hour for Entire Intersection Begins at 04:30 PM																	
04:30 PM	**13**	93	0	106	18	0	**26**	**44**	0	94	12	106	13	6	33	52	308
04:45 PM	8	87	0	95	13	0	22	35	0	101	14	115	23	2	28	53	298
05:00 PM	12	98	0	110	19	0	22	41	0	**103**	14	117	**27**	6	**39**	**72**	**340**
05:15 PM	9	**114**	0	**123**	**22**	0	13	35	0	99	**19**	**118**	18	**9**	24	51	327
Total Volume	42	392	0	434	72	0	83	155	0	397	59	456	81	23	124	228	1273
% App. Total	9.7	90.3	0		46.5	0	53.5		0	87.1	12.9		35.5	10.1	54.4		
PHF	.808	.860	.000	.882	.818	.000	.798	.881	.000	.964	.776	.966	.750	.639	.795	.792	.936

Counts Unlimited Inc.
PO Box 1178
Corona, CA 92878
(951) 268-6268

City of Loma Linda
N/S: Anderson Street
E/W: Prospect Avenue
Weather: Sunny

File Name : LMLANPRPM
Site Code : 00000001
Start Date : 10/12/2011
Page No : 2

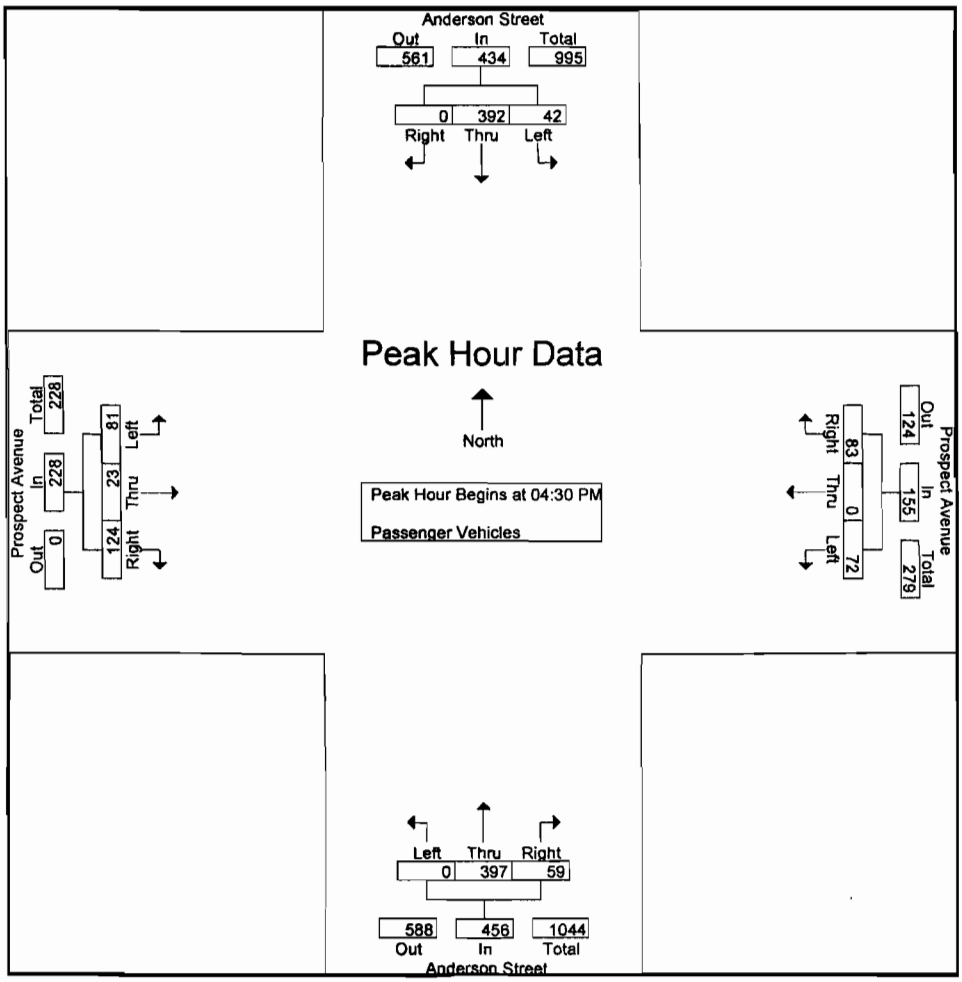

Peak Hour Analysis From 04:30 PM to 05:15 PM - Peak 1 of 1

Peak Hour for Each Approach Begins at:

	04:30 PM				04:30 PM				04:30 PM				04:30 PM			
+0 mins.	**13**	93	0	106	18	0	**26**	**44**	0	94	12	106	13	6	33	52
+15 mins.	8	87	0	95	13	0	22	35	0	101	14	115	23	2	28	53
+30 mins.	12	98	0	110	19	0	22	41	0	**103**	14	117	**27**	6	**39**	**72**
+45 mins.	9	**114**	0	**123**	**22**	0	13	35	0	99	**19**	**118**	18	**9**	24	51
Total Volume	42	392	0	434	72	0	83	155	0	397	59	456	81	23	124	228
% App. Total	9.7	90.3	0		46.5	0	53.5		0	87.1	12.9		35.5	10.1	54.4	
PHF	.808	.860	.000	.882	.818	.000	.798	.881	.000	.964	.776	.966	.750	.639	.795	.792

Counts Unlimited Inc.
PO Box 1178
Corona, CA 92878
(951) 268-6268

City of Loma Linda
N/S: Anderson Street
E/W: Prospect Avenue
Weather: Sunny

File Name : LMLANPRPM
Site Code : 00000001
Start Date : 10/12/2011
Page No : 1

Groups Printed- Large 2 Axle Vehicles

	Anderson Street Southbound				Prospect Avenue Westbound				Anderson Street Northbound				Prospect Avenue Eastbound				
Start Time	Left	Thru	Right	App. Total	Left	Thru	Right	App. Total	Left	Thru	Right	App. Total	Left	Thru	Right	App. Total	Int. Total
04:00 PM	0	4	0	4	0	0	1	1	0	7	0	7	4	1	2	7	19
04:15 PM	0	4	0	4	1	0	2	3	0	7	1	8	1	1	1	3	18
04:30 PM	0	9	0	9	1	0	3	4	0	7	0	7	3	1	1	5	25
04:45 PM	0	8	0	8	2	0	1	3	0	7	0	7	2	1	1	4	22
Total	0	25	0	25	4	0	7	11	0	28	1	29	10	4	5	19	84
05:00 PM	0	4	0	4	0	0	3	3	0	5	1	6	3	1	2	6	19
05:15 PM	3	11	0	14	2	0	1	3	0	5	1	6	1	3	2	6	29
05:30 PM	3	7	0	10	0	0	4	4	0	6	1	7	1	1	0	2	23
05:45 PM	0	8	0	8	0	0	0	0	0	7	0	7	0	1	1	2	17
Total	6	30	0	36	2	0	8	10	0	23	3	26	5	6	5	16	88
Grand Total	6	55	0	61	6	0	15	21	0	51	4	55	15	10	10	35	172
Apprch %	9.8	90.2	0		28.6	0	71.4		0	92.7	7.3		42.9	28.6	28.6		
Total %	3.5	32	0	35.5	3.5	0	8.7	12.2	0	29.7	2.3	32	8.7	5.8	5.8	20.3	

	Anderson Street Southbound				Prospect Avenue Westbound				Anderson Street Northbound				Prospect Avenue Eastbound				
Start Time	Left	Thru	Right	App. Total	Left	Thru	Right	App. Total	Left	Thru	Right	App. Total	Left	Thru	Right	App. Total	Int. Total
Peak Hour Analysis From 04:30 PM to 05:15 PM - Peak 1 of 1																	
Peak Hour for Entire Intersection Begins at 04:30 PM																	
04:30 PM	0	9	0	9	1	0	3	4	0	7	0	7	3	1	1	5	25
04:45 PM	0	8	0	8	2	0	1	3	0	7	0	7	2	1	1	4	22
05:00 PM	0	4	0	4	0	0	3	3	0	5	1	6	3	1	2	6	19
05:15 PM	3	11	0	14	2	0	1	3	0	5	1	6	1	3	2	6	29
Total Volume	3	32	0	35	5	0	8	13	0	24	2	26	9	6	6	21	95
% App. Total	8.6	91.4	0		38.5	0	61.5		0	92.3	7.7		42.9	28.6	28.6		
PHF	.250	.727	.000	.625	.625	.000	.667	.813	.000	.857	.500	.929	.750	.500	.750	.875	.819

Counts Unlimited Inc.
PO Box 1178
Corona, CA 92878
(951) 268-6268

City of Loma Linda
N/S: Anderson Street
E/W: Prospect Avenue
Weather: Sunny

File Name : LMLANPRPM
Site Code : 00000001
Start Date : 10/12/2011
Page No : 2

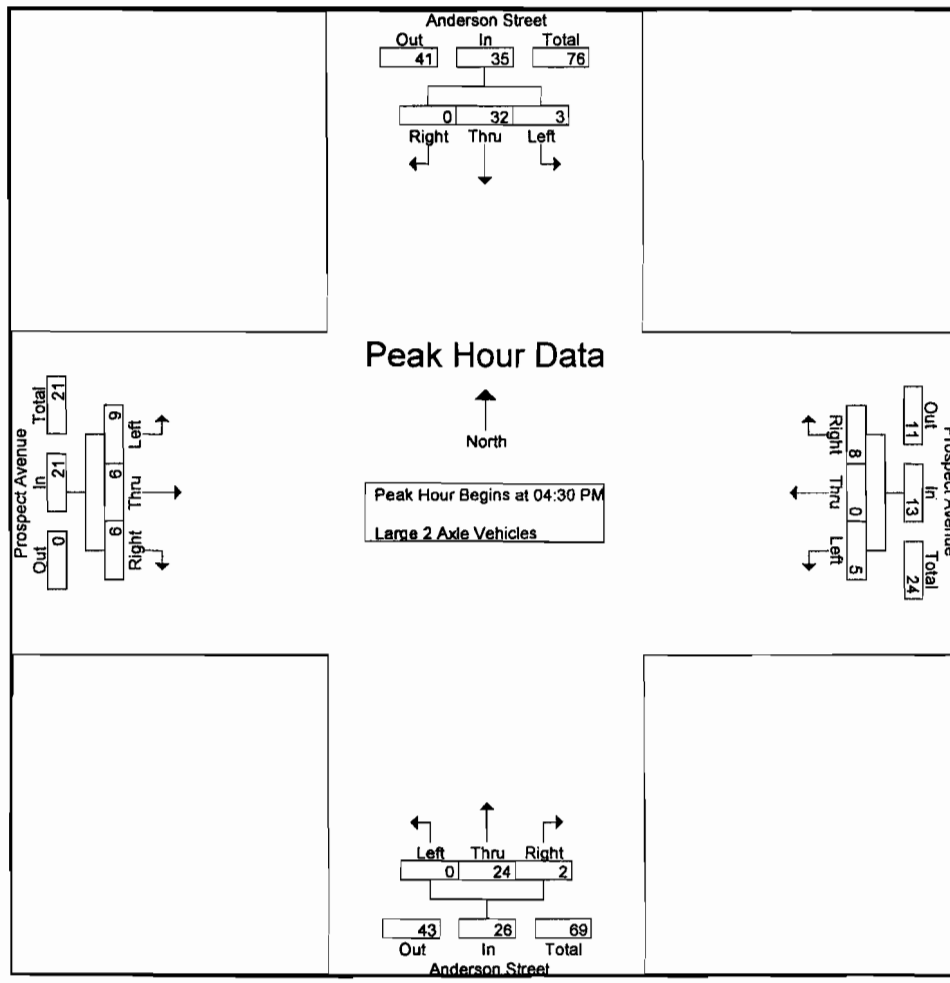

Peak Hour Analysis From 04:30 PM to 05:15 PM - Peak 1 of 1

Peak Hour for Each Approach Begins at:

	04:30 PM				04:30 PM				04:30 PM				04:30 PM			
+0 mins.	0	9	0	9	1	0	3	4	0	7	0	7	3	1	1	5
+15 mins.	0	8	0	8	2	0	1	3	0	7	0	7	2	1	1	4
+30 mins.	0	4	0	4	0	0	3	3	0	5	1	6	3	1	2	6
+45 mins.	3	11	0	14	2	0	1	3	0	5	1	6	1	3	2	6
Total Volume	3	32	0	35	5	0	8	13	0	24	2	26	9	6	6	21
% App. Total	8.6	91.4	0		38.5	0	61.5		0	92.3	7.7		42.9	28.6	28.6	
PHF	.250	.727	.000	.625	.625	.000	.667	.813	.000	.857	.500	.929	.750	.500	.750	.875

Counts Unlimited Inc.
PO Box 1178
Corona, CA 92878
(951) 268-6268

City of Loma Linda
N/S: Anderson Street
E/W: Prospect Avenue
Weather: Sunny

File Name : LMLANPRPM
Site Code : 00000001
Start Date : 10/12/2011
Page No : 1

Groups Printed- 3 Axle Vehicles

	Anderson Street Southbound				Prospect Avenue Westbound				Anderson Street Northbound				Prospect Avenue Eastbound				
Start Time	Left	Thru	Right	App. Total	Left	Thru	Right	App. Total	Left	Thru	Right	App. Total	Left	Thru	Right	App. Total	Int. Total
04:00 PM	0	0	0	0	0	0	0	0	0	0	0	0	0	0	0	0	0
04:15 PM	0	0	0	0	1	0	0	1	0	0	0	0	0	0	0	0	1
04:30 PM	0	0	0	0	0	0	0	0	0	0	0	0	0	0	0	0	0
04:45 PM	0	0	0	0	0	0	0	0	0	0	0	0	0	0	0	0	0
Total	0	0	0	0	1	0	0	1	0	0	0	0	0	0	0	0	1
05:00 PM	0	1	0	1	0	0	0	0	0	0	0	0	0	0	0	0	1
05:15 PM	0	0	0	0	0	0	0	0	0	0	0	0	0	0	0	0	0
05:30 PM	0	0	0	0	0	0	0	0	0	0	0	0	0	0	0	0	0
05:45 PM	0	0	0	0	0	0	0	0	0	0	0	0	0	0	0	0	0
Total	0	1	0	1	0	0	0	0	0	0	0	0	0	0	0	0	1
Grand Total	0	1	0	1	1	0	0	1	0	0	0	0	0	0	0	0	2
Apprch %	0	100	0		100	0	0		0	0	0		0	0	0		
Total %	0	50	0	50	50	0	0	50	0	0	0	0	0	0	0	0	

	Anderson Street Southbound				Prospect Avenue Westbound				Anderson Street Northbound				Prospect Avenue Eastbound				
Start Time	Left	Thru	Right	App. Total	Left	Thru	Right	App. Total	Left	Thru	Right	App. Total	Left	Thru	Right	App. Total	Int. Total
Peak Hour Analysis From 04:30 PM to 05:15 PM - Peak 1 of 1																	
Peak Hour for Entire Intersection Begins at 04:30 PM																	
04:30 PM	0	0	0	0	0	0	0	0	0	0	0	0	0	0	0	0	0
04:45 PM	0	0	0	0	0	0	0	0	0	0	0	0	0	0	0	0	0
05:00 PM	0	1	0	1	0	0	0	0	0	0	0	0	0	0	0	0	1
05:15 PM	0	0	0	0	0	0	0	0	0	0	0	0	0	0	0	0	0
Total Volume	0	1	0	1	0	0	0	0	0	0	0	0	0	0	0	0	1
% App. Total	0	100	0		0	0	0		0	0	0		0	0	0		
PHF	.000	.250	.000	.250	.000	.000	.000	.000	.000	.000	.000	.000	.000	.000	.000	.000	.250

Counts Unlimited Inc.
PO Box 1178
Corona, CA 92878
(951) 268-6268

City of Loma Linda
N/S: Anderson Street
E/W: Prospect Avenue
Weather: Sunny

File Name : LMLANPRPM
Site Code : 00000001
Start Date : 10/12/2011
Page No : 2

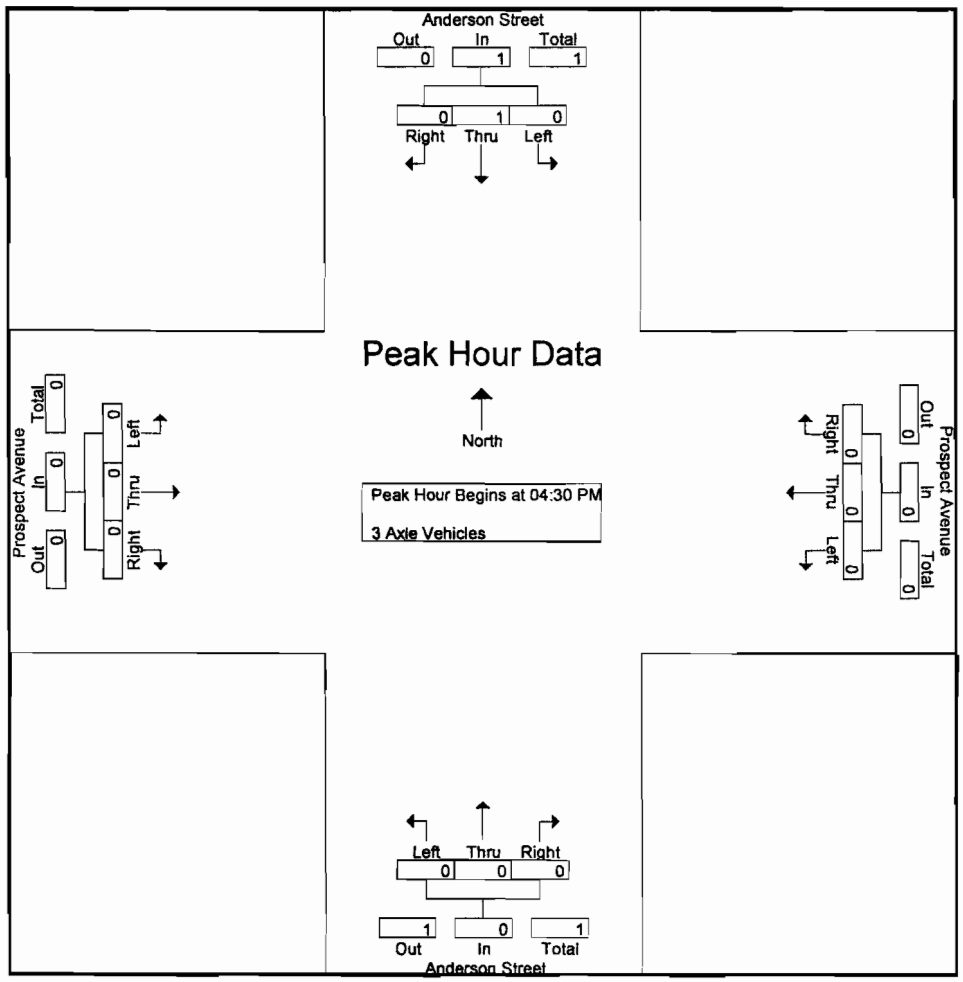

Peak Hour Analysis From 04:30 PM to 05:15 PM - Peak 1 of 1

Peak Hour for Each Approach Begins at:

	04:30 PM				04:30 PM				04:30 PM				04:30 PM			
+0 mins.	0	0	0	0	0	0	0	0	0	0	0	0	0	0	0	0
+15 mins.	0	0	0	0	0	0	0	0	0	0	0	0	0	0	0	0
+30 mins.	0	1	0	1	0	0	0	0	0	0	0	0	0	0	0	0
+45 mins.	0	0	0	0	0	0	0	0	0	0	0	0	0	0	0	0
Total Volume	0	1	0	1	0	0	0	0	0	0	0	0	0	0	0	0
% App. Total	0	100	0		0	0	0		0	0	0		0	0	0	
PHF	.000	.250	.000	.250	.000	.000	.000	.000	.000	.000	.000	.000	.000	.000	.000	.000

Counts Unlimited Inc.
PO Box 1178
Corona, CA 92878
(951) 268-6268

City of Loma Linda
N/S: Anderson Street
E/W: Prospect Avenue
Weather: Sunny

File Name : LMLANPRPM
Site Code : 00000001
Start Date : 10/12/2011
Page No : 1

Groups Printed- 4+ Axle Trucks

	Anderson Street Southbound				Prospect Avenue Westbound				Anderson Street Northbound				Prospect Avenue Eastbound				
Start Time	Left	Thru	Right	App. Total	Left	Thru	Right	App. Total	Left	Thru	Right	App. Total	Left	Thru	Right	App. Total	Int. Total
04:00 PM	0	0	0	0	0	0	0	0	0	0	0	0	0	0	0	0	0
04:15 PM	0	0	0	0	0	0	0	0	0	0	0	0	0	0	0	0	0
04:30 PM	0	1	0	1	0	0	0	0	0	0	0	0	0	0	0	0	1
04:45 PM	0	0	0	0	0	0	0	0	0	0	0	0	0	0	0	0	0
Total	0	1	0	1	0	0	0	0	0	0	0	0	0	0	0	0	1
05:00 PM	0	0	0	0	0	0	0	0	0	0	0	0	0	0	0	0	0
05:15 PM	0	0	0	0	0	0	0	0	0	0	0	0	0	0	0	0	0
05:30 PM	0	0	0	0	0	0	0	0	0	0	0	0	0	0	0	0	0
05:45 PM	0	0	0	0	0	0	0	0	0	0	0	0	0	0	0	0	0
Total	0	0	0	0	0	0	0	0	0	0	0	0	0	0	0	0	0
Grand Total	0	1	0	1	0	0	0	0	0	0	0	0	0	0	0	0	1
Apprch %	0	100	0		0	0	0		0	0	0		0	0	0		
Total %	0	100	0	100	0	0	0	0	0	0	0	0	0	0	0	0	

	Anderson Street Southbound				Prospect Avenue Westbound				Anderson Street Northbound				Prospect Avenue Eastbound				
Start Time	Left	Thru	Right	App. Total	Left	Thru	Right	App. Total	Left	Thru	Right	App. Total	Left	Thru	Right	App. Total	Int. Total
Peak Hour Analysis From 04:30 PM to 05:15 PM - Peak 1 of 1																	
Peak Hour for Entire Intersection Begins at 04:30 PM																	
04:30 PM	0	1	0	1	0	0	0	0	0	0	0	0	0	0	0	0	1
04:45 PM	0	0	0	0	0	0	0	0	0	0	0	0	0	0	0	0	0
05:00 PM	0	0	0	0	0	0	0	0	0	0	0	0	0	0	0	0	0
05:15 PM	0	0	0	0	0	0	0	0	0	0	0	0	0	0	0	0	0
Total Volume	0	1	0	1	0	0	0	0	0	0	0	0	0	0	0	0	1
% App. Total	0	100	0		0	0	0		0	0	0		0	0	0		
PHF	.000	.250	.000	.250	.000	.000	.000	.000	.000	.000	.000	.000	.000	.000	.000	.000	.250

Counts Unlimited Inc.
PO Box 1178
Corona, CA 92878
(951) 268-6268

City of Loma Linda
N/S: Anderson Street
E/W: Prospect Avenue
Weather: Sunny

File Name : LMLANPRPM
Site Code : 00000001
Start Date : 10/12/2011
Page No : 2

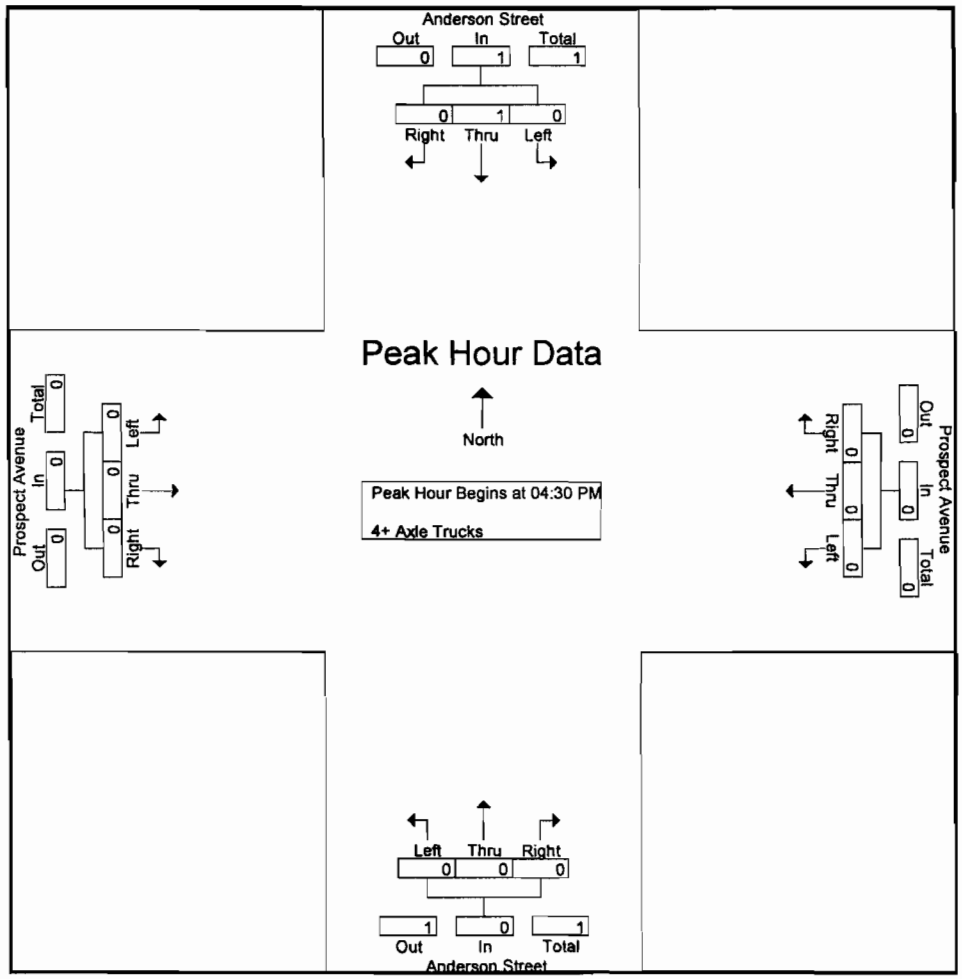

Peak Hour Analysis From 04:30 PM to 05:15 PM - Peak 1 of 1

Peak Hour for Each Approach Begins at:

	04:30 PM				04:30 PM				04:30 PM				04:30 PM			
+0 mins.	0	1	0	1	0	0	0	0	0	0	0	0	0	0	0	0
+15 mins.	0	0	0	0	0	0	0	0	0	0	0	0	0	0	0	0
+30 mins.	0	0	0	0	0	0	0	0	0	0	0	0	0	0	0	0
+45 mins.	0	0	0	0	0	0	0	0	0	0	0	0	0	0	0	0
Total Volume	0	1	0	1	0	0	0	0	0	0	0	0	0	0	0	0
% App. Total	0	100	0		0	0	0		0	0	0		0	0	0	
PHF	.000	.250	.000	.250	.000	.000	.000	.000	.000	.000	.000	.000	.000	.000	.000	.000

Counts Unlimited Inc.
PO Box 1178
Corona, CA 92878
(951) 268-6268

City of Loma Linda
N/S: Anderson Street
E/W: Loma Linda Hospital Entrance
Weather: Sunny

File Name : LMLANHOAM
Site Code : 00000001
Start Date : 10/12/2011
Page No : 1

Groups Printed- Passenger Vehicles - Large 2 Axle Vehicles - 3 Axle Vehicles - 4+ Axle Trucks

	Anderson Street Southbound			Anderson Street Northbound			Loma Linda Hospital Entrance Eastbound			
Start Time	Thru	Right	App. Total	Left	Thru	App. Total	Left	Right	App. Total	Int. Total
07:00 AM	48	14	62	25	65	90	13	16	29	181
07:15 AM	58	16	74	25	78	103	9	10	19	196
07:30 AM	71	18	89	34	133	167	10	22	32	288
07:45 AM	99	26	125	42	162	204	15	19	34	363
Total	276	74	350	126	438	564	47	67	114	1028
08:00 AM	91	38	129	35	67	102	12	12	24	255
08:15 AM	87	34	121	41	83	124	7	19	26	271
08:30 AM	72	31	103	38	84	122	7	24	31	256
08:45 AM	77	31	108	36	67	103	6	20	26	237
Total	327	134	461	150	301	451	32	75	107	1019
Grand Total	603	208	811	276	739	1015	79	142	221	2047
Apprch %	74.4	25.6		27.2	72.8		35.7	64.3		
Total %	29.5	10.2	39.6	13.5	36.1	49.6	3.9	6.9	10.8	
Passenger Vehicles	601	203	804	263	734	997	79	125	204	2005
% Passenger Vehicles	99.7	97.6	99.1	95.3	99.3	98.2	100	88	92.3	97.9
Large 2 Axle Vehicles	0	5	5	13	0	13	0	17	17	35
% Large 2 Axle Vehicles	0	2.4	0.6	4.7	0	1.3	0	12	7.7	1.7
3 Axle Vehicles	1	0	1	0	2	2	0	0	0	3
% 3 Axle Vehicles	0.2	0	0.1	0	0.3	0.2	0	0	0	0.1
4+ Axle Trucks	1	0	1	0	3	3	0	0	0	4
% 4+ Axle Trucks	0.2	0	0.1	0	0.4	0.3	0	0	0	0.2

	Anderson Street Southbound			Anderson Street Northbound			Loma Linda Hospital Entrance Eastbound			
Start Time	Thru	Right	App. Total	Left	Thru	App. Total	Left	Right	App. Total	Int. Total
Peak Hour Analysis From 07:00 AM to 08:45 AM - Peak 1 of 1										
Peak Hour for Entire Intersection Begins at 07:30 AM										
07:30 AM	71	18	89	34	133	167	10	**22**	32	288
07:45 AM	**99**	26	125	**42**	**162**	**204**	**15**	19	**34**	**363**
08:00 AM	91	**38**	**129**	35	67	102	12	12	24	255
08:15 AM	87	34	121	41	83	124	7	19	26	271
Total Volume	348	116	464	152	445	597	44	72	116	1177
% App. Total	75	25		25.5	74.5		37.9	62.1		
PHF	.879	.763	.899	.905	.687	.732	.733	.818	.853	.811

Counts Unlimited Inc.
PO Box 1178
Corona, CA 92878
(951) 268-6268

City of Loma Linda
N/S: Anderson Street
E/W: Loma Linda Hospital Entrance
Weather: Sunny

File Name : LMLANHOAM
Site Code : 00000001
Start Date : 10/12/2011
Page No : 2

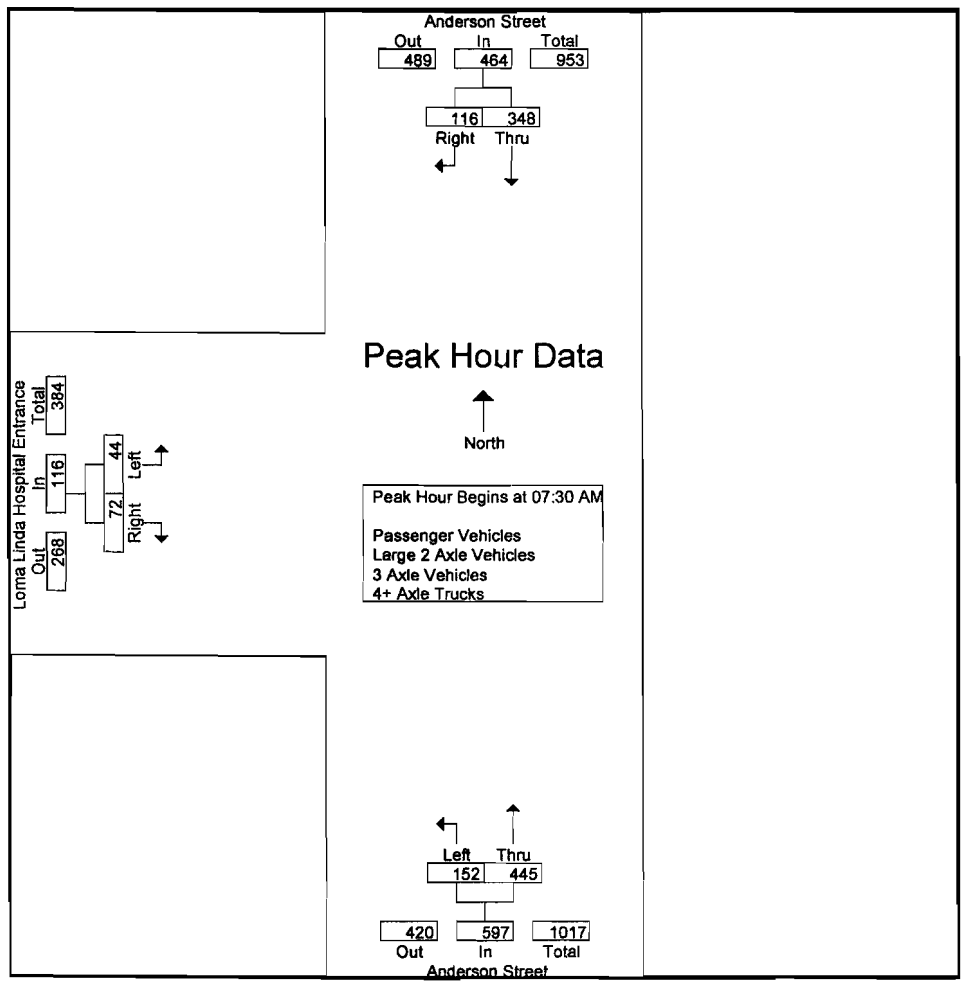

Peak Hour Analysis From 07:00 AM to 08:45 AM - Peak 1 of 1

Peak Hour for Each Approach Begins at:

	07:45 AM			07:30 AM			07:30 AM		
+0 mins.	**99**	26	125	34	133	167	10	**22**	32
+15 mins.	91	**38**	**129**	**42**	**162**	**204**	**15**	19	**34**
+30 mins.	87	34	121	35	67	102	12	12	24
+45 mins.	72	31	103	41	83	124	7	19	26
Total Volume	349	129	478	152	445	597	44	72	116
% App. Total	73	27		25.5	74.5		37.9	62.1	
PHF	.881	.849	.926	.905	.687	.732	.733	.818	.853

Counts Unlimited Inc.
PO Box 1178
Corona, CA 92878
(951) 268-6268

City of Loma Linda
N/S: Anderson Street
E/W: Loma Linda Hospital Entrance
Weather: Sunny

File Name : LMLANHOAM
Site Code : 00000001
Start Date : 10/12/2011
Page No : 1

Groups Printed- Passenger Vehicles

	Anderson Street Southbound			Anderson Street Northbound			Loma Linda Hospital Entrance Eastbound			
Start Time	Thru	Right	App. Total	Left	Thru	App. Total	Left	Right	App. Total	Int. Total
07:00 AM	48	14	62	23	65	88	13	13	26	176
07:15 AM	56	16	72	24	78	102	9	9	18	192
07:30 AM	71	17	88	33	132	165	10	19	29	282
07:45 AM	99	26	125	40	162	202	15	18	33	360
Total	274	73	347	120	437	557	47	59	106	1010
08:00 AM	91	36	127	34	65	99	12	9	21	247
08:15 AM	87	34	121	39	82	121	7	17	24	266
08:30 AM	72	29	101	36	84	120	7	21	28	249
08:45 AM	77	31	108	34	66	100	6	19	25	233
Total	327	130	457	143	297	440	32	66	98	995
Grand Total	601	203	804	263	734	997	79	125	204	2005
Apprch %	74.8	25.2		26.4	73.6		38.7	61.3		
Total %	30	10.1	40.1	13.1	36.6	49.7	3.9	6.2	10.2	

	Anderson Street Southbound			Anderson Street Northbound			Loma Linda Hospital Entrance Eastbound			
Start Time	Thru	Right	App. Total	Left	Thru	App. Total	Left	Right	App. Total	Int. Total
Peak Hour Analysis From 07:30 AM to 08:15 AM - Peak 1 of 1										
Peak Hour for Entire Intersection Begins at 07:30 AM										
07:30 AM	71	17	88	33	132	165	10	**19**	29	282
07:45 AM	**99**	26	125	**40**	**162**	**202**	**15**	18	**33**	**360**
08:00 AM	91	**36**	**127**	34	65	99	12	9	21	247
08:15 AM	87	34	121	39	82	121	7	17	24	266
Total Volume	348	113	461	146	441	587	44	63	107	1155
% App. Total	75.5	24.5		24.9	75.1		41.1	58.9		
PHF	.879	.785	.907	.913	.681	.726	.733	.829	.811	.802

Counts Unlimited Inc.
PO Box 1178
Corona, CA 92878
(951) 268-6268

City of Loma Linda
N/S: Anderson Street
E/W: Loma Linda Hospital Entrance
Weather: Sunny

File Name : LMLANHOAM
Site Code : 00000001
Start Date : 10/12/2011
Page No : 2

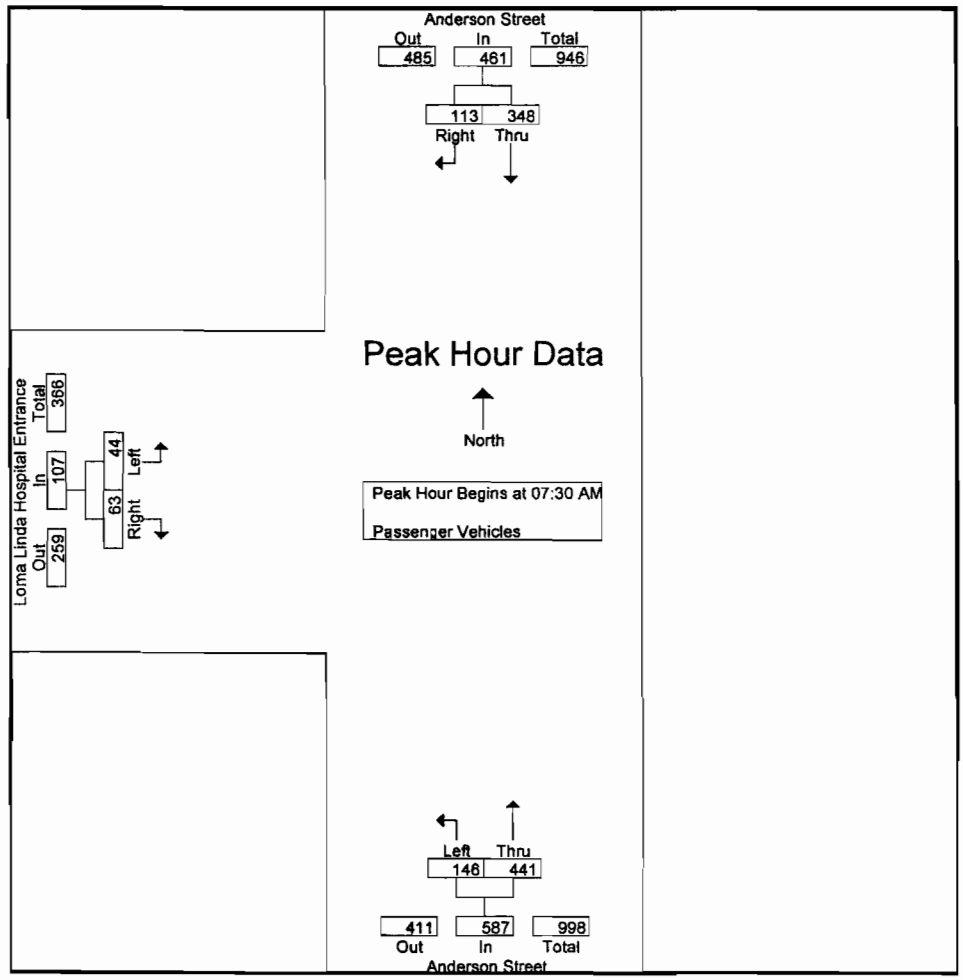

Peak Hour Analysis From 07:30 AM to 08:15 AM - Peak 1 of 1

Peak Hour for Each Approach Begins at:

	07:30 AM			07:30 AM			07:30 AM		
+0 mins.	71	17	88	33	132	165	10	**19**	29
+15 mins.	**99**	26	125	**40**	**162**	**202**	**15**	18	**33**
+30 mins.	91	**36**	**127**	34	65	99	12	9	21
+45 mins.	87	34	121	39	82	121	7	17	24
Total Volume	348	113	461	146	441	587	44	63	107
% App. Total	75.5	24.5		24.9	75.1		41.1	58.9	
PHF	.879	.785	.907	.913	.681	.726	.733	.829	.811

Counts Unlimited Inc.
PO Box 1178
Corona, CA 92878
(951) 268-6268

City of Loma Linda
N/S: Anderson Street
E/W: Loma Linda Hospital Entrance
Weather: Sunny

File Name : LMLANHOAM
Site Code : 00000001
Start Date : 10/12/2011
Page No : 1

Groups Printed- Large 2 Axle Vehicles

	Anderson Street Southbound			Anderson Street Northbound			Loma Linda Hospital Entrance Eastbound			
Start Time	Thru	Right	App. Total	Left	Thru	App. Total	Left	Right	App. Total	Int. Total
07:00 AM	0	0	0	2	0	2	0	3	3	5
07:15 AM	0	0	0	1	0	1	0	1	1	2
07:30 AM	0	1	1	1	0	1	0	3	3	5
07:45 AM	0	0	0	2	0	2	0	1	1	3
Total	0	1	1	6	0	6	0	8	8	15
08:00 AM	0	2	2	1	0	1	0	3	3	6
08:15 AM	0	0	0	2	0	2	0	2	2	4
08:30 AM	0	2	2	2	0	2	0	3	3	7
08:45 AM	0	0	0	2	0	2	0	1	1	3
Total	0	4	4	7	0	7	0	9	9	20
Grand Total	0	5	5	13	0	13	0	17	17	35
Apprch %	0	100		100	0		0	100		
Total %	0	14.3	14.3	37.1	0	37.1	0	48.6	48.6	

	Anderson Street Southbound			Anderson Street Northbound			Loma Linda Hospital Entrance Eastbound			
Start Time	Thru	Right	App. Total	Left	Thru	App. Total	Left	Right	App. Total	Int. Total
Peak Hour Analysis From 07:30 AM to 08:15 AM - Peak 1 of 1										
Peak Hour for Entire Intersection Begins at 07:30 AM										
07:30 AM	0	1	1	1	0	1	0	3	3	5
07:45 AM	0	0	0	2	0	2	0	1	1	3
08:00 AM	0	2	2	1	0	1	0	3	3	6
08:15 AM	0	0	0	2	0	2	0	2	2	4
Total Volume	0	3	3	6	0	6	0	9	9	18
% App. Total	0	100		100	0		0	100		
PHF	.000	.375	.375	.750	.000	.750	.000	.750	.750	.750

Counts Unlimited Inc.
PO Box 1178
Corona, CA 92878
(951) 268-6268

City of Loma Linda
N/S: Anderson Street
E/W: Loma Linda Hospital Entrance
Weather: Sunny

File Name : LMLANHOAM
Site Code : 00000001
Start Date : 10/12/2011
Page No : 2

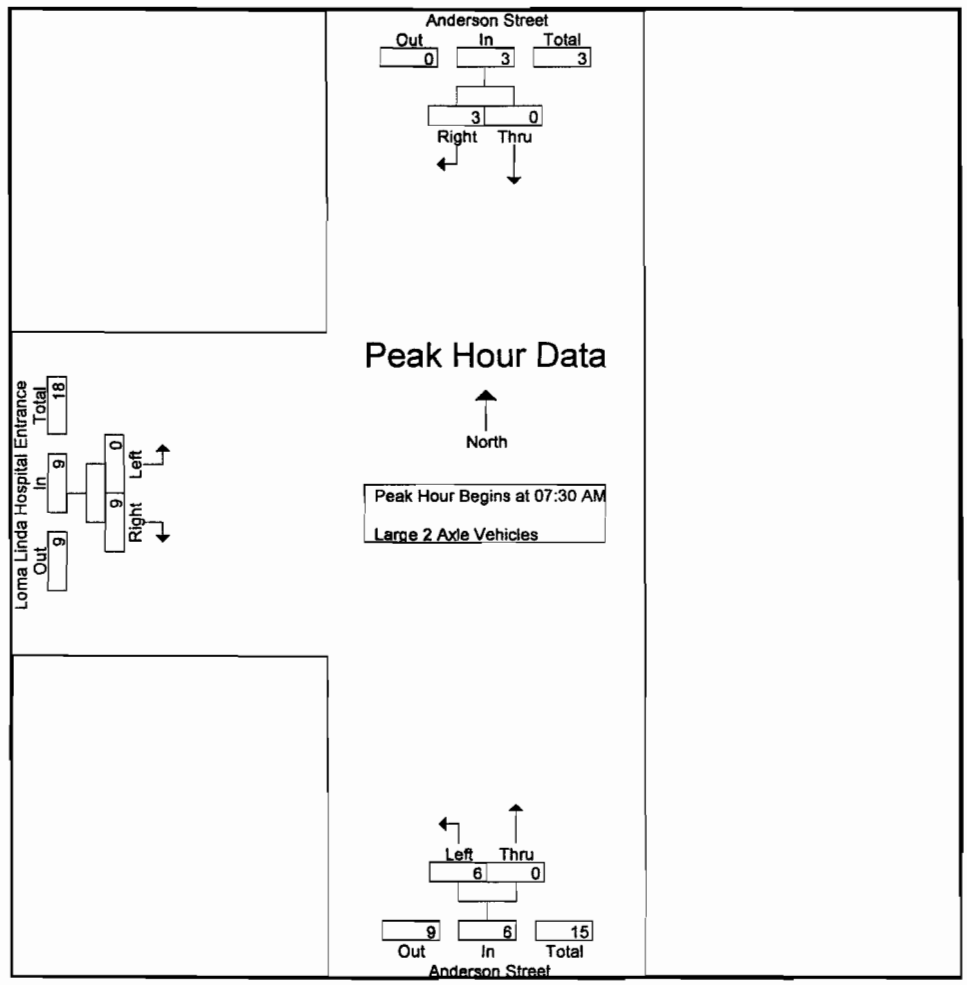

Peak Hour Analysis From 07:30 AM to 08:15 AM - Peak 1 of 1

Peak Hour for Each Approach Begins at:

	07:30 AM			07:30 AM			07:30 AM		
+0 mins.	0	1	1	1	0	1	0	3	3
+15 mins.	0	0	0	2	0	2	0	1	1
+30 mins.	0	2	2	1	0	1	0	3	3
+45 mins.	0	0	0	2	0	2	0	2	2
Total Volume	0	3	3	6	0	6	0	9	9
% App. Total	0	100		100	0		0	100	
PHF	.000	.375	.375	.750	.000	.750	.000	.750	.750

Counts Unlimited Inc.
PO Box 1178
Corona, CA 92878
(951) 268-6268

City of Loma Linda
N/S: Anderson Street
E/W: Loma Linda Hospital Entrance
Weather: Sunny

File Name : LMLANHOAM
Site Code : 00000001
Start Date : 10/12/2011
Page No : 1

Groups Printed- 3 Axle Vehicles

	Anderson Street Southbound			Anderson Street Northbound			Loma Linda Hospital Entrance Eastbound			
Start Time	Thru	Right	App. Total	Left	Thru	App. Total	Left	Right	App. Total	Int. Total
07:00 AM	0	0	0	0	0	0	0	0	0	0
07:15 AM	1	0	1	0	0	0	0	0	0	1
07:30 AM	0	0	0	0	1	1	0	0	0	1
07:45 AM	0	0	0	0	0	0	0	0	0	0
Total	1	0	1	0	1	1	0	0	0	2
08:00 AM	0	0	0	0	1	1	0	0	0	1
08:15 AM	0	0	0	0	0	0	0	0	0	0
08:30 AM	0	0	0	0	0	0	0	0	0	0
08:45 AM	0	0	0	0	0	0	0	0	0	0
Total	0	0	0	0	1	1	0	0	0	1
Grand Total	1	0	1	0	2	2	0	0	0	3
Apprch %	100	0		0	100		0	0		
Total %	33.3	0	33.3	0	66.7	66.7	0	0	0	

	Anderson Street Southbound			Anderson Street Northbound			Loma Linda Hospital Entrance Eastbound			
Start Time	Thru	Right	App. Total	Left	Thru	App. Total	Left	Right	App. Total	Int. Total
Peak Hour Analysis From 07:30 AM to 08:15 AM - Peak 1 of 1										
Peak Hour for Entire Intersection Begins at 07:30 AM										
07:30 AM	0	0	0	0	1	1	0	0	0	1
07:45 AM	0	0	0	0	0	0	0	0	0	0
08:00 AM	0	0	0	0	1	1	0	0	0	1
08:15 AM	0	0	0	0	0	0	0	0	0	0
Total Volume	0	0	0	0	2	2	0	0	0	2
% App. Total	0	0		0	100		0	0		
PHF	.000	.000	.000	.000	.500	.500	.000	.000	.000	.500

Counts Unlimited Inc.
PO Box 1178
Corona, CA 92878
(951) 268-6268

City of Loma Linda
N/S: Anderson Street
E/W: Loma Linda Hospital Entrance
Weather: Sunny

File Name : LMLANHOAM
Site Code : 00000001
Start Date : 10/12/2011
Page No : 2

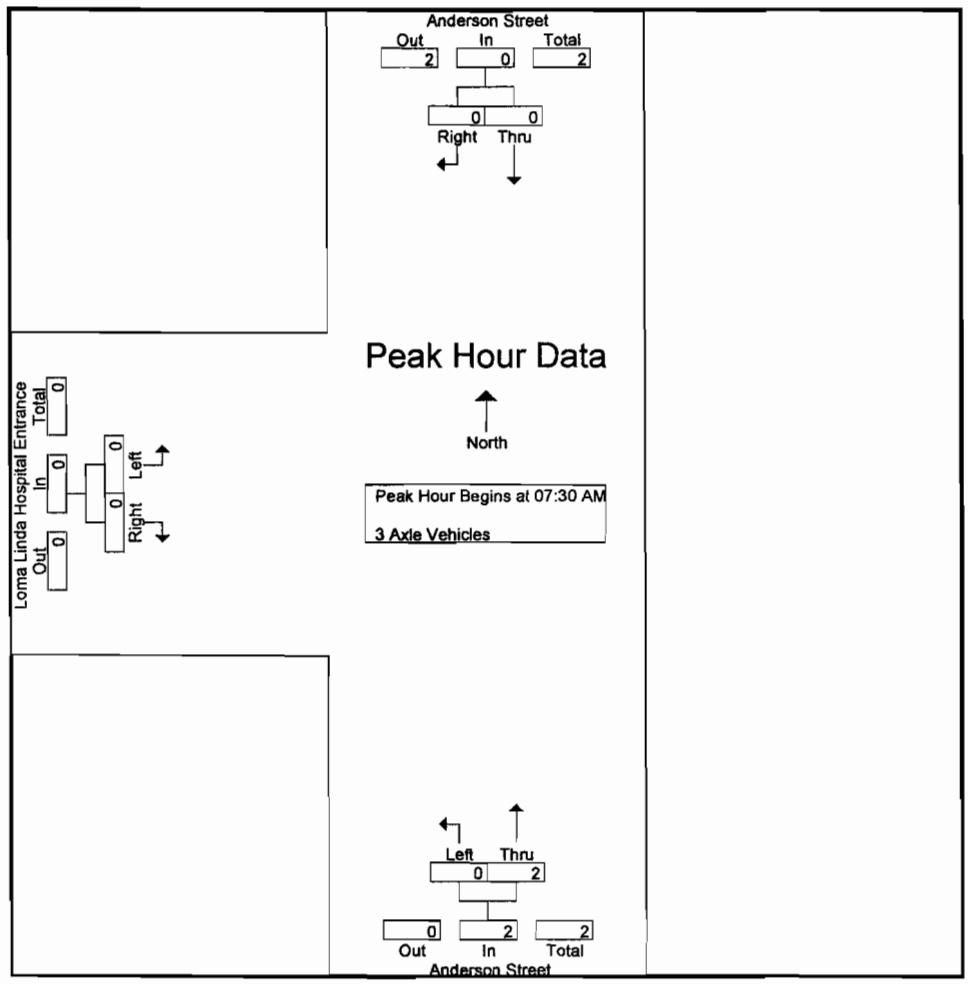

Peak Hour Analysis From 07:30 AM to 08:15 AM - Peak 1 of 1

Peak Hour for Each Approach Begins at:

	07:30 AM			07:30 AM			07:30 AM		
+0 mins.	0	0	0	0	1	1	0	0	0
+15 mins.	0	0	0	0	0	0	0	0	0
+30 mins.	0	0	0	0	1	1	0	0	0
+45 mins.	0	0	0	0	0	0	0	0	0
Total Volume	0	0	0	0	2	2	0	0	0
% App. Total	0	0		0	100		0	0	
PHF	.000	.000	.000	.000	.500	.500	.000	.000	.000

Counts Unlimited Inc.
PO Box 1178
Corona, CA 92878
(951) 268-6268

City of Loma Linda
N/S: Anderson Street
E/W: Loma Linda Hospital Entrance
Weather: Sunny

File Name : LMLANHOAM
Site Code : 00000001
Start Date : 10/12/2011
Page No : 1

Groups Printed- 4+ Axle Trucks

	Anderson Street Southbound			Anderson Street Northbound			Loma Linda Hospital Entrance Eastbound			
Start Time	Thru	Right	App. Total	Left	Thru	App. Total	Left	Right	App. Total	Int. Total
07:00 AM	0	0	0	0	0	0	0	0	0	0
07:15 AM	1	0	1	0	0	0	0	0	0	1
07:30 AM	0	0	0	0	0	0	0	0	0	0
07:45 AM	0	0	0	0	0	0	0	0	0	0
Total	1	0	1	0	0	0	0	0	0	1
08:00 AM	0	0	0	0	1	1	0	0	0	1
08:15 AM	0	0	0	0	1	1	0	0	0	1
08:30 AM	0	0	0	0	0	0	0	0	0	0
08:45 AM	0	0	0	0	1	1	0	0	0	1
Total	0	0	0	0	3	3	0	0	0	3
Grand Total	1	0	1	0	3	3	0	0	0	4
Apprch %	100	0		0	100		0	0		
Total %	25	0	25	0	75	75	0	0	0	

	Anderson Street Southbound			Anderson Street Northbound			Loma Linda Hospital Entrance Eastbound			
Start Time	Thru	Right	App. Total	Left	Thru	App. Total	Left	Right	App. Total	Int. Total
Peak Hour Analysis From 07:30 AM to 08:15 AM - Peak 1 of 1										
Peak Hour for Entire Intersection Begins at 07:30 AM										
07:30 AM	0	0	0	0	0	0	0	0	0	0
07:45 AM	0	0	0	0	0	0	0	0	0	0
08:00 AM	0	0	0	0	1	1	0	0	0	1
08:15 AM	0	0	0	0	1	1	0	0	0	1
Total Volume	0	0	0	0	2	2	0	0	0	2
% App. Total	0	0		0	100		0	0		
PHF	.000	.000	.000	.000	.500	.500	.000	.000	.000	.500

Counts Unlimited Inc.
PO Box 1178
Corona, CA 92878
(951) 268-6268

City of Loma Linda
N/S: Anderson Street
E/W: Loma Linda Hospital Entrance
Weather: Sunny

File Name : LMLANHOAM
Site Code : 00000001
Start Date : 10/12/2011
Page No : 2

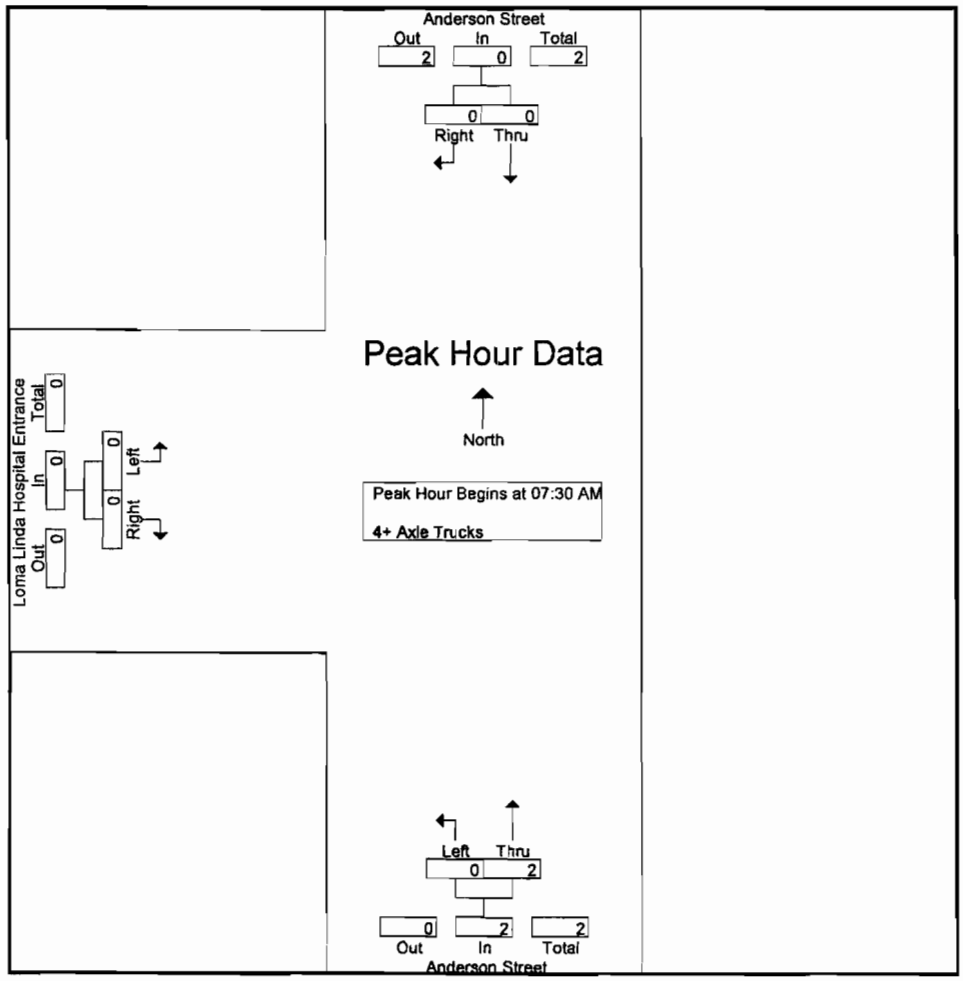

Peak Hour Analysis From 07:30 AM to 08:15 AM - Peak 1 of 1

Peak Hour for Each Approach Begins at:

	07:30 AM			07:30 AM			07:30 AM		
+0 mins.	0	0	0	0	0	0	0	0	0
+15 mins.	0	0	0	0	0	0	0	0	0
+30 mins.	0	0	0	0	1	1	0	0	0
+45 mins.	0	0	0	0	1	1	0	0	0
Total Volume	0	0	0	0	2	2	0	0	0
% App. Total	0	0		0	100		0	0	
PHF	.000	.000	.000	.000	.500	.500	.000	.000	.000

Counts Unlimited Inc.
PO Box 1178
Corona, CA 92878
(951) 268-6268

City of Loma Linda
N/S: Anderson Street
E/W: Loma Linda Hospital Entrance
Weather: Sunny Sunny

File Name : LMLANHOPM
Site Code : 00000001
Start Date : 10/12/2011
Page No : 1

Groups Printed- Passenger Vehicles - Large 2 Axle Vehicles - 3 Axle Vehicles - 4+ Axle Trucks

	Anderson Street Southbound			Anderson Street Northbound			Loma Linda Hospital Entrance Eastbound			
Start Time	Thru	Right	App. Total	Left	Thru	App. Total	Left	Right	App. Total	Int. Total
04:00 PM	98	27	125	24	79	103	39	28	67	295
04:15 PM	83	19	102	20	94	114	24	23	47	263
04:30 PM	134	25	159	14	82	96	24	25	49	304
04:45 PM	116	24	140	33	88	121	28	26	54	315
Total	431	95	526	91	343	434	115	102	217	1177
05:00 PM	135	19	154	29	96	125	25	32	57	336
05:15 PM	143	21	164	21	89	110	28	18	46	320
05:30 PM	91	27	118	39	75	114	23	19	42	274
05:45 PM	95	33	128	30	87	117	21	21	42	287
Total	464	100	564	119	347	466	97	90	187	1217
Grand Total	895	195	1090	210	690	900	212	192	404	2394
Apprch %	82.1	17.9		23.3	76.7		52.5	47.5		
Total %	37.4	8.1	45.5	8.8	28.8	37.6	8.9	8	16.9	
Passenger Vehicles	882	195	1077	193	690	883	212	177	389	2349
% Passenger Vehicles	98.5	100	98.8	91.9	100	98.1	100	92.2	96.3	98.1
Large 2 Axle Vehicles	10	0	10	17	0	17	0	15	15	42
% Large 2 Axle Vehicles	1.1	0	0.9	8.1	0	1.9	0	7.8	3.7	1.8
3 Axle Vehicles	1	0	1	0	0	0	0	0	0	1
% 3 Axle Vehicles	0.1	0	0.1	0	0	0	0	0	0	0
4+ Axle Trucks	2	0	2	0	0	0	0	0	0	2
% 4+ Axle Trucks	0.2	0	0.2	0	0	0	0	0	0	0.1

	Anderson Street Southbound			Anderson Street Northbound			Loma Linda Hospital Entrance Eastbound			
Start Time	Thru	Right	App. Total	Left	Thru	App. Total	Left	Right	App. Total	Int. Total
Peak Hour Analysis From 04:00 PM to 05:45 PM - Peak 1 of 1										
Peak Hour for Entire Intersection Begins at 04:30 PM										
04:30 PM	134	**25**	159	**14**	82	96	24	25	49	304
04:45 PM	116	24	140	**33**	88	121	**28**	26	54	315
05:00 PM	135	19	154	29	**96**	**125**	25	**32**	**57**	**336**
05:15 PM	**143**	21	**164**	21	89	110	28	18	46	320
Total Volume	528	89	617	97	355	452	105	101	206	1275
% App. Total	85.6	14.4		21.5	78.5		51	49		
PHF	.923	.890	.941	.735	.924	.904	.938	.789	.904	.949

Counts Unlimited Inc.
PO Box 1178
Corona, CA 92878
(951) 268-6268

City of Loma Linda
N/S: Anderson Street
E/W: Loma Linda Hospital Entrance
Weather: Sunny Sunny

File Name : LMLANHOPM
Site Code : 00000001
Start Date : 10/12/2011
Page No : 2

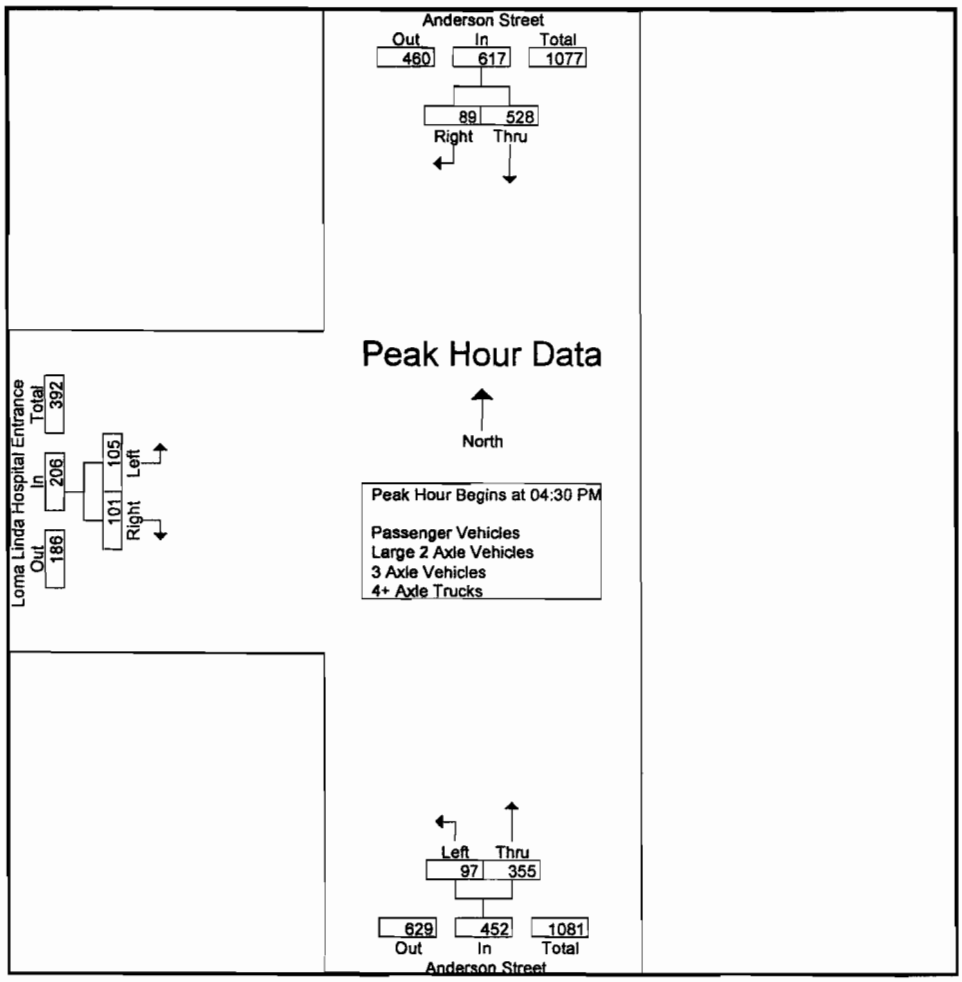

Peak Hour Analysis From 04:00 PM to 05:45 PM - Peak 1 of 1

Peak Hour for Each Approach Begins at:

	04:30 PM			04:45 PM			04:00 PM		
+0 mins.	134	**25**	159	33	88	121	**39**	**28**	**67**
+15 mins.	116	24	140	29	**96**	**125**	24	23	47
+30 mins.	135	19	154	21	89	110	24	25	49
+45 mins.	**143**	21	**164**	**39**	75	114	28	26	54
Total Volume	528	89	617	122	348	470	115	102	217
% App. Total	85.6	14.4		26	74		53	47	
PHF	.923	.890	.941	.782	.906	.940	.737	.911	.810

Counts Unlimited Inc.
PO Box 1178
Corona, CA 92878
(951) 268-6268

City of Loma Linda
N/S: Anderson Street
E/W: Loma Linda Hospital Entrance
Weather: Sunny Sunny

File Name : LMLANHOPM
Site Code : 00000001
Start Date : 10/12/2011
Page No : 1

Groups Printed- Passenger Vehicles

	Anderson Street Southbound			Anderson Street Northbound			Loma Linda Hospital Entrance Eastbound			
Start Time	Thru	Right	App. Total	Left	Thru	App. Total	Left	Right	App. Total	Int. Total
04:00 PM	97	27	124	22	79	101	39	26	65	290
04:15 PM	83	19	102	18	94	112	24	21	45	259
04:30 PM	130	25	155	12	82	94	24	23	47	296
04:45 PM	114	24	138	31	88	119	28	24	52	309
Total	424	95	519	83	343	426	115	94	209	1154
05:00 PM	134	19	153	27	96	123	25	31	56	332
05:15 PM	140	21	161	20	89	109	28	16	44	314
05:30 PM	90	27	117	35	75	110	23	17	40	267
05:45 PM	94	33	127	28	87	115	21	19	40	282
Total	458	100	558	110	347	457	97	83	180	1195
Grand Total	882	195	1077	193	690	883	212	177	389	2349
Apprch %	81.9	18.1		21.9	78.1		54.5	45.5		
Total %	37.5	8.3	45.8	8.2	29.4	37.6	9	7.5	16.6	

	Anderson Street Southbound			Anderson Street Northbound			Loma Linda Hospital Entrance Eastbound			
Start Time	Thru	Right	App. Total	Left	Thru	App. Total	Left	Right	App. Total	Int. Total
Peak Hour Analysis From 04:30 PM to 05:15 PM - Peak 1 of 1										
Peak Hour for Entire Intersection Begins at 04:30 PM										
04:30 PM	130	**25**	155	12	82	94	24	23	47	296
04:45 PM	114	24	138	**31**	88	119	**28**	24	52	309
05:00 PM	134	19	153	27	**96**	**123**	25	**31**	**56**	**332**
05:15 PM	**140**	21	**161**	20	89	109	28	16	44	314
Total Volume	518	89	607	90	355	445	105	94	199	1251
% App. Total	85.3	14.7		20.2	79.8		52.8	47.2		
PHF	.925	.890	.943	.726	.924	.904	.938	.758	.888	.942

Counts Unlimited Inc.
PO Box 1178
Corona, CA 92878
(951) 268-6268

City of Loma Linda
N/S: Anderson Street
E/W: Loma Linda Hospital Entrance
Weather: Sunny Sunny

File Name : LMLANHOPM
Site Code : 00000001
Start Date : 10/12/2011
Page No : 2

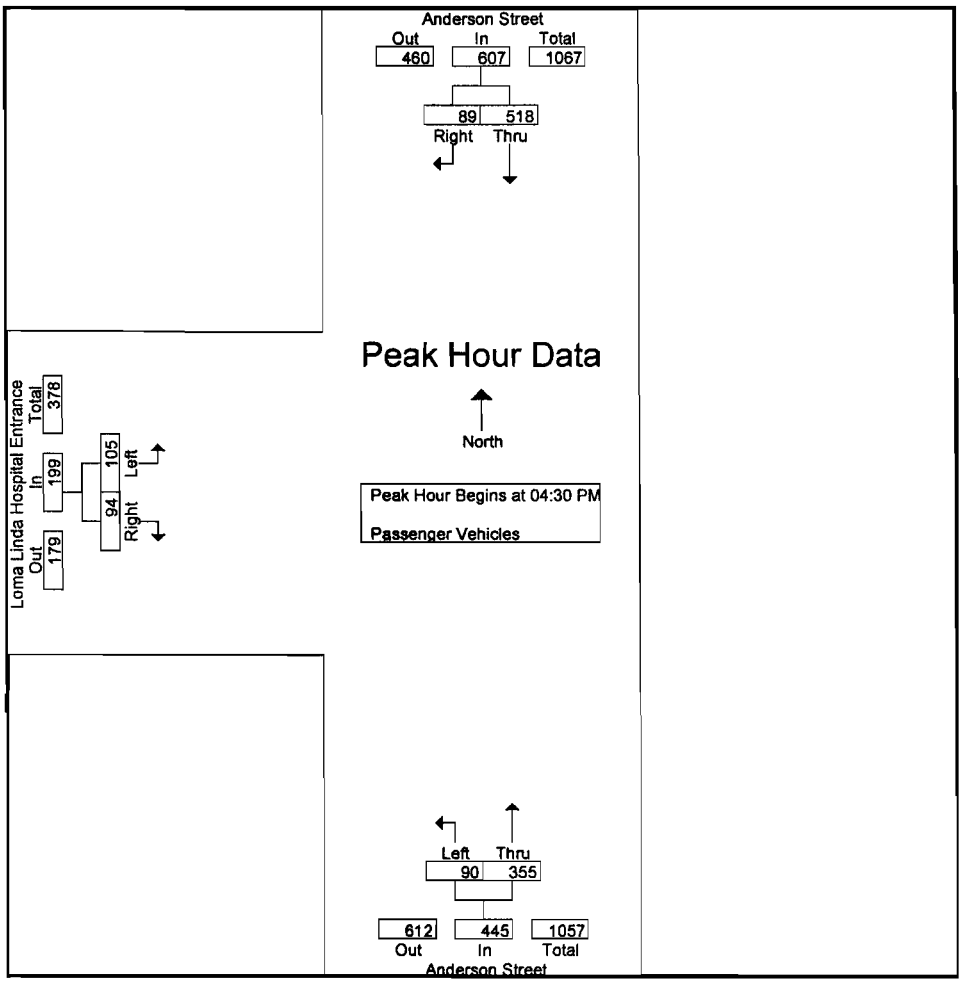

Peak Hour Analysis From 04:30 PM to 05:15 PM - Peak 1 of 1

Peak Hour for Each Approach Begins at:

	04:30 PM			04:30 PM			04:30 PM		
+0 mins.	130	25	155	12	82	94	24	23	47
+15 mins.	114	24	138	**31**	88	119	**28**	24	52
+30 mins.	134	19	153	27	**96**	**123**	25	**31**	**56**
+45 mins.	**140**	21	**161**	20	89	109	28	16	44
Total Volume	518	89	607	90	355	445	105	94	199
% App. Total	85.3	14.7		20.2	79.8		52.8	47.2	
PHF	.925	.890	.943	.726	.924	.904	.938	.758	.888

Counts Unlimited Inc.
PO Box 1178
Corona, CA 92878
(951) 268-6268

City of Loma Linda
N/S: Anderson Street
E/W: Loma Linda Hospital Entrance
Weather: Sunny Sunny

File Name : LMLANHOPM
Site Code : 00000001
Start Date : 10/12/2011
Page No : 1

Groups Printed- Large 2 Axle Vehicles

	Anderson Street Southbound			Anderson Street Northbound			Loma Linda Hospital Entrance Eastbound			
Start Time	Thru	Right	App. Total	Left	Thru	App. Total	Left	Right	App. Total	Int. Total
04:00 PM	1	0	1	2	0	2	0	2	2	5
04:15 PM	0	0	0	2	0	2	0	2	2	4
04:30 PM	2	0	2	2	0	2	0	2	2	6
04:45 PM	2	0	2	2	0	2	0	2	2	6
Total	5	0	5	8	0	8	0	8	8	21
05:00 PM	0	0	0	2	0	2	0	1	1	3
05:15 PM	3	0	3	1	0	1	0	2	2	6
05:30 PM	1	0	1	4	0	4	0	2	2	7
05:45 PM	1	0	1	2	0	2	0	2	2	5
Total	5	0	5	9	0	9	0	7	7	21
Grand Total	10	0	10	17	0	17	0	15	15	42
Apprch %	100	0		100	0		0	100		
Total %	23.8	0	23.8	40.5	0	40.5	0	35.7	35.7	

	Anderson Street Southbound			Anderson Street Northbound			Loma Linda Hospital Entrance Eastbound			
Start Time	Thru	Right	App. Total	Left	Thru	App. Total	Left	Right	App. Total	Int. Total
Peak Hour Analysis From 04:30 PM to 05:15 PM - Peak 1 of 1										
Peak Hour for Entire Intersection Begins at 04:30 PM										
04:30 PM	2	0	2	2	0	2	0	2	2	6
04:45 PM	2	0	2	2	0	2	0	2	2	6
05:00 PM	0	0	0	2	0	2	0	1	1	3
05:15 PM	3	0	3	1	0	1	0	2	2	6
Total Volume	7	0	7	7	0	7	0	7	7	21
% App. Total	100	0		100	0		0	100		
PHF	.583	.000	.583	.875	.000	.875	.000	.875	.875	.875

Counts Unlimited Inc.
PO Box 1178
Corona, CA 92878
(951) 268-6268

City of Loma Linda
N/S: Anderson Street
E/W: Loma Linda Hospital Entrance
Weather: Sunny Sunny

File Name : LMLANHOPM
Site Code : 00000001
Start Date : 10/12/2011
Page No : 2

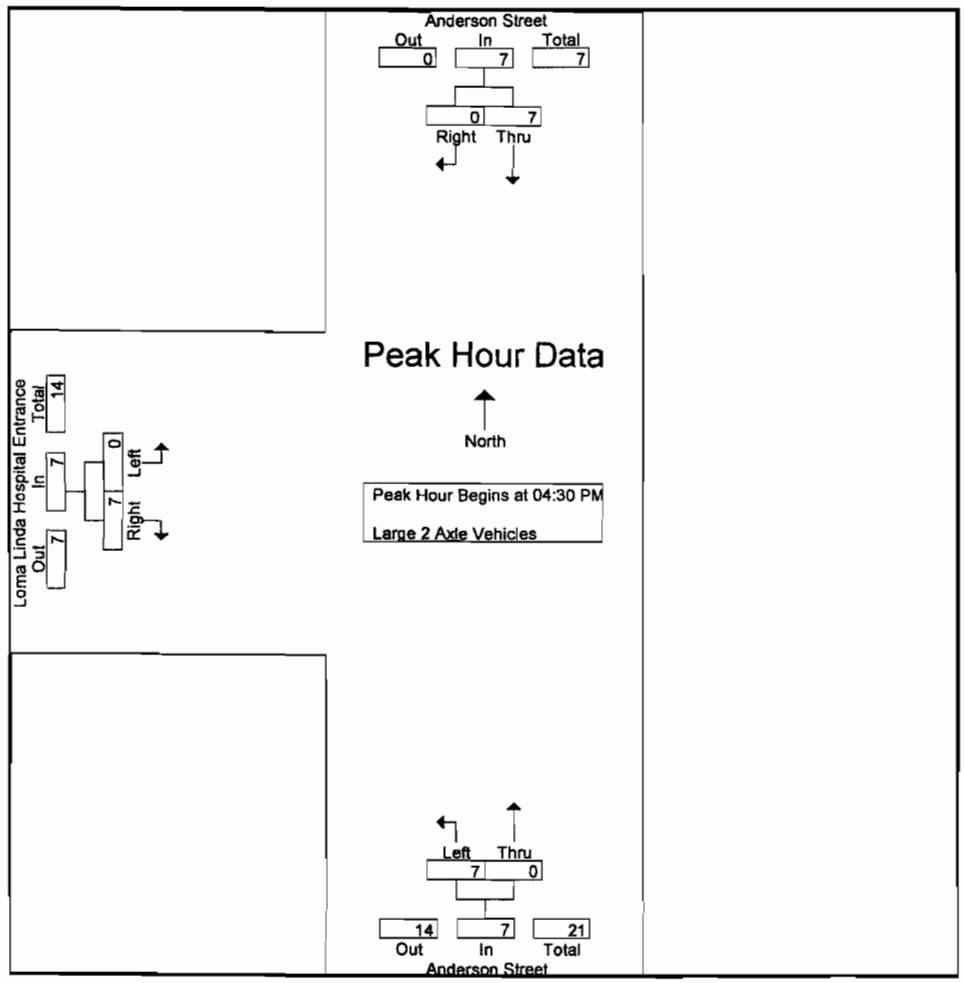

Peak Hour Analysis From 04:30 PM to 05:15 PM - Peak 1 of 1

Peak Hour for Each Approach Begins at:

	04:30 PM			04:30 PM			04:30 PM		
+0 mins.	2	0	2	2	0	2	0	2	2
+15 mins.	2	0	2	2	0	2	0	2	2
+30 mins.	0	0	0	2	0	2	0	1	1
+45 mins.	3	0	3	1	0	1	0	2	2
Total Volume	7	0	7	7	0	7	0	7	7
% App. Total	100	0		100	0		0	100	
PHF	.583	.000	.583	.875	.000	.875	.000	.875	.875

Counts Unlimited Inc.
PO Box 1178
Corona, CA 92878
(951) 268-6268

City of Loma Linda
N/S: Anderson Street
E/W: Loma Linda Hospital Entrance
Weather: Sunny Sunny

File Name : LMLANHOPM
Site Code : 00000001
Start Date : 10/12/2011
Page No : 1

Groups Printed- 3 Axle Vehicles

	Anderson Street Southbound			Anderson Street Northbound			Loma Linda Hospital Entrance Eastbound			
Start Time	Thru	Right	App. Total	Left	Thru	App. Total	Left	Right	App. Total	Int. Total
04:00 PM	0	0	0	0	0	0	0	0	0	0
04:15 PM	0	0	0	0	0	0	0	0	0	0
04:30 PM	0	0	0	0	0	0	0	0	0	0
04:45 PM	0	0	0	0	0	0	0	0	0	0
Total	0	0	0	0	0	0	0	0	0	0
05:00 PM	1	0	1	0	0	0	0	0	0	1
05:15 PM	0	0	0	0	0	0	0	0	0	0
05:30 PM	0	0	0	0	0	0	0	0	0	0
05:45 PM	0	0	0	0	0	0	0	0	0	0
Total	1	0	1	0	0	0	0	0	0	1
Grand Total	1	0	1	0	0	0	0	0	0	1
Apprch %	100	0		0	0		0	0		
Total %	100	0	100	0	0	0	0	0	0	

	Anderson Street Southbound			Anderson Street Northbound			Loma Linda Hospital Entrance Eastbound			
Start Time	Thru	Right	App. Total	Left	Thru	App. Total	Left	Right	App. Total	Int. Total
Peak Hour Analysis From 04:30 PM to 05:15 PM - Peak 1 of 1										
Peak Hour for Entire Intersection Begins at 04:30 PM										
04:30 PM	0	0	0	0	0	0	0	0	0	0
04:45 PM	0	0	0	0	0	0	0	0	0	0
05:00 PM	1	0	1	0	0	0	0	0	0	1
05:15 PM	0	0	0	0	0	0	0	0	0	0
Total Volume	1	0	1	0	0	0	0	0	0	1
% App. Total	100	0		0	0		0	0		
PHF	.250	.000	.250	.000	.000	.000	.000	.000	.000	.250

Counts Unlimited Inc.
PO Box 1178
Corona, CA 92878
(951) 268-6268

City of Loma Linda
N/S: Anderson Street
E/W: Loma Linda Hospital Entrance
Weather: Sunny Sunny

File Name : LMLANHOPM
Site Code : 00000001
Start Date : 10/12/2011
Page No : 2

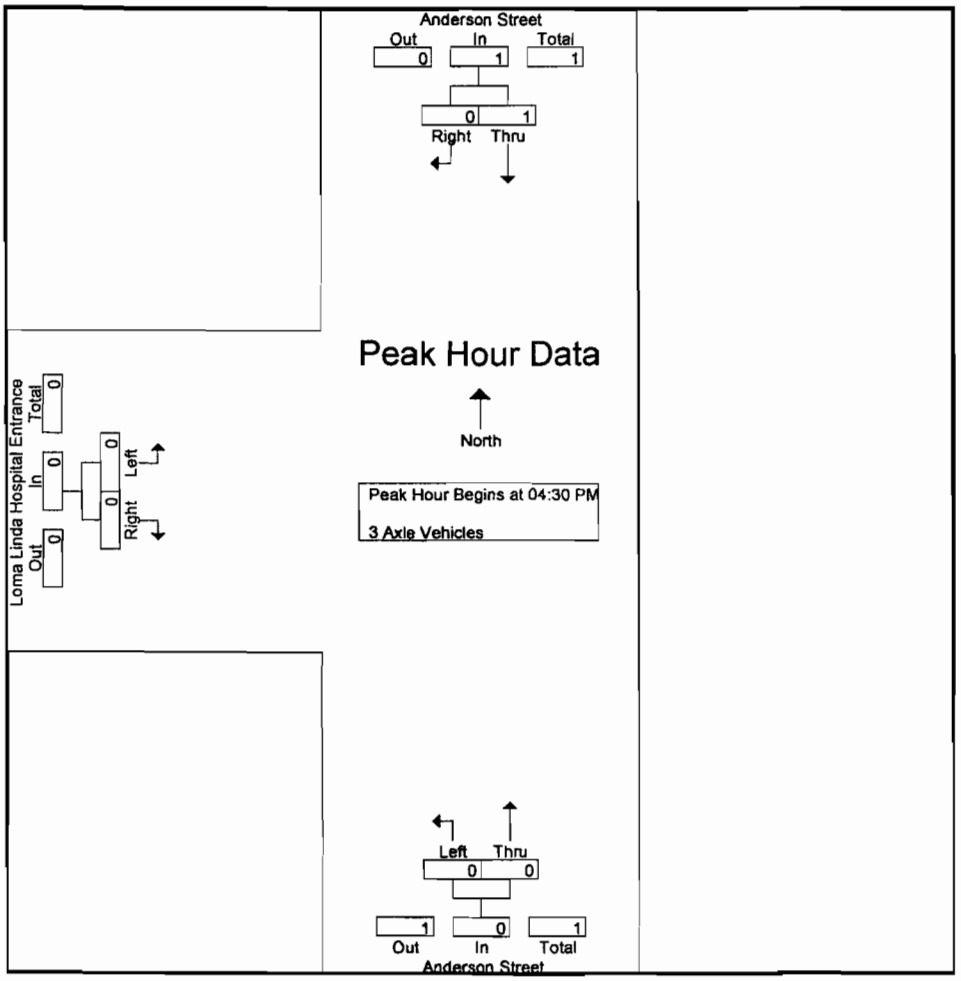

Peak Hour Analysis From 04:30 PM to 05:15 PM - Peak 1 of 1

Peak Hour for Each Approach Begins at:

	04:30 PM			04:30 PM			04:30 PM		
+0 mins.	0	0	0	0	0	0	0	0	0
+15 mins.	0	0	0	0	0	0	0	0	0
+30 mins.	1	0	1	0	0	0	0	0	0
+45 mins.	0	0	0	0	0	0	0	0	0
Total Volume	1	0	1	0	0	0	0	0	0
% App. Total	100	0		0	0		0	0	
PHF	.250	.000	.250	.000	.000	.000	.000	.000	.000

Counts Unlimited Inc.
PO Box 1178
Corona, CA 92878
(951) 268-6268

City of Loma Linda
N/S: Anderson Street
E/W: Loma Linda Hospital Entrance
Weather: Sunny Sunny

File Name : LMLANHOPM
Site Code : 00000001
Start Date : 10/12/2011
Page No : 1

Groups Printed- 4+ Axle Trucks

	Anderson Street Southbound			Anderson Street Northbound			Loma Linda Hospital Entrance Eastbound			
Start Time	Thru	Right	App. Total	Left	Thru	App. Total	Left	Right	App. Total	Int. Total
04:00 PM	0	0	0	0	0	0	0	0	0	0
04:15 PM	0	0	0	0	0	0	0	0	0	0
04:30 PM	2	0	2	0	0	0	0	0	0	2
04:45 PM	0	0	0	0	0	0	0	0	0	0
Total	2	0	2	0	0	0	0	0	0	2
05:00 PM	0	0	0	0	0	0	0	0	0	0
05:15 PM	0	0	0	0	0	0	0	0	0	0
05:30 PM	0	0	0	0	0	0	0	0	0	0
05:45 PM	0	0	0	0	0	0	0	0	0	0
Total	0	0	0	0	0	0	0	0	0	0
Grand Total	2	0	2	0	0	0	0	0	0	2
Apprch %	100	0		0	0		0	0		
Total %	100	0	100	0	0	0	0	0	0	

	Anderson Street Southbound			Anderson Street Northbound			Loma Linda Hospital Entrance Eastbound			
Start Time	Thru	Right	App. Total	Left	Thru	App. Total	Left	Right	App. Total	Int. Total
Peak Hour Analysis From 04:30 PM to 05:15 PM - Peak 1 of 1										
Peak Hour for Entire Intersection Begins at 04:30 PM										
04:30 PM	2	0	2	0	0	0	0	0	0	2
04:45 PM	0	0	0	0	0	0	0	0	0	0
05:00 PM	0	0	0	0	0	0	0	0	0	0
05:15 PM	0	0	0	0	0	0	0	0	0	0
Total Volume	2	0	2	0	0	0	0	0	0	2
% App. Total	100	0		0	0		0	0		
PHF	.250	.000	.250	.000	.000	.000	.000	.000	.000	.250

Counts Unlimited Inc.
PO Box 1178
Corona, CA 92878
(951) 268-6268

City of Loma Linda
N/S: Anderson Street
E/W: Loma Linda Hospital Entrance
Weather: Sunny Sunny

File Name : LMLANHOPM
Site Code : 00000001
Start Date : 10/12/2011
Page No : 2

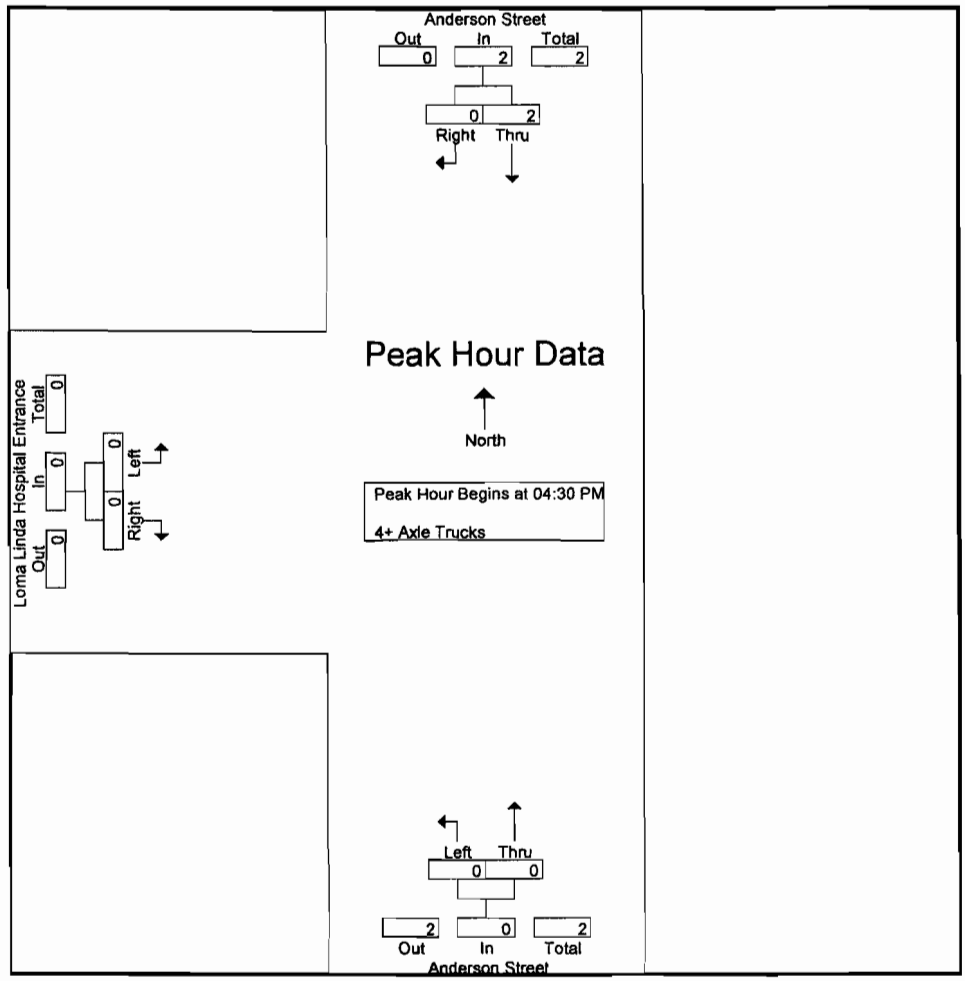

Peak Hour Analysis From 04:30 PM to 05:15 PM - Peak 1 of 1

Peak Hour for Each Approach Begins at:

	04:30 PM			04:30 PM			04:30 PM		
+0 mins.	2	0	2	0	0	0	0	0	0
+15 mins.	0	0	0	0	0	0	0	0	0
+30 mins.	0	0	0	0	0	0	0	0	0
+45 mins.	0	0	0	0	0	0	0	0	0
Total Volume	2	0	2	0	0	0	0	0	0
% App. Total	100	0		0	0		0	0	
PHF	.250	.000	.250	.000	.000	.000	.000	.000	.000

Counts Unlimited Inc.
PO Box 1178
Corona, CA 92878
(951) 268-6268

City of Loma Linda
N/S: Anderson Street
E/W: Starr Street
Weather: Sunny

File Name : LMLANSTAM
Site Code : 00000043
Start Date : 10/12/2011
Page No : 1

Groups Printed- Passenger Vehicles - Large 2 Axle Vehicles - 3 Axle Vehicles - 4 Axle Trucks

	Anderson Street Southbound			Starr Street Westbound			Anderson Street Northbound			
Start Time	Left	Thru	App. Total	Left	Right	App. Total	Thru	Right	App. Total	Int. Total
07:00 AM	2	66	68	0	1	1	70	1	71	140
07:15 AM	4	67	71	0	3	3	99	0	99	173
07:30 AM	2	94	96	1	6	7	153	3	156	259
07:45 AM	0	119	119	0	3	3	193	6	199	321
Total	8	346	354	1	13	14	515	10	525	893
08:00 AM	0	107	107	0	3	3	129	1	130	240
08:15 AM	2	109	111	1	1	2	123	2	125	238
08:30 AM	4	71	75	0	1	1	124	0	124	200
08:45 AM	6	97	103	1	3	4	99	3	102	209
Total	12	384	396	2	8	10	475	6	481	887
Grand Total	20	730	750	3	21	24	990	16	1006	1780
Apprch %	2.7	97.3		12.5	87.5		98.4	1.6		
Total %	1.1	41	42.1	0.2	1.2	1.3	55.6	0.9	56.5	
Passenger Vehicles	19	695	714	3	20	23	969	16	985	1722
% Passenger Vehicles	95	95.2	95.2	100	95.2	95.8	97.9	100	97.9	96.7
Large 2 Axle Vehicles	0	34	34	0	0	0	17	0	17	51
% Large 2 Axle Vehicles	0	4.7	4.5	0	0	0	1.7	0	1.7	2.9
3 Axle Vehicles	1	0	1	0	1	1	1	0	1	3
% 3 Axle Vehicles	5	0	0.1	0	4.8	4.2	0.1	0	0.1	0.2
4 Axle Trucks	0	1	1	0	0	0	3	0	3	4
% 4 Axle Trucks	0	0.1	0.1	0	0	0	0.3	0	0.3	0.2

	Anderson Street Southbound			Starr Street Westbound			Anderson Street Northbound			
Start Time	Left	Thru	App. Total	Left	Right	App. Total	Thru	Right	App. Total	Int. Total
Peak Hour Analysis From 07:00 AM to 08:45 AM - Peak 1 of 1										
Peak Hour for Entire Intersection Begins at 07:30 AM										
07:30 AM	2	94	96	1	6	7	153	3	156	259
07:45 AM	0	119	119	0	3	3	193	6	199	321
08:00 AM	0	107	107	0	3	3	129	1	130	240
08:15 AM	2	109	111	1	1	2	123	2	125	238
Total Volume	4	429	433	2	13	15	598	12	610	1058
% App. Total	0.9	99.1		13.3	86.7		98	2		
PHF	.500	.901	.910	.500	.542	.536	.775	.500	.766	.824

Counts Unlimited Inc.
PO Box 1178
Corona, CA 92878
(951) 268-6268

City of Loma Linda
N/S: Anderson Street
E/W: Starr Street
Weather: Sunny

File Name : LMLANSTAM
Site Code : 00000043
Start Date : 10/12/2011
Page No : 2

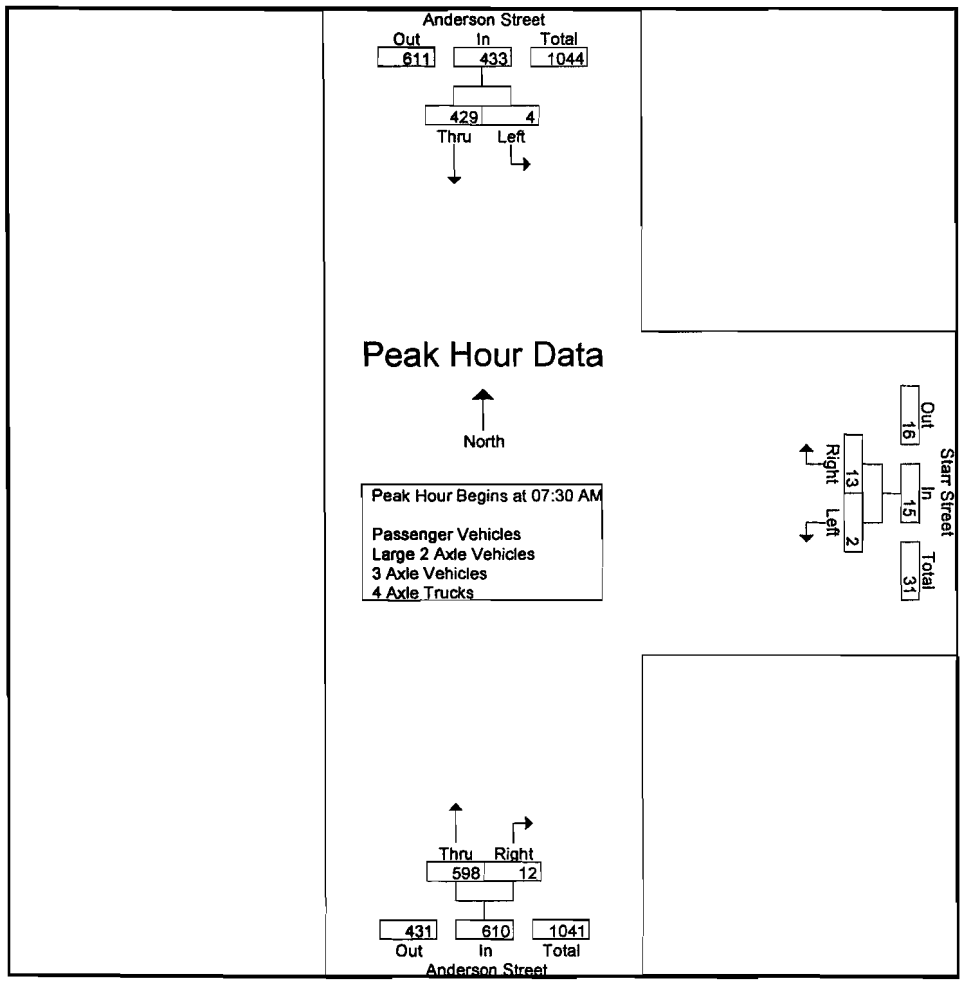

Peak Hour Analysis From 07:00 AM to 08:45 AM - Peak 1 of 1
Peak Hour for Each Approach Begins at:

	07:30 AM			07:15 AM			07:30 AM		
+0 mins.	2	94	96	0	3	3	153	3	156
+15 mins.	0	119	119	1	6	7	193	6	199
+30 mins.	0	107	107	0	3	3	129	1	130
+45 mins.	2	109	111	0	3	3	123	2	125
Total Volume	4	429	433	1	15	16	598	12	610
% App. Total	0.9	99.1		6.2	93.8		98	2	
PHF	.500	.901	.910	.250	.625	.571	.775	.500	.766

Counts Unlimited Inc.
PO Box 1178
Corona, CA 92878
(951) 268-6268

City of Loma Linda
N/S: Anderson Street
E/W: Starr Street
Weather: Sunny

File Name : LMLANSTAM
Site Code : 00000043
Start Date : 10/12/2011
Page No : 1

Groups Printed- Passenger Vehicles

	Anderson Street Southbound			Starr Street Westbound			Anderson Street Northbound			
Start Time	Left	Thru	App. Total	Left	Right	App. Total	Thru	Right	App. Total	Int. Total
07:00 AM	2	61	63	0	1	1	68	1	69	133
07:15 AM	3	64	67	0	3	3	98	0	98	168
07:30 AM	2	89	91	1	5	6	151	3	154	251
07:45 AM	0	115	115	0	3	3	191	6	197	315
Total	7	329	336	1	12	13	508	10	518	867
08:00 AM	0	102	102	0	3	3	126	1	127	232
08:15 AM	2	106	108	1	1	2	118	2	120	230
08:30 AM	4	64	68	0	1	1	121	0	121	190
08:45 AM	6	94	100	1	3	4	96	3	99	203
Total	12	366	378	2	8	10	461	6	467	855
Grand Total	19	695	714	3	20	23	969	16	985	1722
Apprch %	2.7	97.3		13	87		98.4	1.6		
Total %	1.1	40.4	41.5	0.2	1.2	1.3	56.3	0.9	57.2	

	Anderson Street Southbound			Starr Street Westbound			Anderson Street Northbound			
Start Time	Left	Thru	App. Total	Left	Right	App. Total	Thru	Right	App. Total	Int. Total
Peak Hour Analysis From 07:30 AM to 08:15 AM - Peak 1 of 1										
Peak Hour for Entire Intersection Begins at 07:30 AM										
07:30 AM	**2**	89	91	**1**	**5**	**6**	151	3	154	251
07:45 AM	0	**115**	**115**	0	3	3	**191**	**6**	**197**	**315**
08:00 AM	0	102	102	0	3	3	126	1	127	232
08:15 AM	2	106	108	1	1	2	118	2	120	230
Total Volume	4	412	416	2	12	14	586	12	598	1028
% App. Total	1	99		14.3	85.7		98	2		
PHF	.500	.896	.904	.500	.600	.583	.767	.500	.759	.816

Counts Unlimited Inc.
PO Box 1178
Corona, CA 92878
(951) 268-6268

City of Loma Linda
N/S: Anderson Street
E/W: Starr Street
Weather: Sunny

File Name : LMLANSTAM
Site Code : 00000043
Start Date : 10/12/2011
Page No : 2

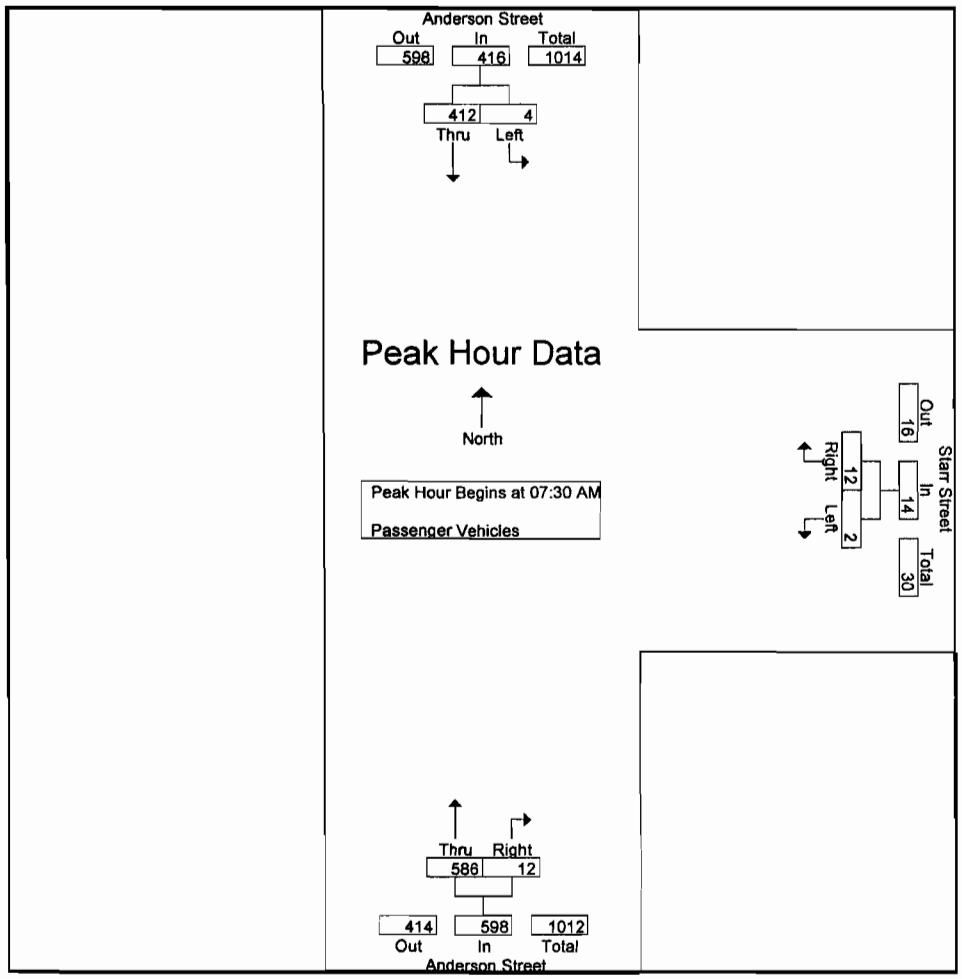

Peak Hour Analysis From 07:30 AM to 08:15 AM - Peak 1 of 1
Peak Hour for Each Approach Begins at:

	07:30 AM			07:30 AM			07:30 AM		
+0 mins.	**2**	89	91	**1**	**5**	**6**	151	3	154
+15 mins.	0	**115**	**115**	0	3	3	**191**	**6**	**197**
+30 mins.	0	102	102	0	3	3	126	1	127
+45 mins.	2	106	108	1	1	2	118	2	120
Total Volume	4	412	416	2	12	14	586	12	598
% App. Total	1	99		14.3	85.7		98	2	
PHF	.500	.896	.904	.500	.600	.583	.767	.500	.759

Counts Unlimited Inc.
PO Box 1178
Corona, CA 92878
(951) 268-6268

City of Loma Linda
N/S: Anderson Street
E/W: Starr Street
Weather: Sunny

File Name : LMLANSTAM
Site Code : 00000043
Start Date : 10/12/2011
Page No : 1

Groups Printed- Large 2 Axle Vehicles

	Anderson Street Southbound			Starr Street Westbound			Anderson Street Northbound			
Start Time	Left	Thru	App. Total	Left	Right	App. Total	Thru	Right	App. Total	Int. Total
07:00 AM	0	5	5	0	0	0	2	0	2	7
07:15 AM	0	2	2	0	0	0	1	0	1	3
07:30 AM	0	5	5	0	0	0	2	0	2	7
07:45 AM	0	4	4	0	0	0	2	0	2	6
Total	0	16	16	0	0	0	7	0	7	23
08:00 AM	0	5	5	0	0	0	1	0	1	6
08:15 AM	0	3	3	0	0	0	4	0	4	7
08:30 AM	0	7	7	0	0	0	3	0	3	10
08:45 AM	0	3	3	0	0	0	2	0	2	5
Total	0	18	18	0	0	0	10	0	10	28
Grand Total	0	34	34	0	0	0	17	0	17	51
Apprch %	0	100		0	0		100	0		
Total %	0	66.7	66.7	0	0	0	33.3	0	33.3	

	Anderson Street Southbound			Starr Street Westbound			Anderson Street Northbound			
Start Time	Left	Thru	App. Total	Left	Right	App. Total	Thru	Right	App. Total	Int. Total
Peak Hour Analysis From 07:30 AM to 08:15 AM - Peak 1 of 1										
Peak Hour for Entire Intersection Begins at 07:30 AM										
07:30 AM	0	**5**	**5**	0	0	0	2	0	2	**7**
07:45 AM	0	4	4	0	0	0	2	0	2	6
08:00 AM	0	5	5	0	0	0	1	0	1	6
08:15 AM	0	3	3	0	0	0	**4**	0	**4**	7
Total Volume	0	17	17	0	0	0	9	0	9	26
% App. Total	0	100		0	0		100	0		
PHF	.000	.850	.850	.000	.000	.000	.563	.000	.563	.929

Counts Unlimited Inc.
PO Box 1178
Corona, CA 92878
(951) 268-6268

City of Loma Linda
N/S: Anderson Street
E/W: Starr Street
Weather: Sunny

File Name : LMLANSTAM
Site Code : 00000043
Start Date : 10/12/2011
Page No : 2

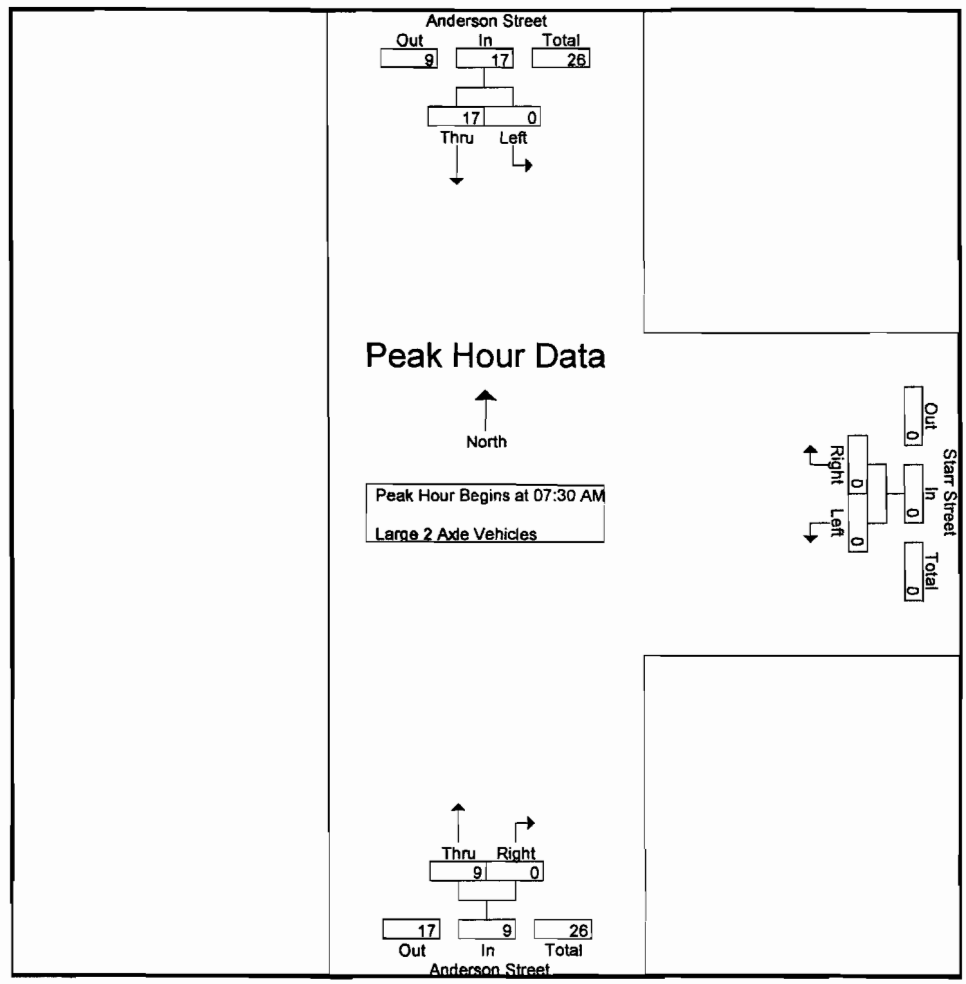

Peak Hour Analysis From 07:30 AM to 08:15 AM - Peak 1 of 1
Peak Hour for Each Approach Begins at:

	07:30 AM			07:30 AM			07:30 AM		
+0 mins.	0	5	5	0	0	0	2	0	2
+15 mins.	0	4	4	0	0	0	2	0	2
+30 mins.	0	5	5	0	0	0	1	0	1
+45 mins.	0	3	3	0	0	0	4	0	4
Total Volume	0	17	17	0	0	0	9	0	9
% App. Total	0	100		0	0		100	0	
PHF	.000	.850	.850	.000	.000	.000	.563	.000	.563

Counts Unlimited Inc.
PO Box 1178
Corona, CA 92878
(951) 268-6268

City of Loma Linda
N/S: Anderson Street
E/W: Starr Street
Weather: Sunny

File Name : LMLANSTAM
Site Code : 00000043
Start Date : 10/12/2011
Page No : 1

Groups Printed- 3 Axle Vehicles

	Anderson Street Southbound			Starr Street Westbound			Anderson Street Northbound			
Start Time	Left	Thru	App. Total	Left	Right	App. Total	Thru	Right	App. Total	Int. Total
07:00 AM	0	0	0	0	0	0	0	0	0	0
07:15 AM	1	0	1	0	0	0	0	0	0	1
07:30 AM	0	0	0	0	1	1	0	0	0	1
07:45 AM	0	0	0	0	0	0	0	0	0	0
Total	1	0	1	0	1	1	0	0	0	2
08:00 AM	0	0	0	0	0	0	1	0	1	1
08:15 AM	0	0	0	0	0	0	0	0	0	0
08:30 AM	0	0	0	0	0	0	0	0	0	0
08:45 AM	0	0	0	0	0	0	0	0	0	0
Total	0	0	0	0	0	0	1	0	1	1
Grand Total	1	0	1	0	1	1	1	0	1	3
Apprch %	100	0		0	100		100	0		
Total %	33.3	0	33.3	0	33.3	33.3	33.3	0	33.3	

	Anderson Street Southbound			Starr Street Westbound			Anderson Street Northbound			
Start Time	Left	Thru	App. Total	Left	Right	App. Total	Thru	Right	App. Total	Int. Total
Peak Hour Analysis From 07:30 AM to 08:15 AM - Peak 1 of 1										
Peak Hour for Entire Intersection Begins at 07:30 AM										
07:30 AM	0	0	0	0	**1**	**1**	0	0	0	**1**
07:45 AM	0	0	0	0	0	0	0	0	0	0
08:00 AM	0	0	0	0	0	0	**1**	0	**1**	1
08:15 AM	0	0	0	0	0	0	0	0	0	0
Total Volume	0	0	0	0	1	1	1	0	1	2
% App. Total	0	0		0	100		100	0		
PHF	.000	.000	.000	.000	.250	.250	.250	.000	.250	.500

Counts Unlimited Inc.
PO Box 1178
Corona, CA 92878
(951) 268-6268

City of Loma Linda
N/S: Anderson Street
E/W: Starr Street
Weather: Sunny

File Name : LMLANSTAM
Site Code : 00000043
Start Date : 10/12/2011
Page No : 2

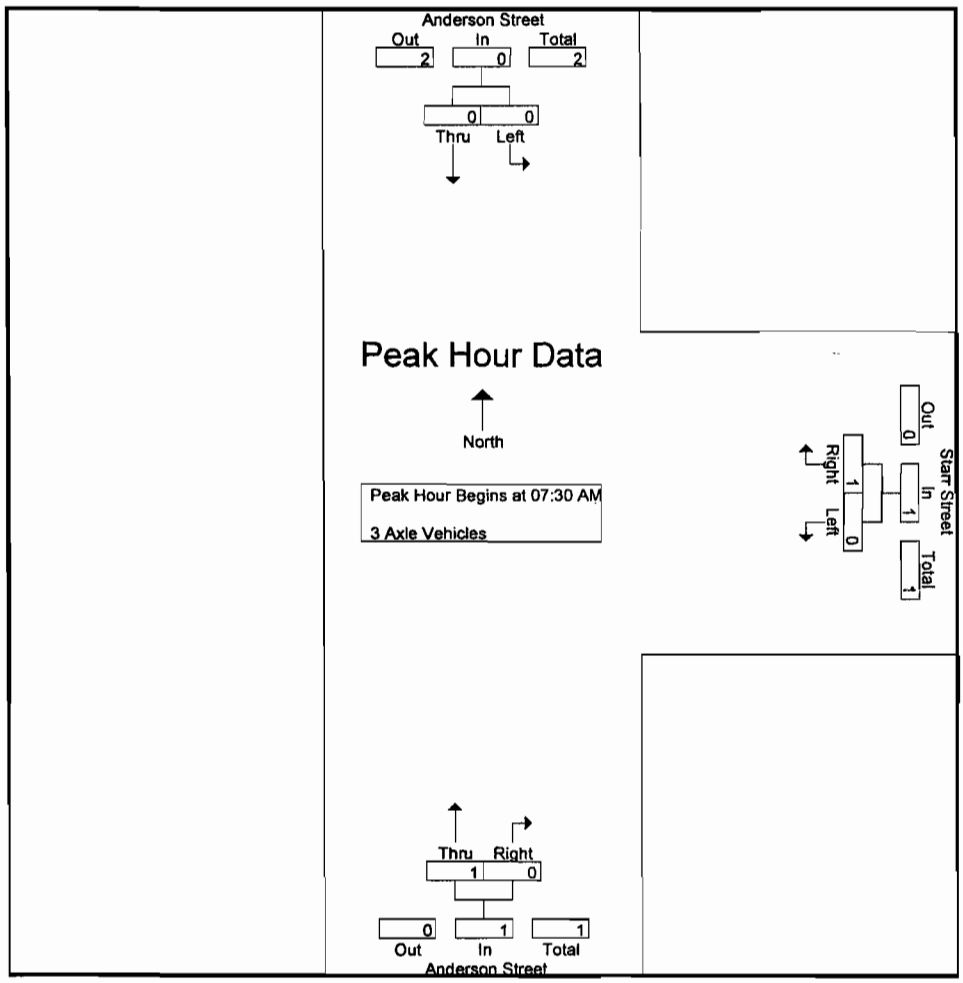

Peak Hour Analysis From 07:30 AM to 08:15 AM - Peak 1 of 1
Peak Hour for Each Approach Begins at:

	07:30 AM			07:30 AM			07:30 AM		
+0 mins.	0	0	0	0	1	1	0	0	0
+15 mins.	0	0	0	0	0	0	0	0	0
+30 mins.	0	0	0	0	0	0	1	0	1
+45 mins.	0	0	0	0	0	0	0	0	0
Total Volume	0	0	0	0	1	1	1	0	1
% App. Total	0	0		0	100		100	0	
PHF	.000	.000	.000	.000	.250	.250	.250	.000	.250

Counts Unlimited Inc.
PO Box 1178
Corona, CA 92878
(951) 268-6268

City of Loma Linda
N/S: Anderson Street
E/W: Starr Street
Weather: Sunny

File Name : LMLANSTAM
Site Code : 00000043
Start Date : 10/12/2011
Page No : 1

Groups Printed- 4 Axle Trucks

	Anderson Street Southbound			Starr Street Westbound			Anderson Street Northbound			
Start Time	Left	Thru	App. Total	Left	Right	App. Total	Thru	Right	App. Total	Int. Total
07:00 AM	0	0	0	0	0	0	0	0	0	0
07:15 AM	0	1	1	0	0	0	0	0	0	1
07:30 AM	0	0	0	0	0	0	0	0	0	0
07:45 AM	0	0	0	0	0	0	0	0	0	0
Total	0	1	1	0	0	0	0	0	0	1
08:00 AM	0	0	0	0	0	0	1	0	1	1
08:15 AM	0	0	0	0	0	0	1	0	1	1
08:30 AM	0	0	0	0	0	0	0	0	0	0
08:45 AM	0	0	0	0	0	0	1	0	1	1
Total	0	0	0	0	0	0	3	0	3	3
Grand Total	0	1	1	0	0	0	3	0	3	4
Apprch %	0	100		0	0		100	0		
Total %	0	25	25	0	0	0	75	0	75	

	Anderson Street Southbound			Starr Street Westbound			Anderson Street Northbound			
Start Time	Left	Thru	App. Total	Left	Right	App. Total	Thru	Right	App. Total	Int. Total
Peak Hour Analysis From 07:30 AM to 08:15 AM - Peak 1 of 1										
Peak Hour for Entire Intersection Begins at 07:30 AM										
07:30 AM	0	0	0	0	0	0	0	0	0	0
07:45 AM	0	0	0	0	0	0	0	0	0	0
08:00 AM	0	0	0	0	0	0	1	0	1	1
08:15 AM	0	0	0	0	0	0	1	0	1	1
Total Volume	0	0	0	0	0	0	2	0	2	2
% App. Total	0	0		0	0		100	0		
PHF	.000	.000	.000	.000	.000	.000	.500	.000	.500	.500

Counts Unlimited Inc.
PO Box 1178
Corona, CA 92878
(951) 268-6268

City of Loma Linda
N/S: Anderson Street
E/W: Starr Street
Weather: Sunny

File Name : LMLANSTAM
Site Code : 00000043
Start Date : 10/12/2011
Page No : 2

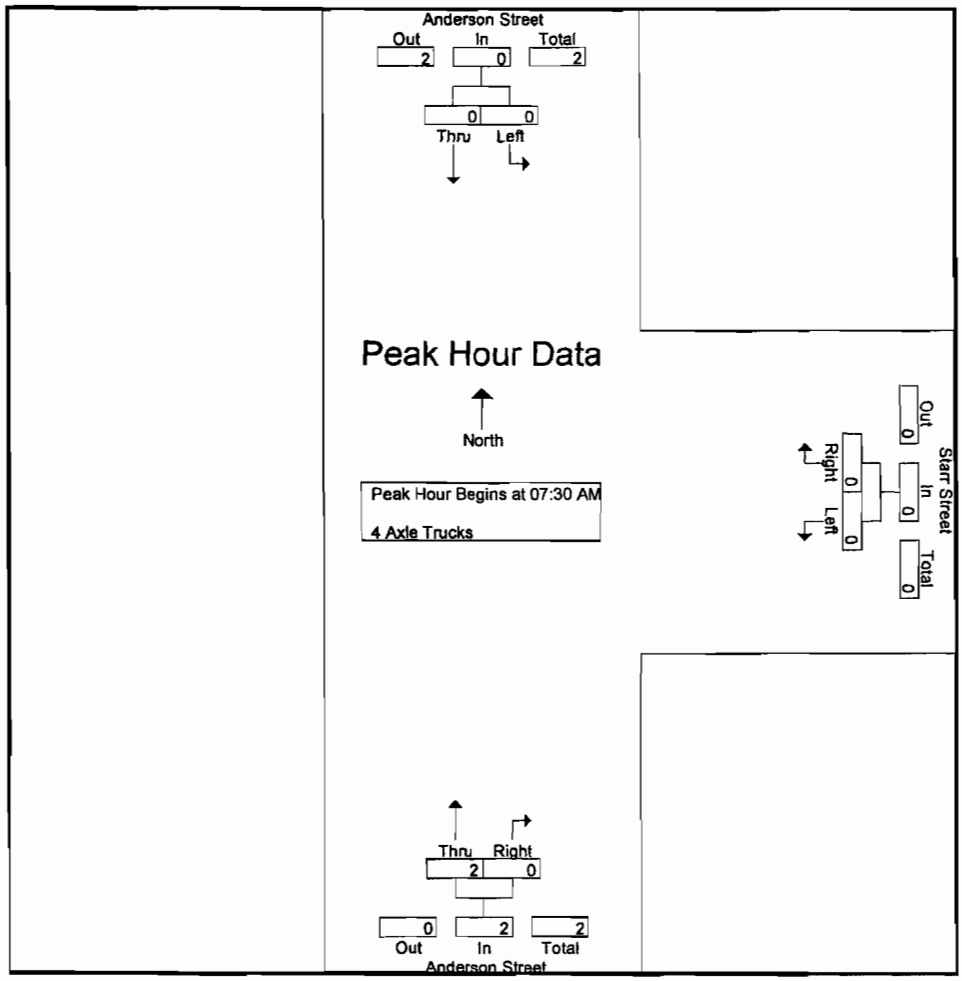

Peak Hour Analysis From 07:30 AM to 08:15 AM - Peak 1 of 1
Peak Hour for Each Approach Begins at:

	07:30 AM			07:30 AM			07:30 AM		
+0 mins.	0	0	0	0	0	0	0	0	0
+15 mins.	0	0	0	0	0	0	0	0	0
+30 mins.	0	0	0	0	0	0	1	0	1
+45 mins.	0	0	0	0	0	0	1	0	1
Total Volume	0	0	0	0	0	0	2	0	2
% App. Total	0	0		0	0		100	0	
PHF	.000	.000	.000	.000	.000	.000	.500	.000	.500

Counts Unlimited Inc.
PO Box 1178
Corona, CA 92878
(951) 268-6268

City of Loma Linda
N/S: Anderson Street
E/W: Starr Street
Weather: Sunny

File Name : LMLANSTPM
Site Code : 00000043
Start Date : 10/12/2011
Page No : 1

Groups Printed- Passenger Vehicles - Large 2 Axle Vehicles - 3 Axle Vehicles - 4 Axle Trucks

	Anderson Street Southbound			Starr Street Westbound			Anderson Street Northbound			
Start Time	Left	Thru	App. Total	Left	Right	App. Total	Thru	Right	App. Total	Int. Total
04:00 PM	4	126	130	0	4	4	102	1	103	237
04:15 PM	3	107	110	1	4	5	111	2	113	228
04:30 PM	2	161	163	0	4	4	98	2	100	267
04:45 PM	3	140	143	4	8	12	118	1	119	274
Total	12	534	546	5	20	25	429	6	435	1006
05:00 PM	5	137	142	7	8	15	120	4	124	281
05:15 PM	5	161	166	2	7	9	108	1	109	284
05:30 PM	2	111	113	3	4	7	111	4	115	235
05:45 PM	3	115	118	2	2	4	117	2	119	241
Total	15	524	539	14	21	35	456	11	467	1041
Grand Total	27	1058	1085	19	41	60	885	17	902	2047
Apprch %	2.5	97.5		31.7	68.3		98.1	1.9		
Total %	1.3	51.7	53	0.9	2	2.9	43.2	0.8	44.1	
Passenger Vehicles	27	1030	1057	19	41	60	867	17	884	2001
% Passenger Vehicles	100	97.4	97.4	100	100	100	98	100	98	97.8
Large 2 Axle Vehicles	0	25	25	0	0	0	17	0	17	42
% Large 2 Axle Vehicles	0	2.4	2.3	0	0	0	1.9	0	1.9	2.1
3 Axle Vehicles	0	1	1	0	0	0	0	0	0	1
% 3 Axle Vehicles	0	0.1	0.1	0	0	0	0	0	0	0
4 Axle Trucks	0	2	2	0	0	0	1	0	1	3
% 4 Axle Trucks	0	0.2	0.2	0	0	0	0.1	0	0.1	0.1

	Anderson Street Southbound			Starr Street Westbound			Anderson Street Northbound			
Start Time	Left	Thru	App. Total	Left	Right	App. Total	Thru	Right	App. Total	Int. Total
Peak Hour Analysis From 04:00 PM to 05:45 PM - Peak 1 of 1										
Peak Hour for Entire Intersection Begins at 04:30 PM										
04:30 PM	2	**161**	163	0	4	4	98	2	100	267
04:45 PM	3	140	143	4	**8**	12	118	1	119	274
05:00 PM	**5**	137	142	**7**	8	**15**	**120**	**4**	**124**	281
05:15 PM	5	161	**166**	2	7	9	108	1	109	**284**
Total Volume	15	599	614	13	27	40	444	8	452	1106
% App. Total	2.4	97.6		32.5	67.5		98.2	1.8		
PHF	.750	.930	.925	.464	.844	.667	.925	.500	.911	.974

Counts Unlimited Inc.
PO Box 1178
Corona, CA 92878
(951) 268-6268

City of Loma Linda
N/S: Anderson Street
E/W: Starr Street
Weather: Sunny

File Name : LMLANSTPM
Site Code : 00000043
Start Date : 10/12/2011
Page No : 2

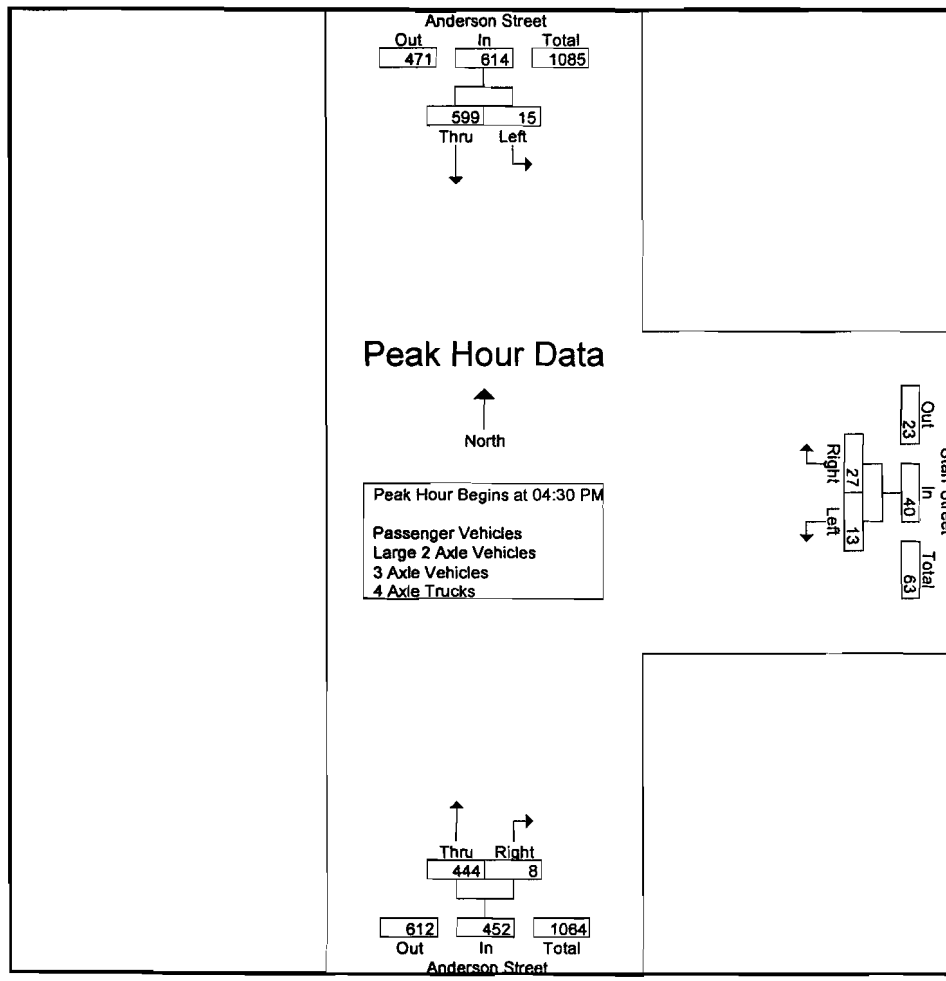

Peak Hour Analysis From 04:00 PM to 05:45 PM - Peak 1 of 1

Peak Hour for Each Approach Begins at:

	04:30 PM			04:45 PM			04:45 PM		
+0 mins.	2	**161**	163	4	**8**	12	118	1	119
+15 mins.	3	140	143	**7**	8	**15**	**120**	**4**	**124**
+30 mins.	**5**	137	142	2	7	9	108	1	109
+45 mins.	5	161	**166**	3	4	7	111	4	115
Total Volume	15	599	614	16	27	43	457	10	467
% App. Total	2.4	97.6		37.2	62.8		97.9	2.1	
PHF	.750	.930	.925	.571	.844	.717	.952	.625	.942

Counts Unlimited Inc.
PO Box 1178
Corona, CA 92878
(951) 268-6268

City of Loma Linda
N/S: Anderson Street
E/W: Starr Street
Weather: Sunny

File Name : LMLANSTPM
Site Code : 00000043
Start Date : 10/12/2011
Page No : 1

Groups Printed- Passenger Vehicles

	Anderson Street Southbound			Starr Street Westbound			Anderson Street Northbound			
Start Time	Left	Thru	App. Total	Left	Right	App. Total	Thru	Right	App. Total	Int. Total
04:00 PM	4	123	127	0	4	4	99	1	100	231
04:15 PM	3	105	108	1	4	5	109	2	111	224
04:30 PM	2	155	157	0	4	4	96	2	98	259
04:45 PM	3	136	139	4	8	12	116	1	117	268
Total	12	519	531	5	20	25	420	6	426	982
05:00 PM	5	135	140	7	8	15	118	4	122	277
05:15 PM	5	156	161	2	7	9	107	1	108	278
05:30 PM	2	108	110	3	4	7	107	4	111	228
05:45 PM	3	112	115	2	2	4	115	2	117	236
Total	15	511	526	14	21	35	447	11	458	1019
Grand Total	27	1030	1057	19	41	60	867	17	884	2001
Apprch %	2.6	97.4		31.7	68.3		98.1	1.9		
Total %	1.3	51.5	52.8	0.9	2	3	43.3	0.8	44.2	

	Anderson Street Southbound			Starr Street Westbound			Anderson Street Northbound			
Start Time	Left	Thru	App. Total	Left	Right	App. Total	Thru	Right	App. Total	Int. Total
Peak Hour Analysis From 04:30 PM to 05:15 PM - Peak 1 of 1										
Peak Hour for Entire Intersection Begins at 04:30 PM										
04:30 PM	2	155	157	0	4	4	96	2	98	259
04:45 PM	3	136	139	4	**8**	12	116	1	117	268
05:00 PM	**5**	135	140	**7**	8	**15**	**118**	**4**	**122**	277
05:15 PM	5	**156**	**161**	2	7	9	107	1	108	**278**
Total Volume	15	582	597	13	27	40	437	8	445	1082
% App. Total	2.5	97.5		32.5	67.5		98.2	1.8		
PHF	.750	.933	.927	.464	.844	.667	.926	.500	.912	.973

Counts Unlimited Inc.
PO Box 1178
Corona, CA 92878
(951) 268-6268

City of Loma Linda
N/S: Anderson Street
E/W: Starr Street
Weather: Sunny

File Name : LMLANSTPM
Site Code : 00000043
Start Date : 10/12/2011
Page No : 2

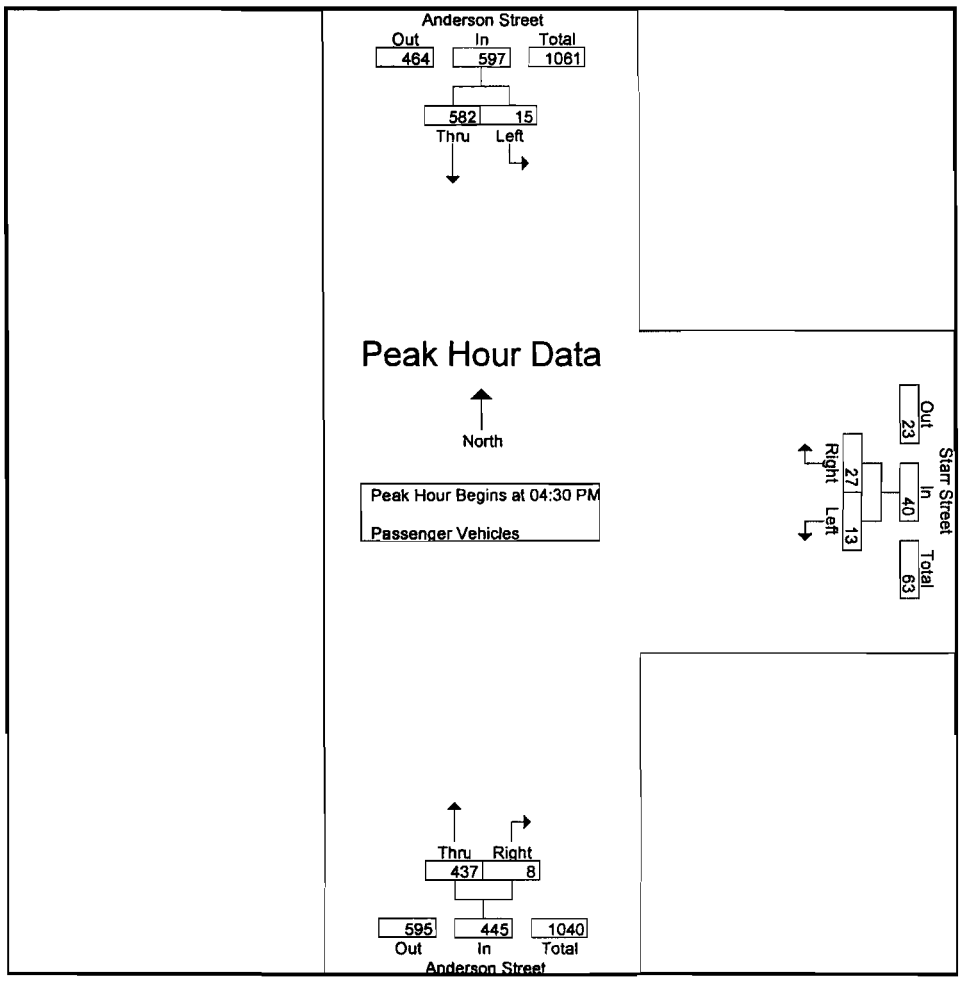

Peak Hour Analysis From 04:30 PM to 05:15 PM - Peak 1 of 1

Peak Hour for Each Approach Begins at:

	04:30 PM			04:30 PM			04:30 PM		
+0 mins.	2	155	157	0	4	4	96	2	98
+15 mins.	3	136	139	4	**8**	12	116	1	117
+30 mins.	**5**	135	140	**7**	8	**15**	**118**	**4**	**122**
+45 mins.	5	**156**	**161**	2	7	9	107	1	108
Total Volume	15	582	597	13	27	40	437	8	445
% App. Total	2.5	97.5		32.5	67.5		98.2	1.8	
PHF	.750	.933	.927	.464	.844	.667	.926	.500	.912

Counts Unlimited Inc.
PO Box 1178
Corona, CA 92878
(951) 268-6268

City of Loma Linda
N/S: Anderson Street
E/W: Starr Street
Weather: Sunny

File Name : LMLANSTPM
Site Code : 00000043
Start Date : 10/12/2011
Page No : 1

Groups Printed- Large 2 Axle Vehicles

	Anderson Street Southbound			Starr Street Westbound			Anderson Street Northbound			
Start Time	Left	Thru	App. Total	Left	Right	App. Total	Thru	Right	App. Total	Int. Total
04:00 PM	0	3	3	0	0	0	2	0	2	5
04:15 PM	0	2	2	0	0	0	2	0	2	4
04:30 PM	0	4	4	0	0	0	2	0	2	6
04:45 PM	0	4	4	0	0	0	2	0	2	6
Total	0	13	13	0	0	0	8	0	8	21
05:00 PM	0	1	1	0	0	0	2	0	2	3
05:15 PM	0	5	5	0	0	0	1	0	1	6
05:30 PM	0	3	3	0	0	0	4	0	4	7
05:45 PM	0	3	3	0	0	0	2	0	2	5
Total	0	12	12	0	0	0	9	0	9	21
Grand Total	0	25	25	0	0	0	17	0	17	42
Apprch %	0	100		0	0		100	0		
Total %	0	59.5	59.5	0	0	0	40.5	0	40.5	

	Anderson Street Southbound			Starr Street Westbound			Anderson Street Northbound			
Start Time	Left	Thru	App. Total	Left	Right	App. Total	Thru	Right	App. Total	Int. Total
Peak Hour Analysis From 04:30 PM to 05:15 PM - Peak 1 of 1										
Peak Hour for Entire Intersection Begins at 04:30 PM										
04:30 PM	0	4	4	0	0	0	2	0	2	6
04:45 PM	0	4	4	0	0	0	2	0	2	6
05:00 PM	0	1	1	0	0	0	2	0	2	3
05:15 PM	0	5	5	0	0	0	1	0	1	6
Total Volume	0	14	14	0	0	0	7	0	7	21
% App. Total	0	100		0	0		100	0		
PHF	.000	.700	.700	.000	.000	.000	.875	.000	.875	.875

Counts Unlimited Inc.
PO Box 1178
Corona, CA 92878
(951) 268-6268

City of Loma Linda
N/S: Anderson Street
E/W: Starr Street
Weather: Sunny

File Name : LMLANSTPM
Site Code : 00000043
Start Date : 10/12/2011
Page No : 2

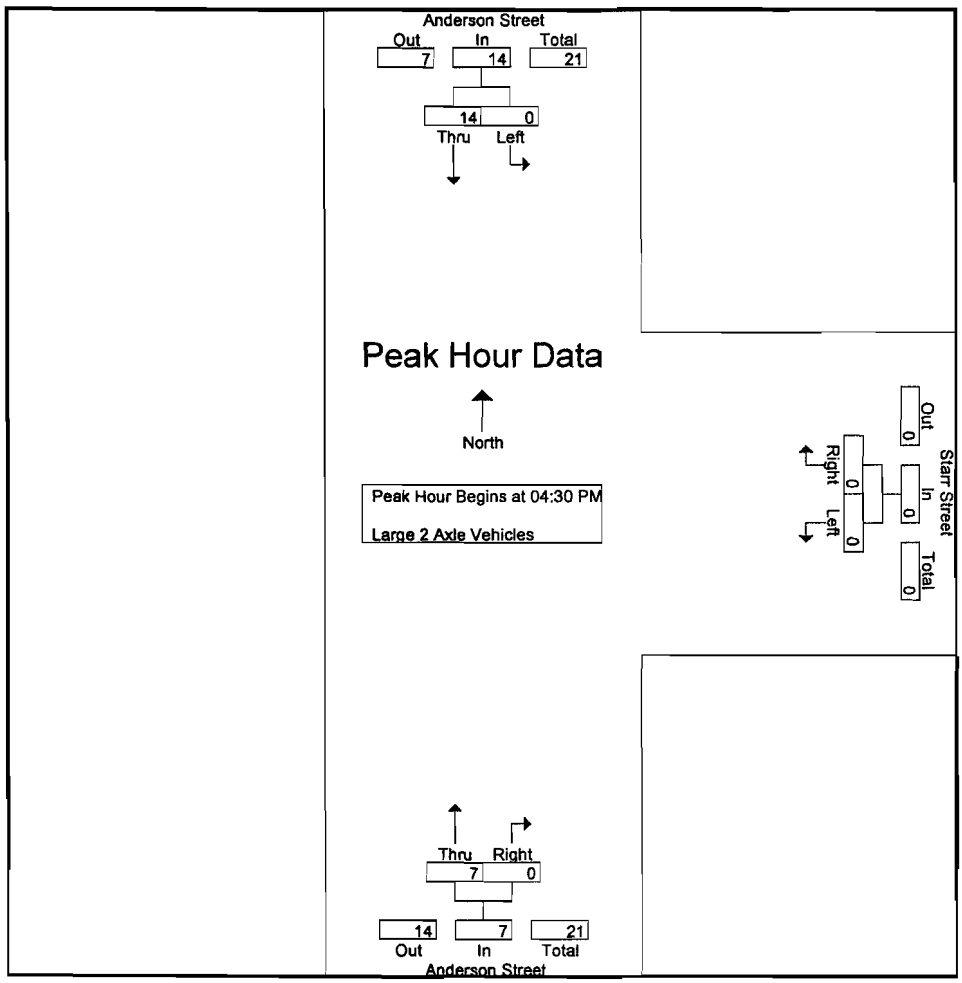

Peak Hour Analysis From 04:30 PM to 05:15 PM - Peak 1 of 1

Peak Hour for Each Approach Begins at:

	04:30 PM			04:30 PM			04:30 PM		
+0 mins.	0	4	4	0	0	0	2	0	2
+15 mins.	0	4	4	0	0	0	2	0	2
+30 mins.	0	1	1	0	0	0	2	0	2
+45 mins.	0	5	5	0	0	0	1	0	1
Total Volume	0	14	14	0	0	0	7	0	7
% App. Total	0	100		0	0		100	0	
PHF	.000	.700	.700	.000	.000	.000	.875	.000	.875

Counts Unlimited Inc.
PO Box 1178
Corona, CA 92878
(951) 268-6268

City of Loma Linda
N/S: Anderson Street
E/W: Starr Street
Weather: Sunny

File Name : LMLANSTPM
Site Code : 00000043
Start Date : 10/12/2011
Page No : 1

Groups Printed- 3 Axle Vehicles

	Anderson Street Southbound			Starr Street Westbound			Anderson Street Northbound			
Start Time	Left	Thru	App. Total	Left	Right	App. Total	Thru	Right	App. Total	Int. Total
04:00 PM	0	0	0	0	0	0	0	0	0	0
04:15 PM	0	0	0	0	0	0	0	0	0	0
04:30 PM	0	0	0	0	0	0	0	0	0	0
04:45 PM	0	0	0	0	0	0	0	0	0	0
Total	0	0	0	0	0	0	0	0	0	0
05:00 PM	0	1	1	0	0	0	0	0	0	1
05:15 PM	0	0	0	0	0	0	0	0	0	0
05:30 PM	0	0	0	0	0	0	0	0	0	0
05:45 PM	0	0	0	0	0	0	0	0	0	0
Total	0	1	1	0	0	0	0	0	0	1
Grand Total	0	1	1	0	0	0	0	0	0	1
Apprch %	0	100		0	0		0	0		
Total %	0	100	100	0	0	0	0	0	0	

	Anderson Street Southbound			Starr Street Westbound			Anderson Street Northbound			
Start Time	Left	Thru	App. Total	Left	Right	App. Total	Thru	Right	App. Total	Int. Total
Peak Hour Analysis From 04:30 PM to 05:15 PM - Peak 1 of 1										
Peak Hour for Entire Intersection Begins at 04:30 PM										
04:30 PM	0	0	0	0	0	0	0	0	0	0
04:45 PM	0	0	0	0	0	0	0	0	0	0
05:00 PM	0	1	1	0	0	0	0	0	0	1
05:15 PM	0	0	0	0	0	0	0	0	0	0
Total Volume	0	1	1	0	0	0	0	0	0	1
% App. Total	0	100		0	0		0	0		
PHF	.000	.250	.250	.000	.000	.000	.000	.000	.000	.250

Counts Unlimited Inc.
PO Box 1178
Corona, CA 92878
(951) 268-6268

City of Loma Linda
N/S: Anderson Street
E/W: Starr Street
Weather: Sunny

File Name : LMLANSTPM
Site Code : 00000043
Start Date : 10/12/2011
Page No : 2

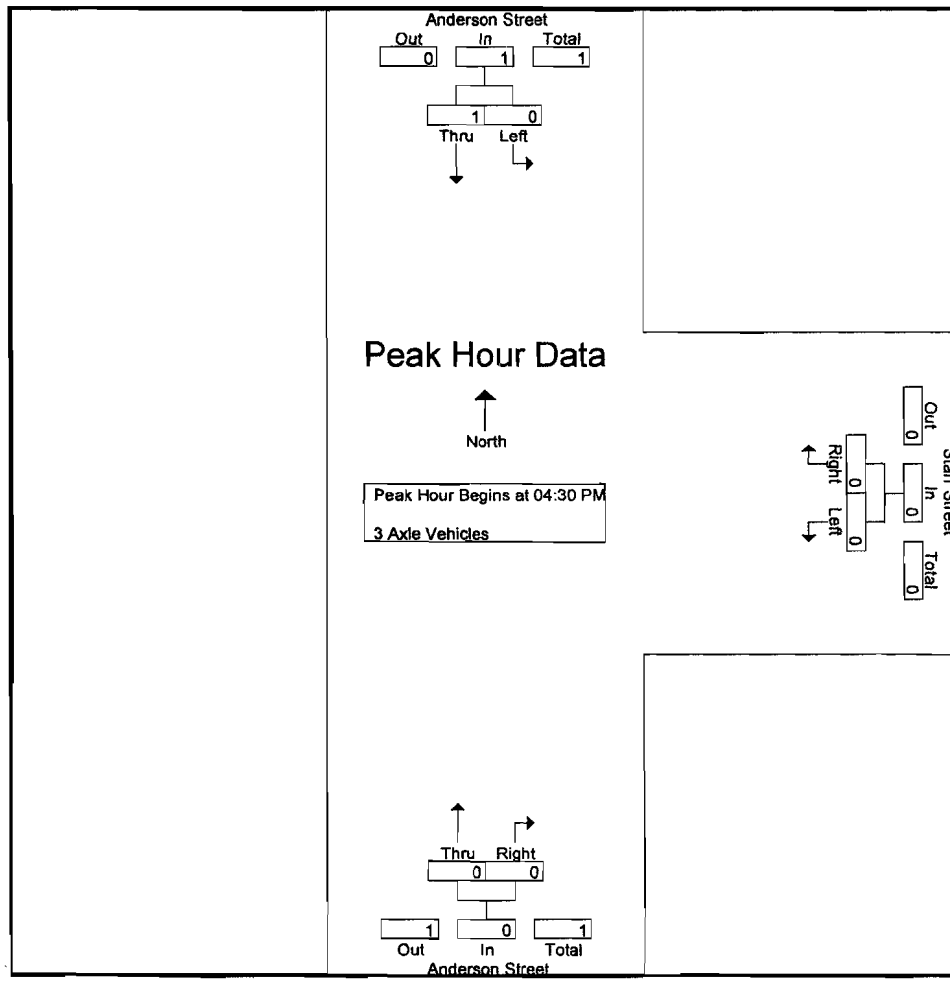

Peak Hour Analysis From 04:30 PM to 05:15 PM - Peak 1 of 1

Peak Hour for Each Approach Begins at:

	04:30 PM			04:30 PM			04:30 PM		
+0 mins.	0	0	0	0	0	0	0	0	0
+15 mins.	0	0	0	0	0	0	0	0	0
+30 mins.	0	1	1	0	0	0	0	0	0
+45 mins.	0	0	0	0	0	0	0	0	0
Total Volume	0	1	1	0	0	0	0	0	0
% App. Total	0	100		0	0		0	0	
PHF	.000	.250	.250	.000	.000	.000	.000	.000	.000

Counts Unlimited Inc.
PO Box 1178
Corona, CA 92878
(951) 268-6268

City of Loma Linda
N/S: Anderson Street
E/W: Starr Street
Weather: Sunny

File Name : LMLANSTPM
Site Code : 00000043
Start Date : 10/12/2011
Page No : 1

Groups Printed- 4 Axle Trucks

	Anderson Street Southbound			Starr Street Westbound			Anderson Street Northbound			
Start Time	Left	Thru	App. Total	Left	Right	App. Total	Thru	Right	App. Total	Int. Total
04:00 PM	0	0	0	0	0	0	1	0	1	1
04:15 PM	0	0	0	0	0	0	0	0	0	0
04:30 PM	0	2	2	0	0	0	0	0	0	2
04:45 PM	0	0	0	0	0	0	0	0	0	0
Total	0	2	2	0	0	0	1	0	1	3
05:00 PM	0	0	0	0	0	0	0	0	0	0
05:15 PM	0	0	0	0	0	0	0	0	0	0
05:30 PM	0	0	0	0	0	0	0	0	0	0
05:45 PM	0	0	0	0	0	0	0	0	0	0
Total	0	0	0	0	0	0	0	0	0	0
Grand Total	0	2	2	0	0	0	1	0	1	3
Apprch %	0	100		0	0		100	0		
Total %	0	66.7	66.7	0	0	0	33.3	0	33.3	

	Anderson Street Southbound			Starr Street Westbound			Anderson Street Northbound			
Start Time	Left	Thru	App. Total	Left	Right	App. Total	Thru	Right	App. Total	Int. Total
Peak Hour Analysis From 04:30 PM to 05:15 PM - Peak 1 of 1										
Peak Hour for Entire Intersection Begins at 04:30 PM										
04:30 PM	0	2	2	0	0	0	0	0	0	2
04:45 PM	0	0	0	0	0	0	0	0	0	0
05:00 PM	0	0	0	0	0	0	0	0	0	0
05:15 PM	0	0	0	0	0	0	0	0	0	0
Total Volume	0	2	2	0	0	0	0	0	0	2
% App. Total	0	100		0	0		0	0		
PHF	.000	.250	.250	.000	.000	.000	.000	.000	.000	.250

Counts Unlimited Inc.
PO Box 1178
Corona, CA 92878
(951) 268-6268

City of Loma Linda
N/S: Anderson Street
E/W: Starr Street
Weather: Sunny

File Name : LMLANSTPM
Site Code : 00000043
Start Date : 10/12/2011
Page No : 2

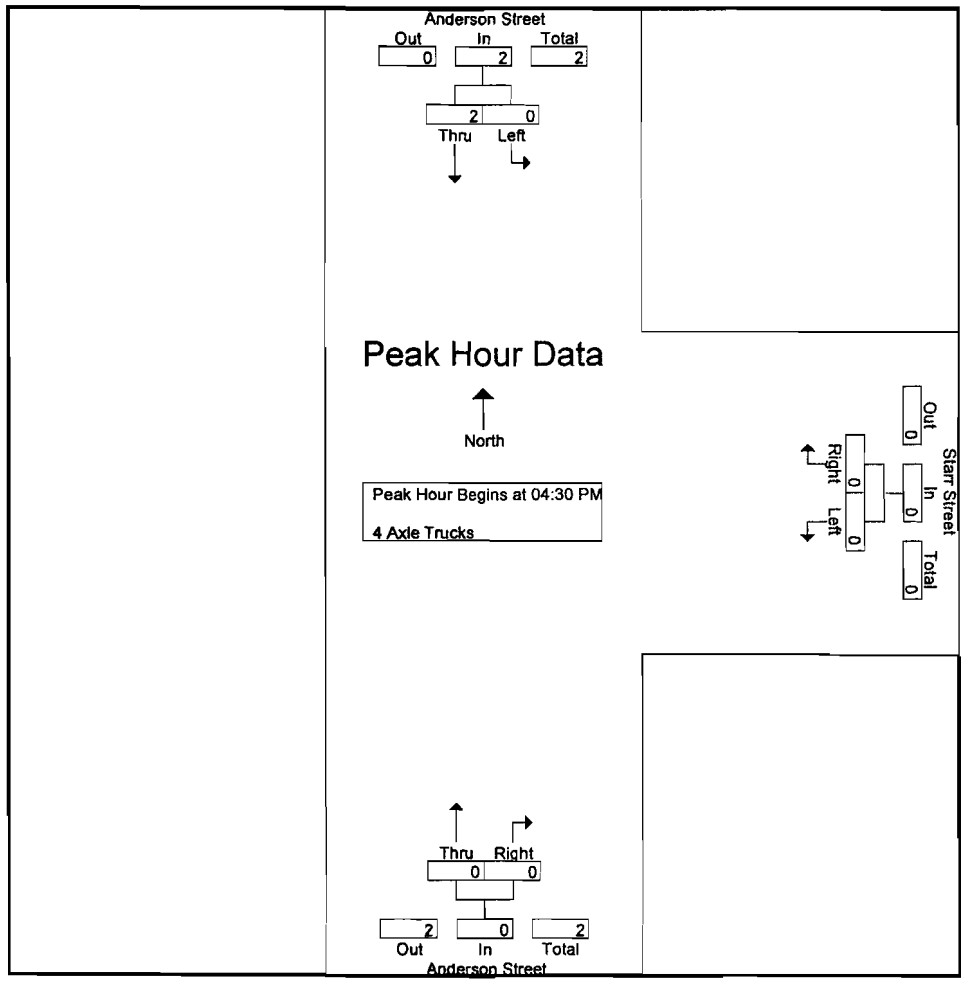

Peak Hour Analysis From 04:30 PM to 05:15 PM - Peak 1 of 1

Peak Hour for Each Approach Begins at:

	04:30 PM			04:30 PM			04:30 PM		
+0 mins.	0	2	2	0	0	0	0	0	0
+15 mins.	0	0	0	0	0	0	0	0	0
+30 mins.	0	0	0	0	0	0	0	0	0
+45 mins.	0	0	0	0	0	0	0	0	0
Total Volume	0	2	2	0	0	0	0	0	0
% App. Total	0	100		0	0		0	0	
PHF	.000	.250	.250	.000	.000	.000	.000	.000	.000

Counts Unlimited Inc.
PO Box 1178
Corona, CA 92878
(951) 268-6268

City of Loma Linda
N/S: Anderson Street
E/W: Barton Road
Weather: Sunny

File Name : LMLANBAAM
Site Code : 00000097
Start Date : 10/12/2011
Page No : 1

Groups Printed- Passenger Vehicles - Large 2 Axle Vehicles - 3 Axle Vehicles - 4+ Axle Trucks

	Anderson Street Southbound				Barton Road Westbound				Anderson Street Northbound				Barton Road Eastbound				
Start Time	Left	Thru	Right	App. Total	Left	Thru	Right	App. Total	Left	Thru	Right	App. Total	Left	Thru	Right	App. Total	Int. Total
07:00 AM	21	30	17	68	22	114	24	160	17	23	5	45	27	121	5	153	426
07:15 AM	23	24	22	69	22	144	35	201	12	20	10	42	34	172	34	240	552
07:30 AM	33	36	22	91	34	182	48	264	29	49	8	86	54	195	27	276	717
07:45 AM	38	36	38	112	47	212	53	312	27	49	8	84	88	205	44	337	845
Total	115	126	99	340	125	652	160	937	85	141	31	257	203	693	110	1006	2540
08:00 AM	25	41	32	98	37	148	36	221	13	21	6	40	56	189	24	269	628
08:15 AM	36	52	20	108	23	133	40	196	13	21	9	43	46	156	19	221	568
08:30 AM	36	33	16	85	41	100	27	168	21	26	8	55	45	149	18	212	520
08:45 AM	26	41	28	95	24	132	33	189	17	25	5	47	40	159	19	218	549
Total	123	167	96	386	125	513	136	774	64	93	28	185	187	653	80	920	2265
Grand Total	238	293	195	726	250	1165	296	1711	149	234	59	442	390	1346	190	1926	4805
Apprch %	32.8	40.4	26.9		14.6	68.1	17.3		33.7	52.9	13.3		20.2	69.9	9.9		
Total %	5	6.1	4.1	15.1	5.2	24.2	6.2	35.6	3.1	4.9	1.2	9.2	8.1	28	4	40.1	
Passenger Vehicles	214	282	191	687	244	1137	286	1667	147	226	54	427	387	1313	186	1886	4667
% Passenger Vehicles	89.9	96.2	97.9	94.6	97.6	97.6	96.6	97.4	98.7	96.6	91.5	96.6	99.2	97.5	97.9	97.9	97.1
Large 2 Axle Vehicles	24	11	3	38	5	24	9	38	2	8	5	15	0	29	4	33	124
% Large 2 Axle Vehicles	10.1	3.8	1.5	5.2	2	2.1	3	2.2	1.3	3.4	8.5	3.4	0	2.2	2.1	1.7	2.6
3 Axle Vehicles	0	0	0	0	1	3	1	5	0	0	0	0	0	3	0	3	8
% 3 Axle Vehicles	0	0	0	0	0.4	0.3	0.3	0.3	0	0	0	0	0	0.2	0	0.2	0.2
4+ Axle Trucks	0	0	1	1	0	1	0	1	0	0	0	0	3	1	0	4	6
% 4+ Axle Trucks	0	0	0.5	0.1	0	0.1	0	0.1	0	0	0	0	0.8	0.1	0	0.2	0.1

	Anderson Street Southbound				Barton Road Westbound				Anderson Street Northbound				Barton Road Eastbound				
Start Time	Left	Thru	Right	App. Total	Left	Thru	Right	App. Total	Left	Thru	Right	App. Total	Left	Thru	Right	App. Total	Int. Total
Peak Hour Analysis From 07:00 AM to 08:45 AM - Peak 1 of 1																	
Peak Hour for Entire Intersection Begins at 07:30 AM																	
07:30 AM	33	36	22	91	34	182	48	264	**29**	**49**	8	**86**	54	195	27	276	717
07:45 AM	**38**	36	**38**	**112**	**47**	**212**	**53**	**312**	27	49	8	84	**88**	**205**	**44**	**337**	**845**
08:00 AM	25	41	32	98	37	148	36	221	13	21	6	40	56	189	24	269	628
08:15 AM	36	52	20	108	23	133	40	196	13	21	9	43	46	156	19	221	568
Total Volume	132	165	112	409	141	675	177	993	82	140	31	253	244	745	114	1103	2758
% App. Total	32.3	40.3	27.4		14.2	68	17.8		32.4	55.3	12.3		22.1	67.5	10.3		
PHF	.868	.793	.737	.913	.750	.796	.835	.796	.707	.714	.861	.735	.693	.909	.648	.818	.816

Counts Unlimited Inc.
PO Box 1178
Corona, CA 92878
(951) 268-6268

City of Loma Linda
N/S: Anderson Street
E/W: Barton Road
Weather: Sunny

File Name : LMLANBAAM
Site Code : 00000097
Start Date : 10/12/2011
Page No : 2

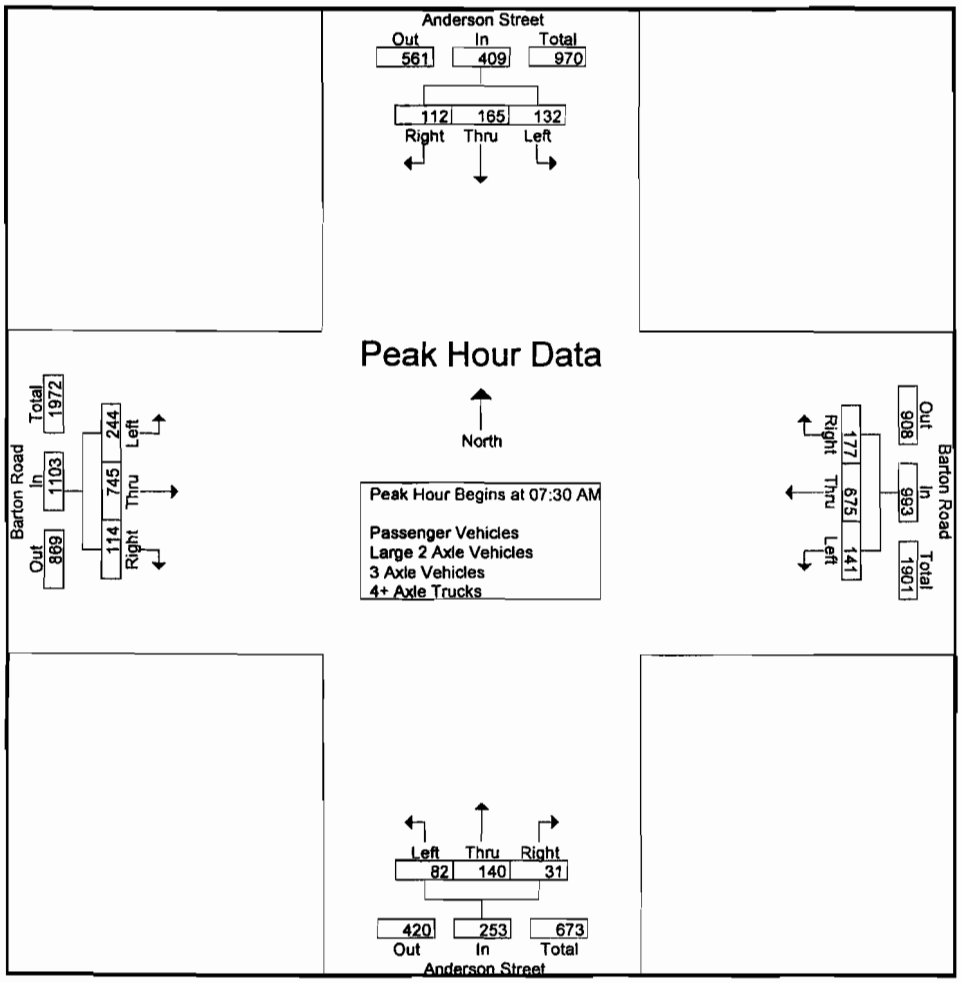

Peak Hour Analysis From 07:00 AM to 08:45 AM - Peak 1 of 1

Peak Hour for Each Approach Begins at:

	07:30 AM				07:15 AM				07:00 AM				07:15 AM			
+0 mins.	33	36	22	91	22	144	35	201	17	23	5	45	34	172	34	240
+15 mins.	**38**	36	**38**	**112**	34	182	48	264	12	20	**10**	42	54	195	27	276
+30 mins.	25	41	32	98	**47**	**212**	**53**	**312**	**29**	**49**	8	**86**	**88**	**205**	**44**	**337**
+45 mins.	36	**52**	20	108	37	148	36	221	27	49	8	84	56	189	24	269
Total Volume	132	165	112	409	140	686	172	998	85	141	31	257	232	761	129	1122
% App. Total	32.3	40.3	27.4		14	68.7	17.2		33.1	54.9	12.1		20.7	67.8	11.5	
PHF	.868	.793	.737	.913	.745	.809	.811	.800	.733	.719	.775	.747	.659	.928	.733	.832

Counts Unlimited Inc.
PO Box 1178
Corona, CA 92878
(951) 268-6268

City of Loma Linda
N/S: Anderson Street
E/W: Barton Road
Weather: Sunny

File Name : LMLANBAAM
Site Code : 00000097
Start Date : 10/12/2011
Page No : 1

Groups Printed- Passenger Vehicles

	Anderson Street Southbound				Barton Road Westbound				Anderson Street Northbound				Barton Road Eastbound				
Start Time	Left	Thru	Right	App. Total	Left	Thru	Right	App. Total	Left	Thru	Right	App. Total	Left	Thru	Right	App. Total	Int. Total
07:00 AM	19	28	17	64	22	112	23	157	17	22	5	44	27	115	5	147	412
07:15 AM	20	23	21	64	22	142	34	198	11	20	8	39	34	167	33	234	535
07:30 AM	30	34	21	85	33	180	47	260	29	49	8	86	54	192	27	273	704
07:45 AM	34	36	38	108	46	209	52	307	27	47	8	82	88	203	41	332	829
Total	103	121	97	321	123	643	156	922	84	138	29	251	203	677	106	986	2480
08:00 AM	21	40	32	93	37	142	35	214	13	20	5	38	55	182	24	261	606
08:15 AM	34	51	20	105	22	129	37	188	13	20	8	41	45	152	19	216	550
08:30 AM	33	31	14	78	40	96	26	162	21	24	7	52	45	144	18	207	499
08:45 AM	23	39	28	90	22	127	32	181	16	24	5	45	39	158	19	216	532
Total	111	161	94	366	121	494	130	745	63	88	25	176	184	636	80	900	2187
Grand Total	214	282	191	687	244	1137	286	1667	147	226	54	427	387	1313	186	1886	4667
Apprch %	31.1	41	27.8		14.6	68.2	17.2		34.4	52.9	12.6		20.5	69.6	9.9		
Total %	4.6	6	4.1	14.7	5.2	24.4	6.1	35.7	3.1	4.8	1.2	9.1	8.3	28.1	4	40.4	

	Anderson Street Southbound				Barton Road Westbound				Anderson Street Northbound				Barton Road Eastbound				
Start Time	Left	Thru	Right	App. Total	Left	Thru	Right	App. Total	Left	Thru	Right	App. Total	Left	Thru	Right	App. Total	Int. Total
Peak Hour Analysis From 07:30 AM to 08:15 AM - Peak 1 of 1																	
Peak Hour for Entire Intersection Begins at 07:30 AM																	
07:30 AM	30	34	21	85	33	180	47	260	**29**	**49**	**8**	**86**	54	192	27	273	704
07:45 AM	**34**	36	**38**	**108**	**46**	**209**	**52**	**307**	27	47	8	82	**88**	**203**	**41**	**332**	**829**
08:00 AM	21	40	32	93	37	142	35	214	13	20	5	38	55	182	24	261	606
08:15 AM	34	**51**	20	105	22	129	37	188	13	20	8	41	45	152	19	216	550
Total Volume	119	161	111	391	138	660	171	969	82	136	29	247	242	729	111	1082	2689
% App. Total	30.4	41.2	28.4		14.2	68.1	17.6		33.2	55.1	11.7		22.4	67.4	10.3		
PHF	.875	.789	.730	.905	.750	.789	.822	.789	.707	.694	.906	.718	.688	.898	.677	.815	.811

Counts Unlimited Inc.
PO Box 1178
Corona, CA 92878
(951) 268-6268

City of Loma Linda
N/S: Anderson Street
E/W: Barton Road
Weather: Sunny

File Name : LMLANBAAM
Site Code : 00000097
Start Date : 10/12/2011
Page No : 2

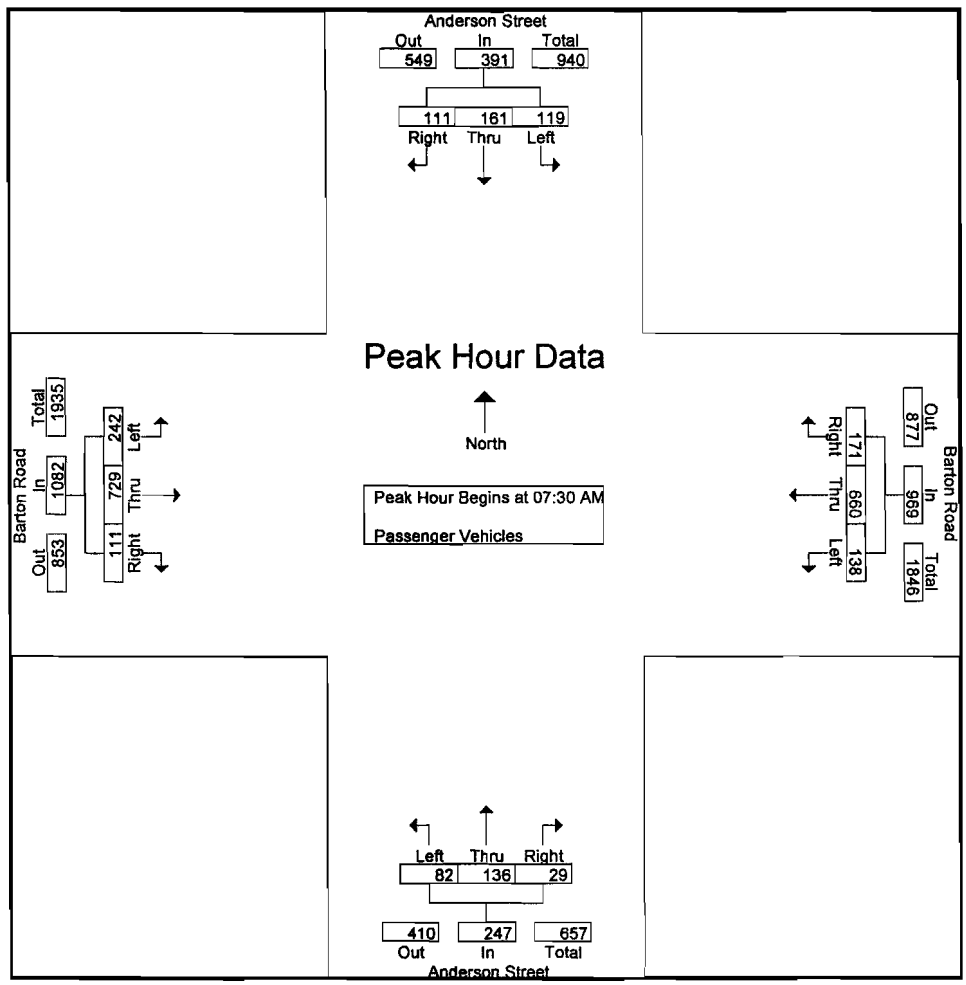

Peak Hour Analysis From 07:30 AM to 08:15 AM - Peak 1 of 1

Peak Hour for Each Approach Begins at:

	07:30 AM				07:30 AM				07:30 AM				07:30 AM			
+0 mins.	30	34	21	85	33	180	47	260	**29**	**49**	**8**	**86**	54	192	27	273
+15 mins.	**34**	36	**38**	**108**	**46**	**209**	**52**	**307**	27	47	8	82	**88**	**203**	**41**	**332**
+30 mins.	21	40	32	93	37	142	35	214	13	20	5	38	55	182	24	261
+45 mins.	34	**51**	20	105	22	129	37	188	13	20	8	41	45	152	19	216
Total Volume	119	161	111	391	138	660	171	969	82	136	29	247	242	729	111	1082
% App. Total	30.4	41.2	28.4		14.2	68.1	17.6		33.2	55.1	11.7		22.4	67.4	10.3	
PHF	.875	.789	.730	.905	.750	.789	.822	.789	.707	.694	.906	.718	.688	.898	.677	.815

Counts Unlimited Inc.
PO Box 1178
Corona, CA 92878
(951) 268-6268

City of Loma Linda
N/S: Anderson Street
E/W: Barton Road
Weather: Sunny

File Name : LMLANBAAM
Site Code : 00000097
Start Date : 10/12/2011
Page No : 1

Groups Printed- Large 2 Axle Vehicles

	Anderson Street Southbound				Barton Road Westbound				Anderson Street Northbound				Barton Road Eastbound				
Start Time	Left	Thru	Right	App. Total	Left	Thru	Right	App. Total	Left	Thru	Right	App. Total	Left	Thru	Right	App. Total	Int. Total
07:00 AM	2	2	0	4	0	2	1	3	0	1	0	1	0	5	0	5	13
07:15 AM	3	1	0	4	0	2	1	3	1	0	2	3	0	4	1	5	15
07:30 AM	3	2	1	6	1	1	1	3	0	0	0	0	0	3	0	3	12
07:45 AM	4	0	0	4	0	2	1	3	0	2	0	2	0	1	3	4	13
Total	12	5	1	18	1	7	4	12	1	3	2	6	0	13	4	17	53
08:00 AM	4	1	0	5	0	5	0	5	0	1	1	2	0	7	0	7	19
08:15 AM	2	1	0	3	1	4	3	8	0	1	1	2	0	4	0	4	17
08:30 AM	3	2	2	7	1	4	1	6	0	2	1	3	0	5	0	5	21
08:45 AM	3	2	0	5	2	4	1	7	1	1	0	2	0	0	0	0	14
Total	12	6	2	20	4	17	5	26	1	5	3	9	0	16	0	16	71
Grand Total	24	11	3	38	5	24	9	38	2	8	5	15	0	29	4	33	124
Apprch %	63.2	28.9	7.9		13.2	63.2	23.7		13.3	53.3	33.3		0	87.9	12.1		
Total %	19.4	8.9	2.4	30.6	4	19.4	7.3	30.6	1.6	6.5	4	12.1	0	23.4	3.2	26.6	

	Anderson Street Southbound				Barton Road Westbound				Anderson Street Northbound				Barton Road Eastbound				
Start Time	Left	Thru	Right	App. Total	Left	Thru	Right	App. Total	Left	Thru	Right	App. Total	Left	Thru	Right	App. Total	Int. Total
Peak Hour Analysis From 07:30 AM to 08:15 AM - Peak 1 of 1																	
Peak Hour for Entire Intersection Begins at 07:30 AM																	
07:30 AM	3	2	1	6	1	1	1	3	0	0	0	0	0	3	0	3	12
07:45 AM	4	0	0	4	0	2	1	3	0	2	0	2	0	1	3	4	13
08:00 AM	4	1	0	5	0	5	0	5	0	1	1	2	0	7	0	7	19
08:15 AM	2	1	0	3	1	4	3	8	0	1	1	2	0	4	0	4	17
Total Volume	13	4	1	18	2	12	5	19	0	4	2	6	0	15	3	18	61
% App. Total	72.2	22.2	5.6		10.5	63.2	26.3		0	66.7	33.3		0	83.3	16.7		
PHF	.813	.500	.250	.750	.500	.600	.417	.594	.000	.500	.500	.750	.000	.536	.250	.643	.803

Counts Unlimited Inc.
PO Box 1178
Corona, CA 92878
(951) 268-6268

City of Loma Linda
N/S: Anderson Street
E/W: Barton Road
Weather: Sunny

File Name : LMLANBAAM
Site Code : 00000097
Start Date : 10/12/2011
Page No : 2

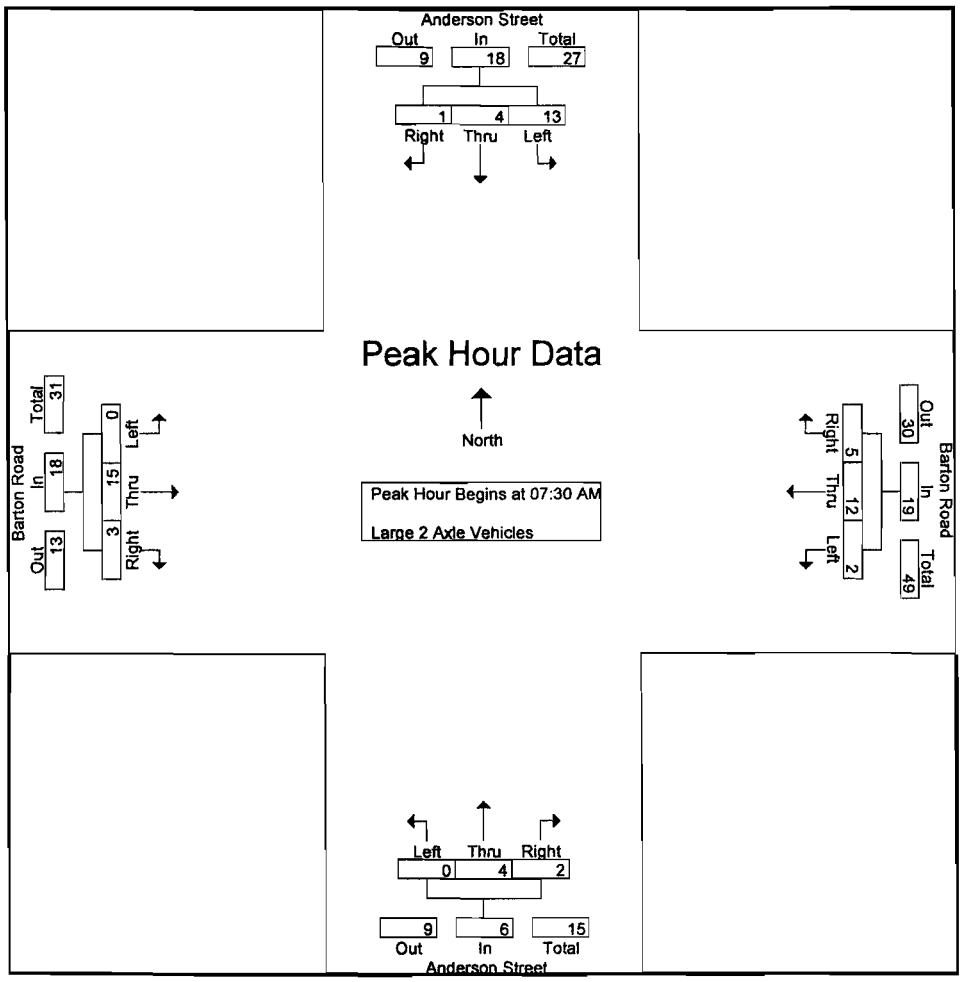

Peak Hour Analysis From 07:30 AM to 08:15 AM - Peak 1 of 1

Peak Hour for Each Approach Begins at:

	07:30 AM				07:30 AM				07:30 AM				07:30 AM			
+0 mins.	3	2	1	6	1	1	1	3	0	0	0	0	0	3	0	3
+15 mins.	4	0	0	4	0	2	1	3	0	2	0	2	0	1	3	4
+30 mins.	4	1	0	5	0	5	0	5	0	1	1	2	0	7	0	7
+45 mins.	2	1	0	3	1	4	3	8	0	1	1	2	0	4	0	4
Total Volume	13	4	1	18	2	12	5	19	0	4	2	6	0	15	3	18
% App. Total	72.2	22.2	5.6		10.5	63.2	26.3		0	66.7	33.3		0	83.3	16.7	
PHF	.813	.500	.250	.750	.500	.600	.417	.594	.000	.500	.500	.750	.000	.536	.250	.643

Counts Unlimited Inc.
PO Box 1178
Corona, CA 92878
(951) 268-6268

City of Loma Linda
N/S: Anderson Street
E/W: Barton Road
Weather: Sunny

File Name : LMLANBAAM
Site Code : 00000097
Start Date : 10/12/2011
Page No : 1

Groups Printed- 3 Axle Vehicles

	Anderson Street Southbound				Barton Road Westbound				Anderson Street Northbound				Barton Road Eastbound				
Start Time	Left	Thru	Right	App. Total	Left	Thru	Right	App. Total	Left	Thru	Right	App. Total	Left	Thru	Right	App. Total	Int. Total
07:00 AM	0	0	0	0	0	0	0	0	0	0	0	0	0	0	0	0	0
07:15 AM	0	0	0	0	0	0	0	0	0	0	0	0	0	1	0	1	1
07:30 AM	0	0	0	0	0	1	0	1	0	0	0	0	0	0	0	0	1
07:45 AM	0	0	0	0	1	0	0	1	0	0	0	0	0	1	0	1	2
Total	0	0	0	0	1	1	0	2	0	0	0	0	0	2	0	2	4
08:00 AM	0	0	0	0	0	1	1	2	0	0	0	0	0	0	0	0	2
08:15 AM	0	0	0	0	0	0	0	0	0	0	0	0	0	0	0	0	0
08:30 AM	0	0	0	0	0	0	0	0	0	0	0	0	0	0	0	0	0
08:45 AM	0	0	0	0	0	1	0	1	0	0	0	0	0	1	0	1	2
Total	0	0	0	0	0	2	1	3	0	0	0	0	0	1	0	1	4
Grand Total	0	0	0	0	1	3	1	5	0	0	0	0	0	3	0	3	8
Apprch %	0	0	0		20	60	20		0	0	0		0	100	0		
Total %	0	0	0	0	12.5	37.5	12.5	62.5	0	0	0	0	0	37.5	0	37.5	

	Anderson Street Southbound				Barton Road Westbound				Anderson Street Northbound				Barton Road Eastbound				
Start Time	Left	Thru	Right	App. Total	Left	Thru	Right	App. Total	Left	Thru	Right	App. Total	Left	Thru	Right	App. Total	Int. Total
Peak Hour Analysis From 07:30 AM to 08:15 AM - Peak 1 of 1																	
Peak Hour for Entire Intersection Begins at 07:30 AM																	
07:30 AM	0	0	0	0	0	1	0	1	0	0	0	0	0	0	0	0	1
07:45 AM	0	0	0	0	1	0	0	1	0	0	0	0	0	1	0	1	2
08:00 AM	0	0	0	0	0	1	1	2	0	0	0	0	0	0	0	0	2
08:15 AM	0	0	0	0	0	0	0	0	0	0	0	0	0	0	0	0	0
Total Volume	0	0	0	0	1	2	1	4	0	0	0	0	0	1	0	1	5
% App. Total	0	0	0		25	50	25		0	0	0		0	100	0		
PHF	.000	.000	.000	.000	.250	.500	.250	.500	.000	.000	.000	.000	.000	.250	.000	.250	.625

Counts Unlimited Inc.
PO Box 1178
Corona, CA 92878
(951) 268-6268

City of Loma Linda
N/S: Anderson Street
E/W: Barton Road
Weather: Sunny

File Name : LMLANBAAM
Site Code : 00000097
Start Date : 10/12/2011
Page No : 2

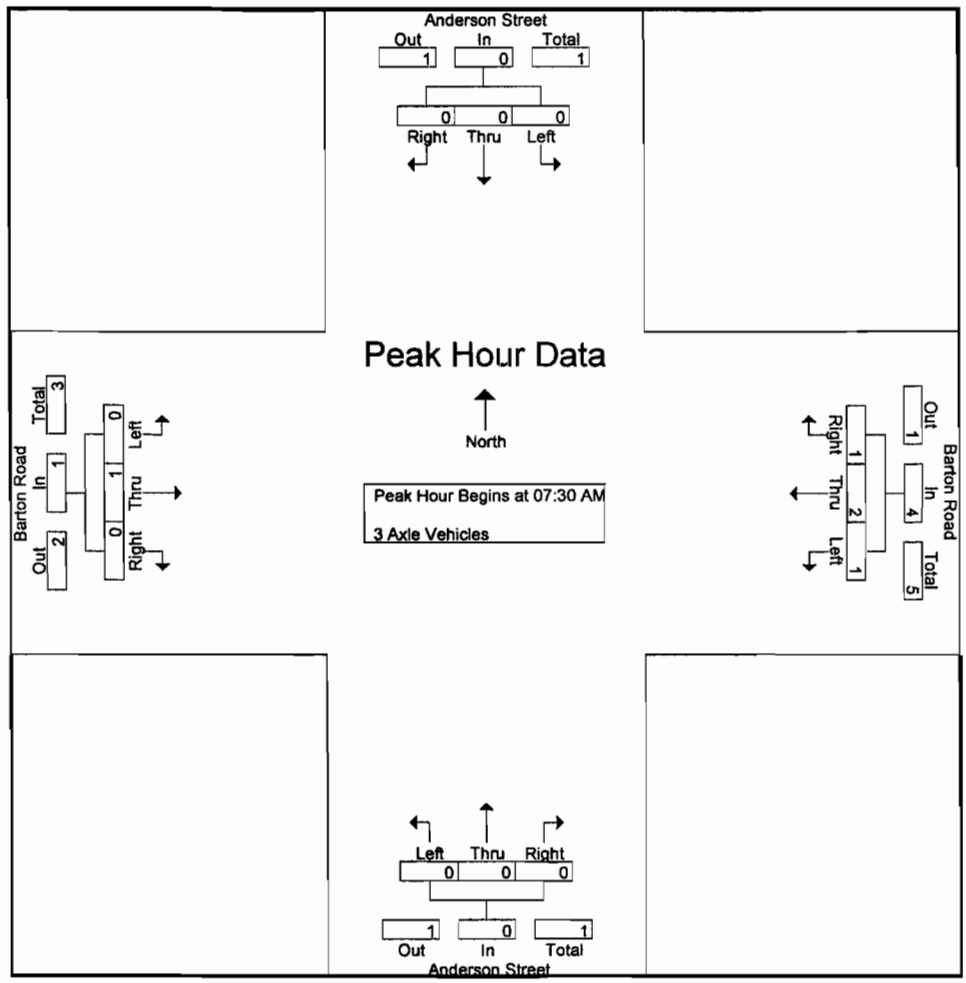

Peak Hour Analysis From 07:30 AM to 08:15 AM - Peak 1 of 1

Peak Hour for Each Approach Begins at:

	07:30 AM				07:30 AM				07:30 AM				07:30 AM			
+0 mins.	0	0	0	0	0	1	0	1	0	0	0	0	0	0	0	0
+15 mins.	0	0	0	0	1	0	0	1	0	0	0	0	0	1	0	1
+30 mins.	0	0	0	0	0	1	1	2	0	0	0	0	0	0	0	0
+45 mins.	0	0	0	0	0	0	0	0	0	0	0	0	0	0	0	0
Total Volume	0	0	0	0	1	2	1	4	0	0	0	0	0	1	0	1
% App. Total	0	0	0		25	50	25		0	0	0		0	100	0	
PHF	.000	.000	.000	.000	.250	.500	.250	.500	.000	.000	.000	.000	.000	.250	.000	.250

Counts Unlimited Inc.
PO Box 1178
Corona, CA 92878
(951) 268-6268

City of Loma Linda
N/S: Anderson Street
E/W: Barton Road
Weather: Sunny

File Name : LMLANBAAM
Site Code : 00000097
Start Date : 10/12/2011
Page No : 1

Groups Printed- 4+ Axle Trucks

	Anderson Street Southbound				Barton Road Westbound				Anderson Street Northbound				Barton Road Eastbound				
Start Time	Left	Thru	Right	App. Total	Left	Thru	Right	App. Total	Left	Thru	Right	App. Total	Left	Thru	Right	App. Total	Int. Total
07:00 AM	0	0	0	0	0	0	0	0	0	0	0	0	0	1	0	1	1
07:15 AM	0	0	1	1	0	0	0	0	0	0	0	0	0	0	0	0	1
07:30 AM	0	0	0	0	0	0	0	0	0	0	0	0	0	0	0	0	0
07:45 AM	0	0	0	0	0	1	0	1	0	0	0	0	0	0	0	0	1
Total	0	0	1	1	0	1	0	1	0	0	0	0	0	1	0	1	3
08:00 AM	0	0	0	0	0	0	0	0	0	0	0	0	1	0	0	1	1
08:15 AM	0	0	0	0	0	0	0	0	0	0	0	0	1	0	0	1	1
08:30 AM	0	0	0	0	0	0	0	0	0	0	0	0	0	0	0	0	0
08:45 AM	0	0	0	0	0	0	0	0	0	0	0	0	1	0	0	1	1
Total	0	0	0	0	0	0	0	0	0	0	0	0	3	0	0	3	3
Grand Total	0	0	1	1	0	1	0	1	0	0	0	0	3	1	0	4	6
Apprch %	0	0	100		0	100	0		0	0	0		75	25	0		
Total %	0	0	16.7	16.7	0	16.7	0	16.7	0	0	0	0	50	16.7	0	66.7	

	Anderson Street Southbound				Barton Road Westbound				Anderson Street Northbound				Barton Road Eastbound				
Start Time	Left	Thru	Right	App. Total	Left	Thru	Right	App. Total	Left	Thru	Right	App. Total	Left	Thru	Right	App. Total	Int. Total
Peak Hour Analysis From 07:30 AM to 08:15 AM - Peak 1 of 1																	
Peak Hour for Entire Intersection Begins at 07:30 AM																	
07:30 AM	0	0	0	0	0	0	0	0	0	0	0	0	0	0	0	0	0
07:45 AM	0	0	0	0	0	1	0	1	0	0	0	0	0	0	0	0	1
08:00 AM	0	0	0	0	0	0	0	0	0	0	0	0	1	0	0	1	1
08:15 AM	0	0	0	0	0	0	0	0	0	0	0	0	1	0	0	1	1
Total Volume	0	0	0	0	0	1	0	1	0	0	0	0	2	0	0	2	3
% App. Total	0	0	0		0	100	0		0	0	0		100	0	0		
PHF	.000	.000	.000	.000	.000	.250	.000	.250	.000	.000	.000	.000	.500	.000	.000	.500	.750

Counts Unlimited Inc.
PO Box 1178
Corona, CA 92878
(951) 268-6268

City of Loma Linda
N/S: Anderson Street
E/W: Barton Road
Weather: Sunny

File Name : LMLANBAAM
Site Code : 00000097
Start Date : 10/12/2011
Page No : 2

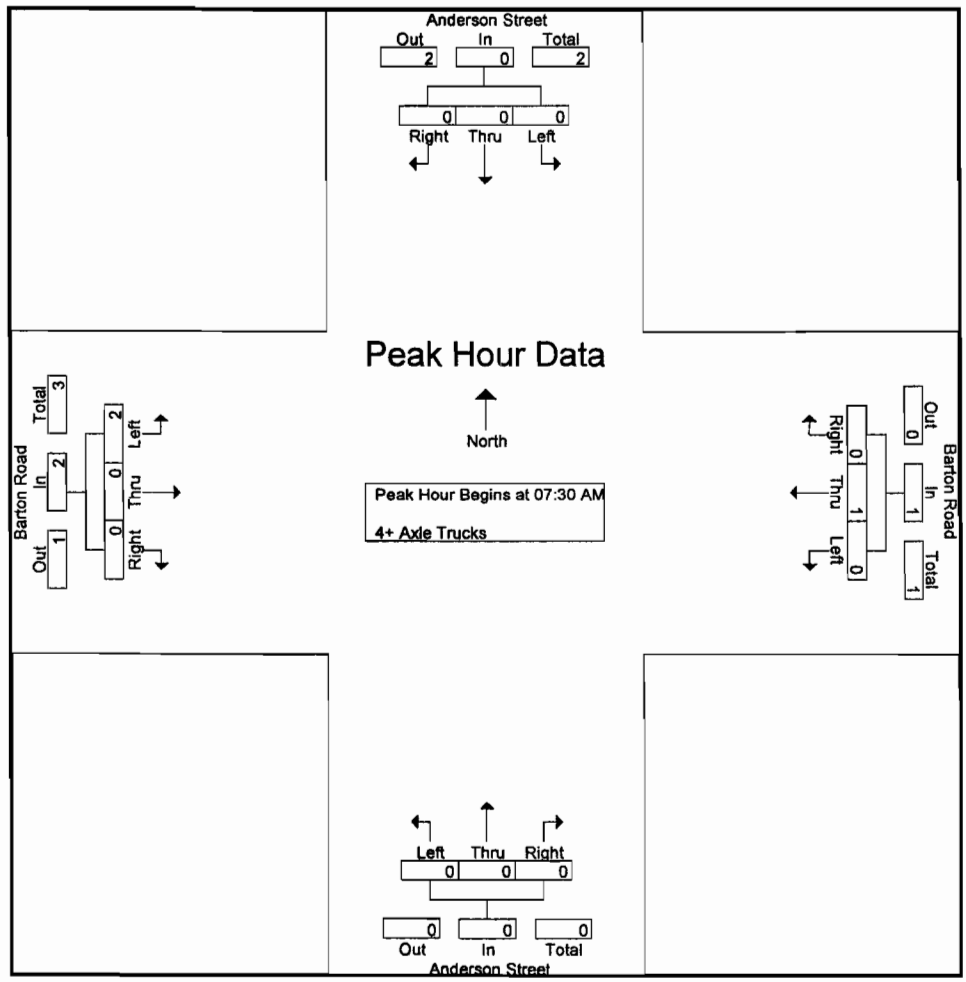

Peak Hour Analysis From 07:30 AM to 08:15 AM - Peak 1 of 1

Peak Hour for Each Approach Begins at:

	07:30 AM				07:30 AM				07:30 AM				07:30 AM			
+0 mins.	0	0	0	0	0	0	0	0	0	0	0	0	0	0	0	0
+15 mins.	0	0	0	0	0	1	0	1	0	0	0	0	0	0	0	0
+30 mins.	0	0	0	0	0	0	0	0	0	0	0	0	1	0	0	1
+45 mins.	0	0	0	0	0	0	0	0	0	0	0	0	1	0	0	1
Total Volume	0	0	0	0	0	1	0	1	0	0	0	0	2	0	0	2
% App. Total	0	0	0		0	100	0		0	0	0		100	0	0	
PHF	.000	.000	.000	.000	.000	.250	.000	.250	.000	.000	.000	.000	.500	.000	.000	.500

Counts Unlimited Inc.
PO Box 1178
Corona, CA 92878
(951) 268-6268

City of Loma Linda
N/S: Anderson Street
E/W: Barton Road
Weather: Sunny

File Name : LMLANBAPM
Site Code : 00000097
Start Date : 10/12/2011
Page No : 1

Groups Printed- Passenger Vehicles - Large 2 Axle Vehicles - 3 Axle Vehicles - 4+ Axle Trucks

	Anderson Street Southbound				Barton Road Westbound				Anderson Street Northbound				Barton Road Eastbound				
Start Time	Left	Thru	Right	App. Total	Left	Thru	Right	App Total	Left	Thru	Right	App. Total	Left	Thru	Right	App. Total	Int. Total
04:00 PM	54	33	46	133	11	185	32	228	34	31	18	83	34	156	6	196	640
04:15 PM	41	25	46	112	11	167	39	217	32	37	17	86	43	156	4	203	618
04:30 PM	60	26	71	157	15	198	36	249	39	28	24	91	34	185	12	231	728
04:45 PM	60	33	52	145	13	181	45	239	35	30	21	86	41	197	13	251	721
Total	215	117	215	547	50	731	152	933	140	126	80	346	152	694	35	881	2707
05:00 PM	74	24	75	173	11	208	38	257	70	44	21	135	41	226	16	283	848
05:15 PM	54	35	62	151	13	186	44	243	39	28	13	80	36	202	12	250	724
05:30 PM	47	23	41	111	6	167	38	211	35	37	11	83	39	180	13	232	637
05:45 PM	50	32	31	113	9	164	46	219	25	31	11	67	43	165	7	215	614
Total	225	114	209	548	39	725	166	930	169	140	56	365	159	773	48	980	2823
Grand Total	440	231	424	1095	89	1456	318	1863	309	266	136	711	311	1467	83	1861	5530
Apprch %	40.2	21.1	38.7		4.8	78.2	17.1		43.5	37.4	19.1		16.7	78.8	4.5		
Total %	8	4.2	7.7	19.8	1.6	26.3	5.8	33.7	5.6	4.8	2.5	12.9	5.6	26.5	1.5	33.7	
Passenger Vehicles	420	224	421	1065	82	1441	307	1830	306	258	136	700	311	1447	83	1841	5436
% Passenger Vehicles	95.5	97	99.3	97.3	92.1	99	96.5	98.2	99	97	100	98.5	100	98.6	100	98.9	98.3
Large 2 Axle Vehicles	19	7	2	28	7	14	11	32	3	8	0	11	0	20	0	20	91
% Large 2 Axle Vehicles	4.3	3	0.5	2.6	7.9	1	3.5	1.7	1	3	0	1.5	0	1.4	0	1.1	1.6
3 Axle Vehicles	1	0	0	1	0	1	0	1	0	0	0	0	0	0	0	0	2
% 3 Axle Vehicles	0.2	0	0	0.1	0	0.1	0	0.1	0	0	0	0	0	0	0	0	0
4+ Axle Trucks	0	0	1	1	0	0	0	0	0	0	0	0	0	0	0	0	1
% 4+ Axle Trucks	0	0	0.2	0.1	0	0	0	0	0	0	0	0	0	0	0	0	0

	Anderson Street Southbound				Barton Road Westbound				Anderson Street Northbound				Barton Road Eastbound				
Start Time	Left	Thru	Right	App. Total	Left	Thru	Right	App. Total	Left	Thru	Right	App. Total	Left	Thru	Right	App. Total	Int. Total
Peak Hour Analysis From 04:00 PM to 05:45 PM - Peak 1 of 1																	
Peak Hour for Entire Intersection Begins at 04:30 PM																	
04:30 PM	60	26	71	157	**15**	198	36	249	39	28	**24**	91	34	185	12	231	728
04:45 PM	60	33	52	145	13	181	**45**	239	35	30	21	86	**41**	197	13	251	721
05:00 PM	**74**	24	**75**	**173**	11	**208**	38	**257**	**70**	**44**	21	**135**	41	**226**	**16**	**283**	**848**
05:15 PM	54	**35**	62	151	13	186	44	243	39	28	13	80	36	202	12	250	724
Total Volume	248	118	260	626	52	773	163	988	183	130	79	392	152	810	53	1015	3021
% App. Total	39.6	18.8	41.5		5.3	78.2	16.5		46.7	33.2	20.2		15	79.8	5.2		
PHF	.838	.843	.867	.905	.867	.929	.906	.961	.654	.739	.823	.726	.927	.896	.828	.897	.891

Counts Unlimited Inc.
PO Box 1178
Corona, CA 92878
(951) 268-6268

City of Loma Linda
N/S: Anderson Street
E/W: Barton Road
Weather: Sunny

File Name : LMLANBAPM
Site Code : 00000097
Start Date : 10/12/2011
Page No : 2

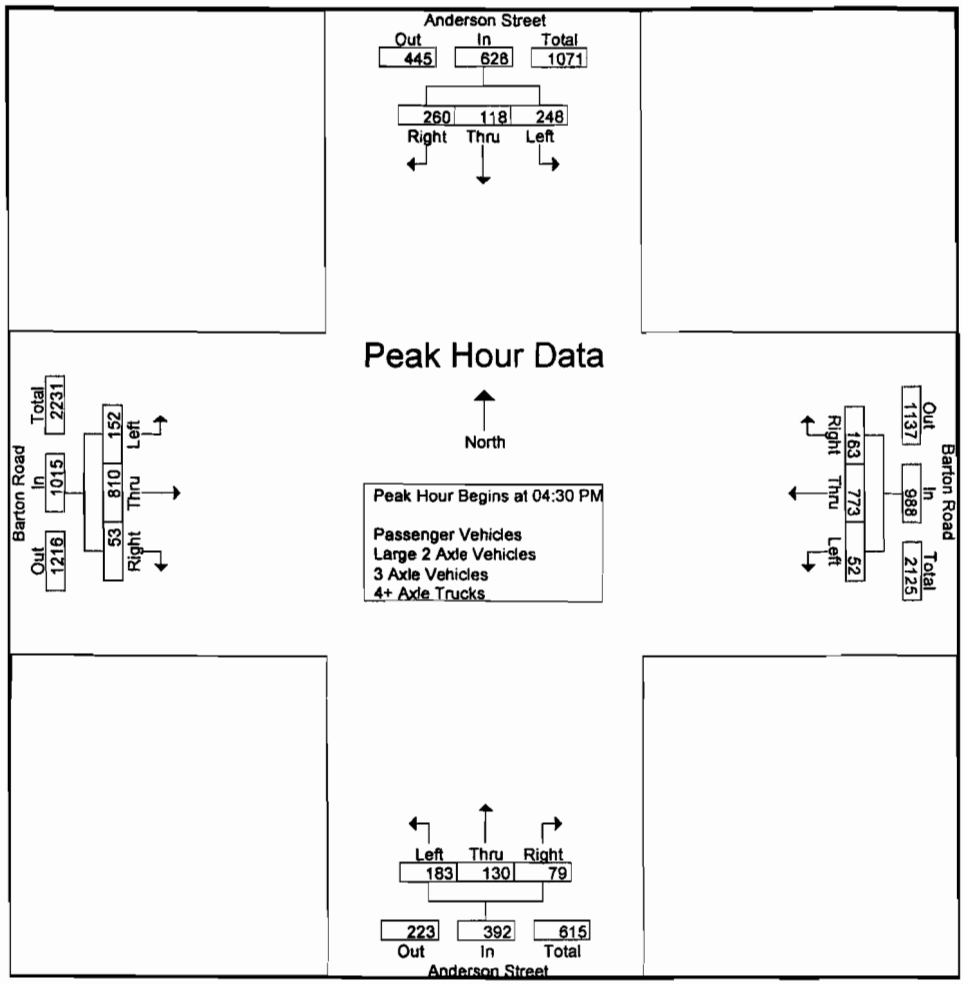

Peak Hour Analysis From 04:00 PM to 05:45 PM - Peak 1 of 1

Peak Hour for Each Approach Begins at:

	04:30 PM				04:30 PM				04:15 PM				04:45 PM			
+0 mins.	60	26	71	157	**15**	198	36	249	32	37	17	86	**41**	197	13	251
+15 mins.	60	33	52	145	13	181	**45**	239	39	28	**24**	91	41	**226**	**16**	**283**
+30 mins.	**74**	24	**75**	**173**	11	**208**	38	**257**	35	30	21	86	36	202	12	250
+45 mins.	54	**35**	62	151	13	186	44	243	**70**	**44**	21	**135**	39	180	13	232
Total Volume	248	118	260	626	52	773	163	988	176	139	83	398	157	805	54	1016
% App. Total	39.6	18.8	41.5		5.3	78.2	16.5		44.2	34.9	20.9		15.5	79.2	5.3	
PHF	.838	.843	.867	.905	.867	.929	.906	.961	.629	.790	.865	.737	.957	.890	.844	.898

Counts Unlimited Inc.
PO Box 1178
Corona, CA 92878
(951) 268-6268

City of Loma Linda
N/S: Anderson Street
E/W: Barton Road
Weather: Sunny

File Name : LMLANBAPM
Site Code : 00000097
Start Date : 10/12/2011
Page No : 1

Groups Printed- Passenger Vehicles

	Anderson Street Southbound				Barton Road Westbound				Anderson Street Northbound				Barton Road Eastbound				
Start Time	Left	Thru	Right	App. Total	Left	Thru	Right	App. Total	Left	Thru	Right	App. Total	Left	Thru	Right	App. Total	Int. Total
04:00 PM	52	31	46	129	9	183	31	223	34	28	18	80	34	155	6	195	627
04:15 PM	40	24	46	110	10	164	37	211	31	36	17	84	43	155	4	202	607
04:30 PM	54	26	70	150	15	195	34	244	38	28	24	90	34	183	12	229	713
04:45 PM	57	32	51	140	12	179	44	235	35	29	21	85	41	192	13	246	706
Total	203	113	213	529	46	721	146	913	138	121	80	339	152	685	35	872	2653
05:00 PM	73	23	75	171	10	207	37	254	69	43	21	133	41	224	16	281	839
05:15 PM	51	34	61	146	12	185	43	240	39	28	13	80	36	201	12	249	715
05:30 PM	44	23	41	108	6	164	36	206	35	36	11	82	39	177	13	229	625
05:45 PM	49	31	31	111	8	164	45	217	25	30	11	66	43	160	7	210	604
Total	217	111	208	536	36	720	161	917	168	137	56	361	159	762	48	969	2783
Grand Total	420	224	421	1065	82	1441	307	1830	306	258	136	700	311	1447	83	1841	5436
Apprch %	39.4	21	39.5		4.5	78.7	16.8		43.7	36.9	19.4		16.9	78.6	4.5		
Total %	7.7	4.1	7.7	19.6	1.5	26.5	5.6	33.7	5.6	4.7	2.5	12.9	5.7	26.6	1.5	33.9	

	Anderson Street Southbound				Barton Road Westbound				Anderson Street Northbound				Barton Road Eastbound				
Start Time	Left	Thru	Right	App. Total	Left	Thru	Right	App. Total	Left	Thru	Right	App. Total	Left	Thru	Right	App. Total	Int. Total
Peak Hour Analysis From 04:30 PM to 05:15 PM - Peak 1 of 1																	
Peak Hour for Entire Intersection Begins at 04:30 PM																	
04:30 PM	54	26	70	150	**15**	195	34	244	38	28	**24**	90	34	183	12	229	713
04:45 PM	57	32	51	140	12	179	**44**	235	35	29	21	85	**41**	192	13	246	706
05:00 PM	**73**	23	**75**	**171**	10	**207**	37	**254**	**69**	**43**	21	**133**	41	**224**	**16**	**281**	**839**
05:15 PM	51	**34**	61	146	12	185	43	240	39	28	13	80	36	201	12	249	715
Total Volume	235	115	257	607	49	766	158	973	181	128	79	388	152	800	53	1005	2973
% App. Total	38.7	18.9	42.3		5	78.7	16.2		46.6	33	20.4		15.1	79.6	5.3		
PHF	.805	.846	.857	.887	.817	.925	.898	.958	.656	.744	.823	.729	.927	.893	.828	.894	.886

Counts Unlimited Inc.
PO Box 1178
Corona, CA 92878
(951) 268-6268

City of Loma Linda
N/S: Anderson Street
E/W: Barton Road
Weather: Sunny

File Name : LMLANBAPM
Site Code : 00000097
Start Date : 10/12/2011
Page No : 2

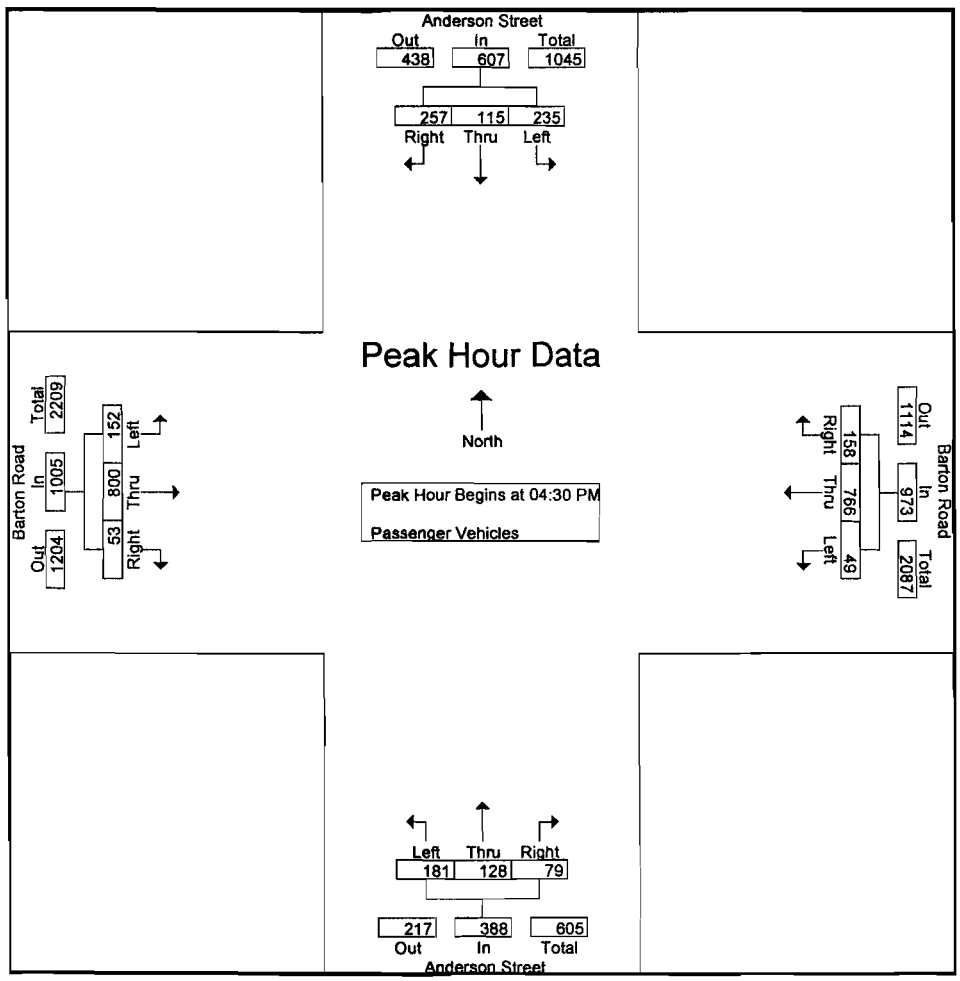

Peak Hour Analysis From 04:30 PM to 05:15 PM - Peak 1 of 1

Peak Hour for Each Approach Begins at:

	04:30 PM				04:30 PM				04:30 PM				04:30 PM			
+0 mins.	54	26	70	150	**15**	195	**34**	244	38	28	**24**	90	34	183	12	229
+15 mins.	57	32	51	140	12	179	**44**	235	35	29	21	85	**41**	192	13	246
+30 mins.	**73**	23	**75**	**171**	10	**207**	37	**254**	**69**	**43**	21	**133**	41	**224**	**16**	**281**
+45 mins.	51	**34**	61	146	12	185	43	240	39	28	13	80	36	201	12	249
Total Volume	235	115	257	607	49	766	158	973	181	128	79	388	152	800	53	1005
% App. Total	38.7	18.9	42.3		5	78.7	16.2		46.6	33	20.4		15.1	79.6	5.3	
PHF	.805	.846	.857	.887	.817	.925	.898	.958	.656	.744	.823	.729	.927	.893	.828	.894

Counts Unlimited Inc.
PO Box 1178
Corona, CA 92878
(951) 268-6268

City of Loma Linda
N/S: Anderson Street
E/W: Barton Road
Weather: Sunny

File Name : LMLANBAPM
Site Code : 00000097
Start Date : 10/12/2011
Page No : 1

Groups Printed- Large 2 Axle Vehicles

	Anderson Street Southbound				Barton Road Westbound				Anderson Street Northbound				Barton Road Eastbound				
Start Time	Left	Thru	Right	App. Total	Left	Thru	Right	App. Total	Left	Thru	Right	App. Total	Left	Thru	Right	App. Total	Int. Total
04:00 PM	2	2	0	4	2	2	1	5	0	3	0	3	0	1	0	1	13
04:15 PM	1	1	0	2	1	3	2	6	1	1	0	2	0	1	0	1	11
04:30 PM	6	0	0	6	0	3	2	5	1	0	0	1	0	2	0	2	14
04:45 PM	3	1	1	5	1	2	1	4	0	1	0	1	0	5	0	5	15
Total	12	4	1	17	4	10	6	20	2	5	0	7	0	9	0	9	53
05:00 PM	0	1	0	1	1	0	1	2	1	1	0	2	0	2	0	2	7
05:15 PM	3	1	1	5	1	1	1	3	0	0	0	0	0	1	0	1	9
05:30 PM	3	0	0	3	0	3	2	5	0	1	0	1	0	3	0	3	12
05:45 PM	1	1	0	2	1	0	1	2	0	1	0	1	0	5	0	5	10
Total	7	3	1	11	3	4	5	12	1	3	0	4	0	11	0	11	38
Grand Total	19	7	2	28	7	14	11	32	3	8	0	11	0	20	0	20	91
Apprch %	67.9	25	7.1		21.9	43.8	34.4		27.3	72.7	0		0	100	0		
Total %	20.9	7.7	2.2	30.8	7.7	15.4	12.1	35.2	3.3	8.8	0	12.1	0	22	0	22	

	Anderson Street Southbound				Barton Road Westbound				Anderson Street Northbound				Barton Road Eastbound				
Start Time	Left	Thru	Right	App. Total	Left	Thru	Right	App. Total	Left	Thru	Right	App. Total	Left	Thru	Right	App. Total	Int. Total
Peak Hour Analysis From 04:30 PM to 05:15 PM - Peak 1 of 1																	
Peak Hour for Entire Intersection Begins at 04:30 PM																	
04:30 PM	6	0	0	6	0	3	2	5	1	0	0	1	0	2	0	2	14
04:45 PM	3	1	1	5	1	2	1	4	0	1	0	1	0	5	0	5	15
05:00 PM	0	1	0	1	1	0	1	2	1	1	0	2	0	2	0	2	7
05:15 PM	3	1	1	5	1	1	1	3	0	0	0	0	0	1	0	1	9
Total Volume	12	3	2	17	3	6	5	14	2	2	0	4	0	10	0	10	45
% App. Total	70.6	17.6	11.8		21.4	42.9	35.7		50	50	0		0	100	0		
PHF	.500	.750	.500	.708	.750	.500	.625	.700	.500	.500	.000	.500	.000	.500	.000	.500	.750

Counts Unlimited Inc.
PO Box 1178
Corona, CA 92878
(951) 268-6268

City of Loma Linda
N/S: Anderson Street
E/W: Barton Road
Weather: Sunny

File Name : LMLANBAPM
Site Code : 00000097
Start Date : 10/12/2011
Page No : 2

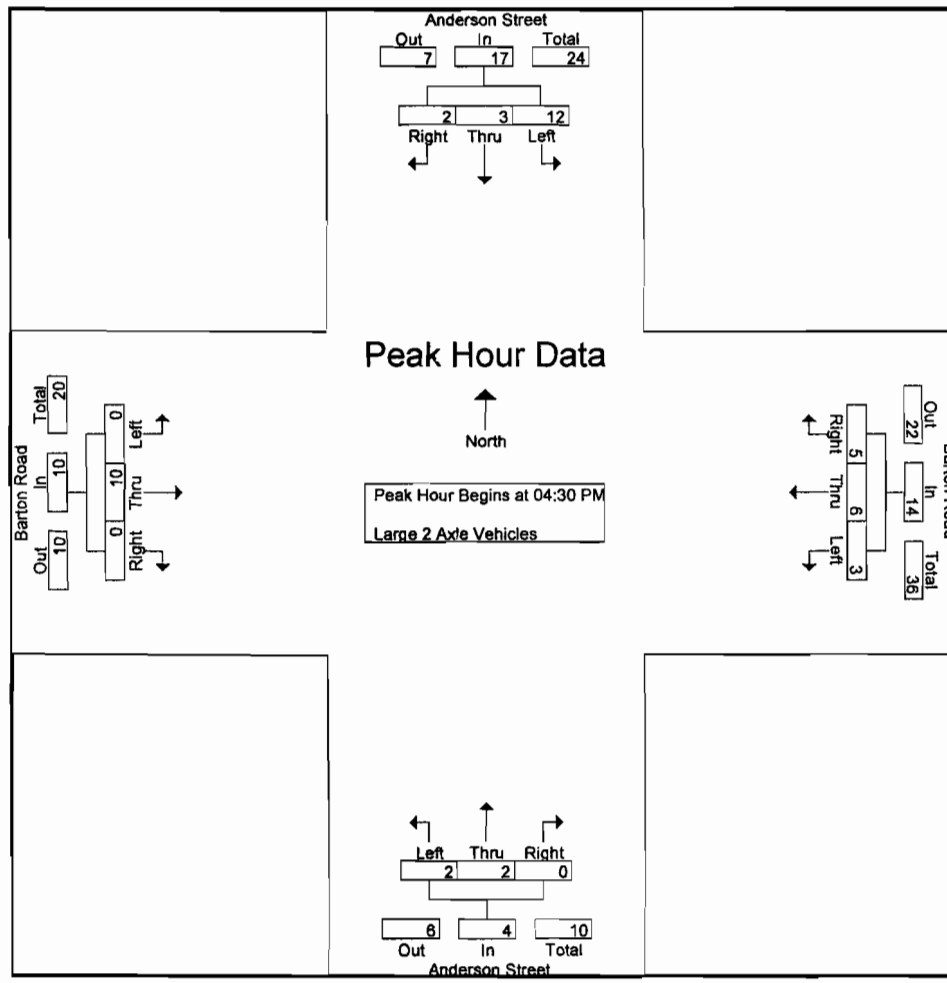

Peak Hour Analysis From 04:30 PM to 05:15 PM - Peak 1 of 1

Peak Hour for Each Approach Begins at:

	04:30 PM				04:30 PM				04:30 PM				04:30 PM			
+0 mins.	6	0	0	6	0	3	2	5	1	0	0	1	0	2	0	2
+15 mins.	3	1	1	5	1	2	1	4	0	1	0	1	0	5	0	5
+30 mins.	0	1	0	1	1	0	1	2	1	1	0	2	0	2	0	2
+45 mins.	3	1	1	5	1	1	1	3	0	0	0	0	0	1	0	1
Total Volume	12	3	2	17	3	6	5	14	2	2	0	4	0	10	0	10
% App. Total	70.6	17.6	11.8		21.4	42.9	35.7		50	50	0		0	100	0	
PHF	.500	.750	.500	.708	.750	.500	.625	.700	.500	.500	.000	.500	.000	.500	.000	.500

Counts Unlimited Inc.
PO Box 1178
Corona, CA 92878
(951) 268-6268

City of Loma Linda
N/S: Anderson Street
E/W: Barton Road
Weather: Sunny

File Name : LMLANBAPM
Site Code : 00000097
Start Date : 10/12/2011
Page No : 1

Groups Printed- 3 Axle Vehicles

	Anderson Street Southbound				Barton Road Westbound				Anderson Street Northbound				Barton Road Eastbound				
Start Time	Left	Thru	Right	App. Total	Left	Thru	Right	App. Total	Left	Thru	Right	App. Total	Left	Thru	Right	App. Total	Int. Total
04:00 PM	0	0	0	0	0	0	0	0	0	0	0	0	0	0	0	0	0
04:15 PM	0	0	0	0	0	0	0	0	0	0	0	0	0	0	0	0	0
04:30 PM	0	0	0	0	0	0	0	0	0	0	0	0	0	0	0	0	0
04:45 PM	0	0	0	0	0	0	0	0	0	0	0	0	0	0	0	0	0
Total	0	0	0	0	0	0	0	0	0	0	0	0	0	0	0	0	0
05:00 PM	1	0	0	1	0	1	0	1	0	0	0	0	0	0	0	0	2
05:15 PM	0	0	0	0	0	0	0	0	0	0	0	0	0	0	0	0	0
05:30 PM	0	0	0	0	0	0	0	0	0	0	0	0	0	0	0	0	0
05:45 PM	0	0	0	0	0	0	0	0	0	0	0	0	0	0	0	0	0
Total	1	0	0	1	0	1	0	1	0	0	0	0	0	0	0	0	2
Grand Total	1	0	0	1	0	1	0	1	0	0	0	0	0	0	0	0	2
Apprch %	100	0	0		0	100	0		0	0	0		0	0	0		
Total %	50	0	0	50	0	50	0	50	0	0	0	0	0	0	0	0	

	Anderson Street Southbound				Barton Road Westbound				Anderson Street Northbound				Barton Road Eastbound				
Start Time	Left	Thru	Right	App. Total	Left	Thru	Right	App. Total	Left	Thru	Right	App. Total	Left	Thru	Right	App. Total	Int. Total
Peak Hour Analysis From 04:30 PM to 05:15 PM - Peak 1 of 1																	
Peak Hour for Entire Intersection Begins at 04:30 PM																	
04:30 PM	0	0	0	0	0	0	0	0	0	0	0	0	0	0	0	0	0
04:45 PM	0	0	0	0	0	0	0	0	0	0	0	0	0	0	0	0	0
05:00 PM	1	0	0	1	0	1	0	1	0	0	0	0	0	0	0	0	2
05:15 PM	0	0	0	0	0	0	0	0	0	0	0	0	0	0	0	0	0
Total Volume	1	0	0	1	0	1	0	1	0	0	0	0	0	0	0	0	2
% App. Total	100	0	0		0	100	0		0	0	0		0	0	0		
PHF	.250	.000	.000	.250	.000	.250	.000	.250	.000	.000	.000	.000	.000	.000	.000	.000	.250

Counts Unlimited Inc.
PO Box 1178
Corona, CA 92878
(951) 268-6268

City of Loma Linda
N/S: Anderson Street
E/W: Barton Road
Weather: Sunny

File Name : LMLANBAPM
Site Code : 00000097
Start Date : 10/12/2011
Page No : 2

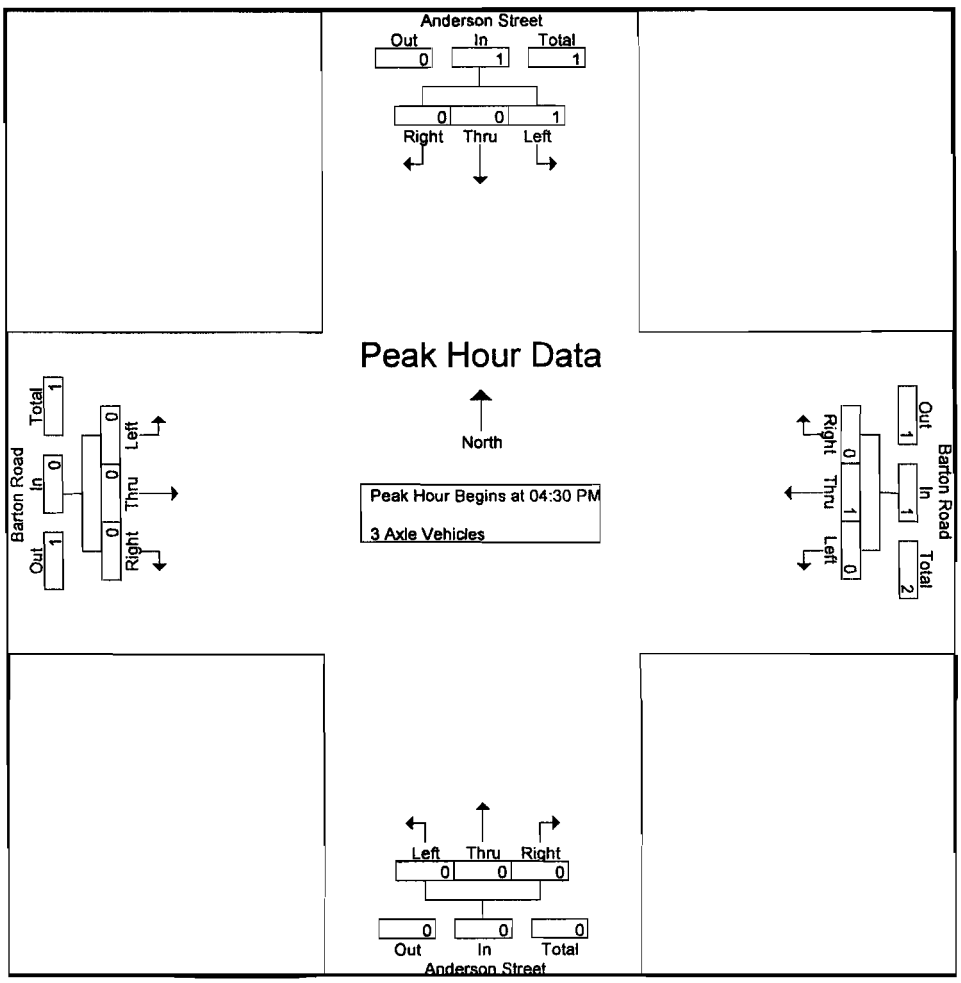

Peak Hour Analysis From 04:30 PM to 05:15 PM - Peak 1 of 1

Peak Hour for Each Approach Begins at:

	04:30 PM				04:30 PM				04:30 PM				04:30 PM			
+0 mins.	0	0	0	0	0	0	0	0	0	0	0	0	0	0	0	0
+15 mins.	0	0	0	0	0	0	0	0	0	0	0	0	0	0	0	0
+30 mins.	1	0	0	1	0	1	0	1	0	0	0	0	0	0	0	0
+45 mins.	0	0	0	0	0	0	0	0	0	0	0	0	0	0	0	0
Total Volume	1	0	0	1	0	1	0	1	0	0	0	0	0	0	0	0
% App. Total	100	0	0		0	100	0		0	0	0		0	0	0	
PHF	.250	.000	.000	.250	.000	.250	.000	.250	.000	.000	.000	.000	.000	.000	.000	.000

Counts Unlimited Inc.
PO Box 1178
Corona, CA 92878
(951) 268-6268

City of Loma Linda
N/S: Anderson Street
E/W: Barton Road
Weather: Sunny

File Name : LMLANBAPM
Site Code : 00000097
Start Date : 10/12/2011
Page No : 1

Groups Printed- 4+ Axle Trucks

	Anderson Street Southbound				Barton Road Westbound				Anderson Street Northbound				Barton Road Eastbound				
Start Time	Left	Thru	Right	App. Total	Left	Thru	Right	App. Total	Left	Thru	Right	App. Total	Left	Thru	Right	App. Total	Int. Total
04:00 PM	0	0	0	0	0	0	0	0	0	0	0	0	0	0	0	0	0
04:15 PM	0	0	0	0	0	0	0	0	0	0	0	0	0	0	0	0	0
04:30 PM	0	0	1	1	0	0	0	0	0	0	0	0	0	0	0	0	1
04:45 PM	0	0	0	0	0	0	0	0	0	0	0	0	0	0	0	0	0
Total	0	0	1	1	0	0	0	0	0	0	0	0	0	0	0	0	1
05:00 PM	0	0	0	0	0	0	0	0	0	0	0	0	0	0	0	0	0
05:15 PM	0	0	0	0	0	0	0	0	0	0	0	0	0	0	0	0	0
05:30 PM	0	0	0	0	0	0	0	0	0	0	0	0	0	0	0	0	0
05:45 PM	0	0	0	0	0	0	0	0	0	0	0	0	0	0	0	0	0
Total	0	0	0	0	0	0	0	0	0	0	0	0	0	0	0	0	0
Grand Total	0	0	1	1	0	0	0	0	0	0	0	0	0	0	0	0	1
Apprch %	0	0	100		0	0	0		0	0	0		0	0	0		
Total %	0	0	100	100	0	0	0	0	0	0	0	0	0	0	0	0	

	Anderson Street Southbound				Barton Road Westbound				Anderson Street Northbound				Barton Road Eastbound				
Start Time	Left	Thru	Right	App. Total	Left	Thru	Right	App. Total	Left	Thru	Right	App. Total	Left	Thru	Right	App. Total	Int. Total
Peak Hour Analysis From 04:30 PM to 05:15 PM - Peak 1 of 1																	
Peak Hour for Entire Intersection Begins at 04:30 PM																	
04:30 PM	0	0	**1**	**1**	0	0	0	0	0	0	0	0	0	0	0	0	**1**
04:45 PM	0	0	0	0	0	0	0	0	0	0	0	0	0	0	0	0	0
05:00 PM	0	0	0	0	0	0	0	0	0	0	0	0	0	0	0	0	0
05:15 PM	0	0	0	0	0	0	0	0	0	0	0	0	0	0	0	0	0
Total Volume	0	0	1	1	0	0	0	0	0	0	0	0	0	0	0	0	1
% App. Total	0	0	100		0	0	0		0	0	0		0	0	0		
PHF	.000	.000	.250	.250	.000	.000	.000	.000	.000	.000	.000	.000	.000	.000	.000	.000	.250

Counts Unlimited Inc.
PO Box 1178
Corona, CA 92878
(951) 268-6268

City of Loma Linda
N/S: Anderson Street
E/W: Barton Road
Weather: Sunny

File Name : LMLANBAPM
Site Code : 00000097
Start Date : 10/12/2011
Page No : 2

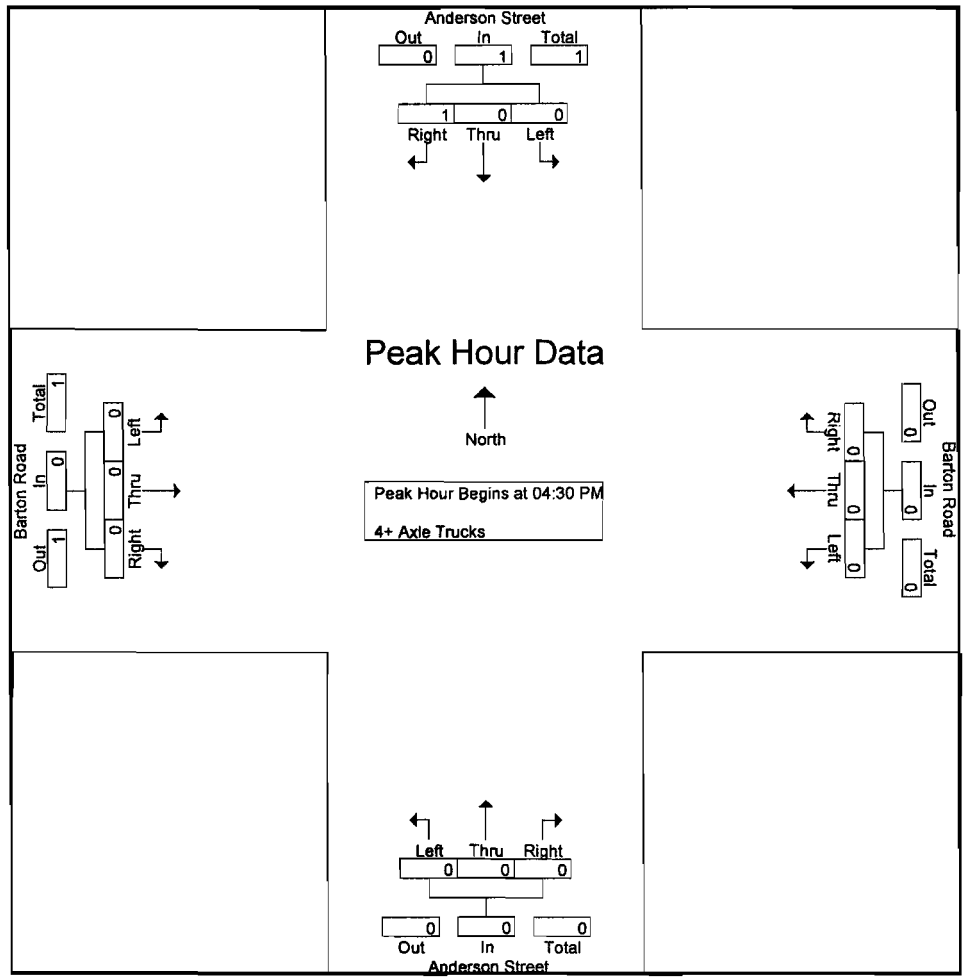

Peak Hour Analysis From 04:30 PM to 05:15 PM - Peak 1 of 1

Peak Hour for Each Approach Begins at:

	04:30 PM				04:30 PM				04:30 PM				04:30 PM			
+0 mins.	0	0	1	1	0	0	0	0	0	0	0	0	0	0	0	0
+15 mins.	0	0	0	0	0	0	0	0	0	0	0	0	0	0	0	0
+30 mins.	0	0	0	0	0	0	0	0	0	0	0	0	0	0	0	0
+45 mins.	0	0	0	0	0	0	0	0	0	0	0	0	0	0	0	0
Total Volume	0	0	1	1	0	0	0	0	0	0	0	0	0	0	0	0
% App. Total	0	0	100		0	0	0		0	0	0		0	0	0	
PHF	.000	.000	.250	.250	.000	.000	.000	.000	.000	.000	.000	.000	.000	.000	.000	.000

Year 2013

Counts Unlimited Inc.
PO Box 1178
Corona, CA 92878
(951) 268-6268

City of Loma Linda
N/S: Campus Street
E/W: Barton Road
Weather: Sunny

File Name : LMLCABAAM
Site Code : 00000097
Start Date : 4/10/2013
Page No : 1

Groups Printed- Passenger Vehicles - Large 2 Axle Vehicles - 3 Axle Vehicles - 4+ Axle Trucks

	Campus Street Southbound				Barton Road Westbound				Campus Street Northbound				Barton Road Eastbound				
Start Time	Left	Thru	Right	App. Total	Left	Thru	Right	App. Total	Left	Thru	Right	App. Total	Left	Thru	Right	App. Total	Int. Total
07:00 AM	17	4	3	24	3	78	60	141	18	15	3	36	19	131	3	153	354
07:15 AM	23	7	7	37	1	112	70	183	12	22	3	37	25	182	9	216	473
07:30 AM	44	4	11	59	9	110	95	214	27	16	11	54	25	223	12	260	587
07:45 AM	28	6	9	43	9	151	119	279	27	43	5	75	21	289	12	322	719
Total	112	21	30	163	22	451	344	817	84	96	22	202	90	825	36	951	2133
08:00 AM	41	2	10	53	2	151	94	247	14	15	1	30	24	177	10	211	541
08:15 AM	30	5	9	44	2	108	65	175	26	11	2	39	27	200	4	231	489
08:30 AM	34	3	2	39	6	97	66	169	13	14	4	31	21	181	5	207	446
08:45 AM	24	3	13	40	1	96	52	149	10	18	5	33	31	185	8	224	446
Total	129	13	34	176	11	452	277	740	63	58	12	133	103	743	27	873	1922
Grand Total	241	34	64	339	33	903	621	1557	147	154	34	335	193	1568	63	1824	4055
Apprch %	71.1	10	18.9		2.1	58	39.9		43.9	46	10.1		10.6	86	3.5		
Total %	5.9	0.8	1.6	8.4	0.8	22.3	15.3	38.4	3.6	3.8	0.8	8.3	4.8	38.7	1.6	45	
Passenger Vehicles	226	33	58	317	31	887	599	1517	146	153	33	332	174	1543	62	1779	3945
% Passenger Vehicles	93.8	97.1	90.6	93.5	93.9	98.2	96.5	97.4	99.3	99.4	97.1	99.1	90.2	98.4	98.4	97.5	97.3
Large 2 Axle Vehicles	14	1	4	19	2	14	21	37	1	1	1	3	17	22	1	40	99
% Large 2 Axle Vehicles	5.8	2.9	6.2	5.6	6.1	1.6	3.4	2.4	0.7	0.6	2.9	0.9	8.8	1.4	1.6	2.2	2.4
3 Axle Vehicles	0	0	2	2	0	2	1	3	0	0	0	0	1	3	0	4	9
% 3 Axle Vehicles	0	0	3.1	0.6	0	0.2	0.2	0.2	0	0	0	0	0.5	0.2	0	0.2	0.2
4+ Axle Trucks	1	0	0	1	0	0	0	0	0	0	0	0	1	0	0	1	2
% 4+ Axle Trucks	0.4	0	0	0.3	0	0	0	0	0	0	0	0	0.5	0	0	0.1	0

	Campus Street Southbound				Barton Road Westbound				Campus Street Northbound				Barton Road Eastbound				
Start Time	Left	Thru	Right	App. Total	Left	Thru	Right	App. Total	Left	Thru	Right	App. Total	Left	Thru	Right	App. Total	Int. Total
Peak Hour Analysis From 07:00 AM to 08:45 AM - Peak 1 of 1																	
Peak Hour for Entire Intersection Begins at 07:30 AM																	
07:30 AM	**44**	4	**11**	**59**	**9**	110	95	214	**27**	16	**11**	54	25	223	**12**	260	587
07:45 AM	28	**6**	9	43	9	**151**	**119**	**279**	27	**43**	5	**75**	21	**289**	12	**322**	**719**
08:00 AM	41	2	10	53	2	151	94	247	14	15	1	30	24	177	10	211	541
08:15 AM	30	5	9	44	2	108	65	175	26	11	2	39	**27**	200	4	231	489
Total Volume	143	17	39	199	22	520	373	915	94	85	19	198	97	889	38	1024	2336
% App. Total	71.9	8.5	19.6		2.4	56.8	40.8		47.5	42.9	9.6		9.5	86.8	3.7		
PHF	.813	.708	.886	.843	.611	861	.784	.820	.870	.494	.432	.660	.898	.769	.792	.795	.812

Counts Unlimited Inc.
PO Box 1178
Corona, CA 92878
(951) 268-6268

City of Loma Linda
N/S: Campus Street
E/W: Barton Road
Weather: Sunny

File Name : LMLCABAAM
Site Code : 00000097
Start Date : 4/10/2013
Page No : 2

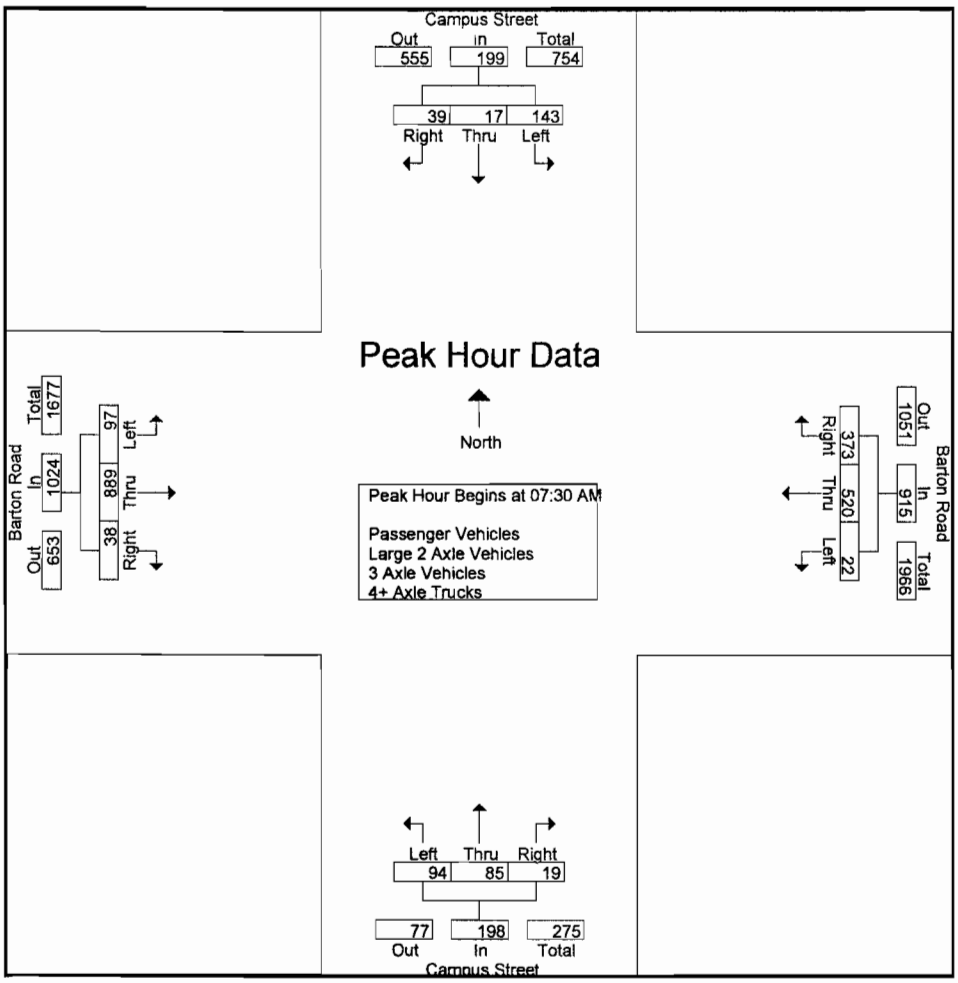

Peak Hour Analysis From 07:00 AM to 08:45 AM - Peak 1 of 1

Peak Hour for Each Approach Begins at:

	07:30 AM				07:15 AM				07:00 AM				07:30 AM			
+0 mins.	**44**	4	**11**	**59**	1	112	70	183	18	15	3	36	25	223	**12**	260
+15 mins.	28	**6**	9	43	**9**	110	95	214	12	22	3	37	21	**289**	12	**322**
+30 mins.	41	2	10	53	9	**151**	**119**	**279**	**27**	16	**11**	54	24	177	10	211
+45 mins.	30	5	9	44	2	151	94	247	27	**43**	5	**75**	**27**	200	4	231
Total Volume	143	17	39	199	21	524	378	923	84	96	22	202	97	889	38	1024
% App. Total	71.9	8.5	19.6		2.3	56.8	41		41.6	47.5	10.9		9.5	86.8	3.7	
PHF	.813	.708	.886	.843	.583	.868	.794	.827	.778	.558	.500	.673	.898	.769	.792	.795

Counts Unlimited Inc.
PO Box 1178
Corona, CA 92878
(951) 268-6268

City of Loma Linda
N/S: Campus Street
E/W: Barton Road
Weather: Sunny

File Name : LMLCABAAM
Site Code : 00000097
Start Date : 4/10/2013
Page No : 1

Groups Printed- Passenger Vehicles

	Campus Street Southbound				Barton Road Westbound				Campus Street Northbound				Barton Road Eastbound				
Start Time	Left	Thru	Right	App. Total	Left	Thru	Right	App. Total	Left	Thru	Right	App. Total	Left	Thru	Right	App. Total	Int. Total
07:00 AM	17	4	3	24	3	78	59	140	18	15	3	36	17	129	3	149	349
07:15 AM	23	7	7	37	1	109	66	176	12	22	3	37	24	179	9	212	462
07:30 AM	40	4	11	55	9	109	93	211	27	16	10	53	22	219	12	253	572
07:45 AM	27	5	7	39	8	149	118	275	27	42	5	74	20	286	12	318	706
Total	107	20	28	155	21	445	336	802	84	95	21	200	83	813	36	932	2089
08:00 AM	39	2	10	51	1	147	90	238	14	15	1	30	23	173	9	205	524
08:15 AM	29	5	8	42	2	106	60	168	25	11	2	38	23	196	4	223	471
08:30 AM	29	3	2	34	6	96	63	165	13	14	4	31	18	179	5	202	432
08:45 AM	22	3	10	35	1	93	50	144	10	18	5	33	27	182	8	217	429
Total	119	13	30	162	10	442	263	715	62	58	12	132	91	730	26	847	1856
Grand Total	226	33	58	317	31	887	599	1517	146	153	33	332	174	1543	62	1779	3945
Apprch %	71.3	10.4	18.3		2	58.5	39.5		44	46.1	9.9		9.8	86.7	3.5		
Total %	5.7	0.8	1.5	8	0.8	22.5	15.2	38.5	3.7	3.9	0.8	8.4	4.4	39.1	1.6	45.1	

	Campus Street Southbound				Barton Road Westbound				Campus Street Northbound				Barton Road Eastbound				
Start Time	Left	Thru	Right	App. Total	Left	Thru	Right	App. Total	Left	Thru	Right	App. Total	Left	Thru	Right	App. Total	Int. Total
Peak Hour Analysis From 07:30 AM to 08:15 AM - Peak 1 of 1																	
Peak Hour for Entire Intersection Begins at 07:30 AM																	
07:30 AM	40	4	11	55	9	109	93	211	27	16	10	53	22	219	12	253	572
07:45 AM	27	5	7	39	8	149	118	275	27	42	5	74	20	286	12	318	706
08:00 AM	39	2	10	51	1	147	90	238	14	15	1	30	23	173	9	205	524
08:15 AM	29	5	8	42	2	106	60	168	25	11	2	38	23	196	4	223	471
Total Volume	135	16	36	187	20	511	361	892	93	84	18	195	88	874	37	999	2273
% App. Total	72.2	8.6	19.3		2.2	57.3	40.5		47.7	43.1	9.2		8.8	87.5	3.7		
PHF	.844	.800	.818	.850	.556	.857	.765	.811	.861	.500	.450	.659	.957	.764	.771	.785	.805

Counts Unlimited Inc.
PO Box 1178
Corona, CA 92878
(951) 268-6268

City of Loma Linda
N/S: Campus Street
E/W: Barton Road
Weather: Sunny

File Name : LMLCABAAM
Site Code : 00000097
Start Date : 4/10/2013
Page No : 2

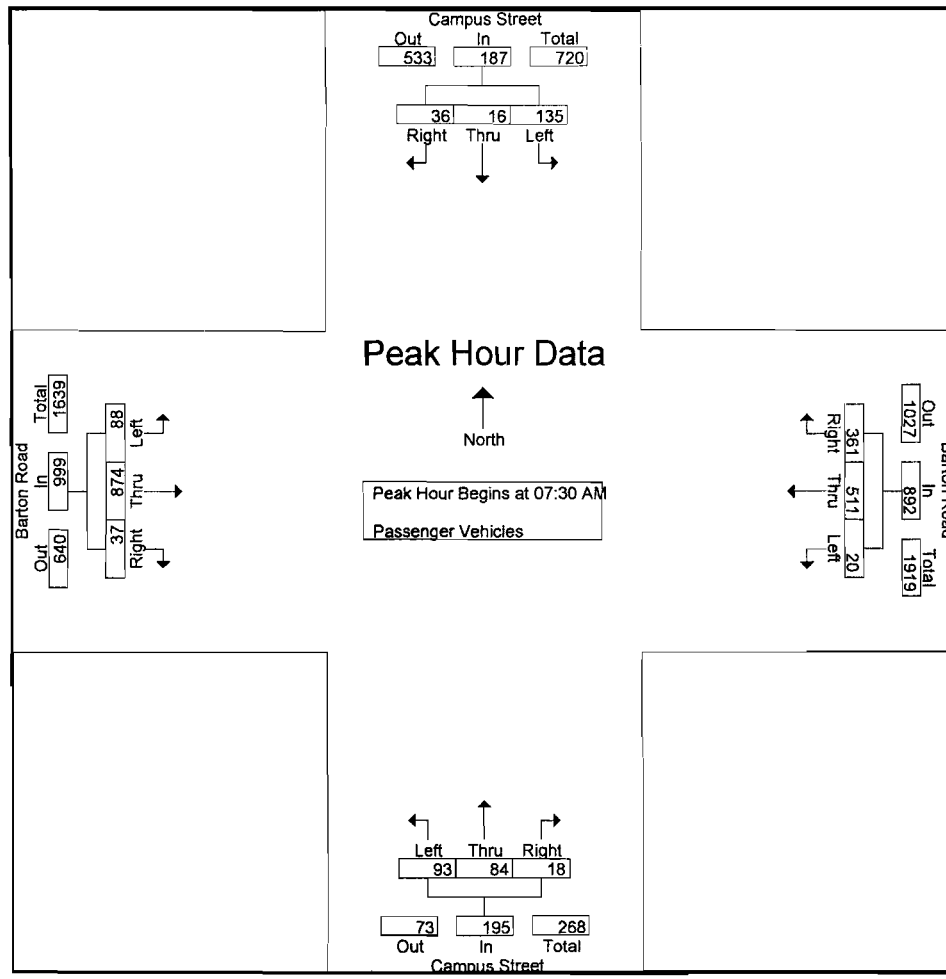

Peak Hour Analysis From 07:30 AM to 08:15 AM - Peak 1 of 1

Peak Hour for Each Approach Begins at:

	07:30 AM				07:30 AM				07:30 AM				07:30 AM			
+0 mins.	**40**	4	**11**	**55**	**9**	109	93	211	**27**	16	**10**	53	22	219	**12**	253
+15 mins.	27	**5**	7	39	8	**149**	**118**	**275**	27	**42**	5	**74**	20	**286**	12	**318**
+30 mins.	39	2	10	51	1	147	90	238	14	15	1	30	**23**	173	9	205
+45 mins.	29	5	8	42	2	106	60	168	25	11	2	38	23	196	4	223
Total Volume	135	16	36	187	20	511	361	892	93	84	18	195	88	874	37	999
% App. Total	72.2	8.6	19.3		2.2	57.3	40.5		47.7	43.1	9.2		8.8	87.5	3.7	
PHF	.844	.800	.818	.850	.556	.857	.765	.811	.861	.500	.450	.659	.957	.764	.771	.785

Counts Unlimited Inc.
PO Box 1178
Corona, CA 92878
(951) 268-6268

City of Loma Linda
N/S: Campus Street
E/W: Barton Road
Weather: Sunny

File Name : LMLCABAAM
Site Code : 00000097
Start Date : 4/10/2013
Page No : 1

Groups Printed- Large 2 Axle Vehicles

	Campus Street Southbound				Barton Road Westbound				Campus Street Northbound				Barton Road Eastbound				
Start Time	Left	Thru	Right	App. Total	Left	Thru	Right	App. Total	Left	Thru	Right	App. Total	Left	Thru	Right	App. Total	Int. Total
07:00 AM	0	0	0	0	0	0	1	1	0	0	0	0	2	2	0	4	5
07:15 AM	0	0	0	0	0	3	4	7	0	0	0	0	1	1	0	2	9
07:30 AM	4	0	0	4	0	1	1	2	0	0	1	1	3	4	0	7	14
07:45 AM	1	1	1	3	1	2	1	4	0	1	0	1	1	3	0	4	12
Total	5	1	1	7	1	6	7	14	0	1	1	2	7	10	0	17	40
08:00 AM	2	0	0	2	1	3	4	8	0	0	0	0	1	3	1	5	15
08:15 AM	1	0	1	2	0	2	5	7	1	0	0	1	2	4	0	6	16
08:30 AM	5	0	0	5	0	1	3	4	0	0	0	0	3	2	0	5	14
08:45 AM	1	0	2	3	0	2	2	4	0	0	0	0	4	3	0	7	14
Total	9	0	3	12	1	8	14	23	1	0	0	1	10	12	1	23	59
Grand Total	14	1	4	19	2	14	21	37	1	1	1	3	17	22	1	40	99
Apprch %	73.7	5.3	21.1		5.4	37.8	56.8		33.3	33.3	33.3		42.5	55	2.5		
Total %	14.1	1	4	19.2	2	14.1	21.2	37.4	1	1	1	3	17.2	22.2	1	40.4	

	Campus Street Southbound				Barton Road Westbound				Campus Street Northbound				Barton Road Eastbound				
Start Time	Left	Thru	Right	App. Total	Left	Thru	Right	App. Total	Left	Thru	Right	App. Total	Left	Thru	Right	App. Total	Int. Total
Peak Hour Analysis From 07:30 AM to 08:15 AM - Peak 1 of 1																	
Peak Hour for Entire Intersection Begins at 07:30 AM																	
07:30 AM	4	0	0	4	0	1	1	2	0	0	1	1	3	4	0	7	14
07:45 AM	1	1	1	3	1	2	1	4	0	1	0	1	1	3	0	4	12
08:00 AM	2	0	0	2	1	3	4	8	0	0	0	0	1	3	1	5	15
08:15 AM	1	0	1	2	0	2	5	7	1	0	0	1	2	4	0	6	16
Total Volume	8	1	2	11	2	8	11	21	1	1	1	3	7	14	1	22	57
% App. Total	72.7	9.1	18.2		9.5	38.1	52.4		33.3	33.3	33.3		31.8	63.6	4.5		
PHF	.500	.250	.500	.688	.500	.667	.550	.656	.250	.250	.250	.750	.583	.875	.250	.786	.891

Counts Unlimited Inc.
PO Box 1178
Corona, CA 92878
(951) 268-6268

City of Loma Linda
N/S: Campus Street
E/W: Barton Road
Weather: Sunny

File Name : LMLCABAAM
Site Code : 00000097
Start Date : 4/10/2013
Page No : 2

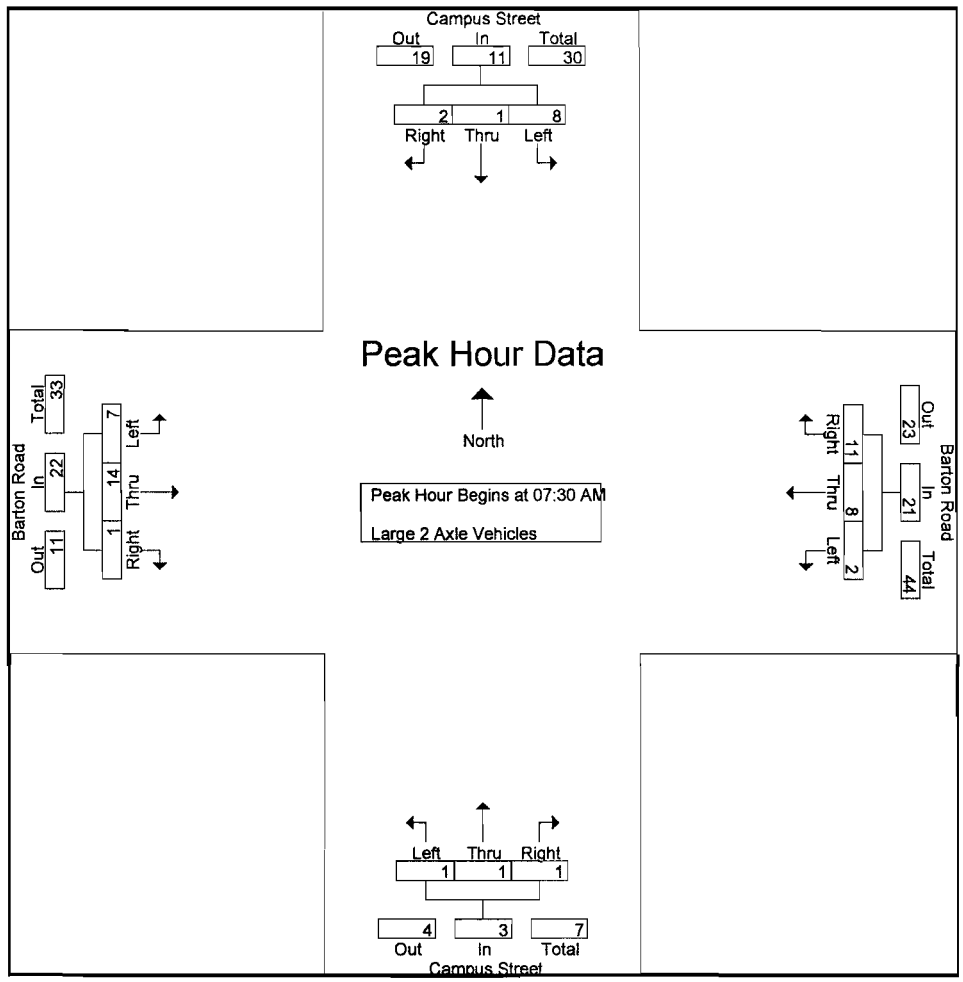

Peak Hour Analysis From 07:30 AM to 08:15 AM - Peak 1 of 1

Peak Hour for Each Approach Begins at:

	07:30 AM				07:30 AM				07:30 AM				07:30 AM			
+0 mins.	4	0	0	4	0	1	1	2	0	0	1	1	3	4	0	7
+15 mins.	1	1	1	3	1	2	1	4	0	1	0	1	1	3	0	4
+30 mins.	2	0	0	2	1	3	4	8	0	0	0	0	1	3	1	5
+45 mins.	1	0	1	2	0	2	5	7	1	0	0	1	2	4	0	6
Total Volume	8	1	2	11	2	8	11	21	1	1	1	3	7	14	1	22
% App. Total	72.7	9.1	18.2		9.5	38.1	52.4		33.3	33.3	33.3		31.8	63.6	4.5	
PHF	.500	.250	.500	.688	.500	.667	.550	.656	.250	.250	.250	.750	.583	.875	.250	.786

Counts Unlimited Inc.
PO Box 1178
Corona, CA 92878
(951) 268-6268

City of Loma Linda
N/S: Campus Street
E/W: Barton Road
Weather: Sunny

File Name : LMLCABAAM
Site Code : 00000097
Start Date : 4/10/2013
Page No : 1

Groups Printed- 3 Axle Vehicles

	Campus Street Southbound				Barton Road Westbound				Campus Street Northbound				Barton Road Eastbound				
Start Time	Left	Thru	Right	App. Total	Left	Thru	Right	App. Total	Left	Thru	Right	App. Total	Left	Thru	Right	App. Total	Int. Total
07:00 AM	0	0	0	0	0	0	0	0	0	0	0	0	0	0	0	0	0
07:15 AM	0	0	0	0	0	0	0	0	0	0	0	0	0	2	0	2	2
07:30 AM	0	0	0	0	0	0	1	1	0	0	0	0	0	0	0	0	1
07:45 AM	0	0	1	1	0	0	0	0	0	0	0	0	0	0	0	0	1
Total	0	0	1	1	0	0	1	1	0	0	0	0	0	2	0	2	4
08:00 AM	0	0	0	0	0	1	0	1	0	0	0	0	0	1	0	1	2
08:15 AM	0	0	0	0	0	0	0	0	0	0	0	0	1	0	0	1	1
08:30 AM	0	0	0	0	0	0	0	0	0	0	0	0	0	0	0	0	0
08:45 AM	0	0	1	1	0	1	0	1	0	0	0	0	0	0	0	0	2
Total	0	0	1	1	0	2	0	2	0	0	0	0	1	1	0	2	5
Grand Total	0	0	2	2	0	2	1	3	0	0	0	0	1	3	0	4	9
Apprch %	0	0	100		0	66.7	33.3		0	0	0		25	75	0		
Total %	0	0	22.2	22.2	0	22.2	11.1	33.3	0	0	0	0	11.1	33.3	0	44.4	

	Campus Street Southbound				Barton Road Westbound				Campus Street Northbound				Barton Road Eastbound				
Start Time	Left	Thru	Right	App. Total	Left	Thru	Right	App. Total	Left	Thru	Right	App. Total	Left	Thru	Right	App. Total	Int. Total
Peak Hour Analysis From 07:30 AM to 08:15 AM - Peak 1 of 1																	
Peak Hour for Entire Intersection Begins at 07:30 AM																	
07:30 AM	0	0	0	0	0	0	1	1	0	0	0	0	0	0	0	0	1
07:45 AM	0	0	1	1	0	0	0	0	0	0	0	0	0	0	0	0	1
08:00 AM	0	0	0	0	0	1	0	1	0	0	0	0	0	1	0	1	2
08:15 AM	0	0	0	0	0	0	0	0	0	0	0	0	1	0	0	1	1
Total Volume	0	0	1	1	0	1	1	2	0	0	0	0	1	1	0	2	5
% App. Total	0	0	100		0	50	50		0	0	0		50	50	0		
PHF	.000	.000	.250	.250	.000	.250	.250	.500	.000	.000	.000	.000	.250	.250	.000	.500	.625

Counts Unlimited Inc.
PO Box 1178
Corona, CA 92878
(951) 268-6268

City of Loma Linda
N/S: Campus Street
E/W: Barton Road
Weather: Sunny

File Name : LMLCABAAM
Site Code : 00000097
Start Date : 4/10/2013
Page No : 2

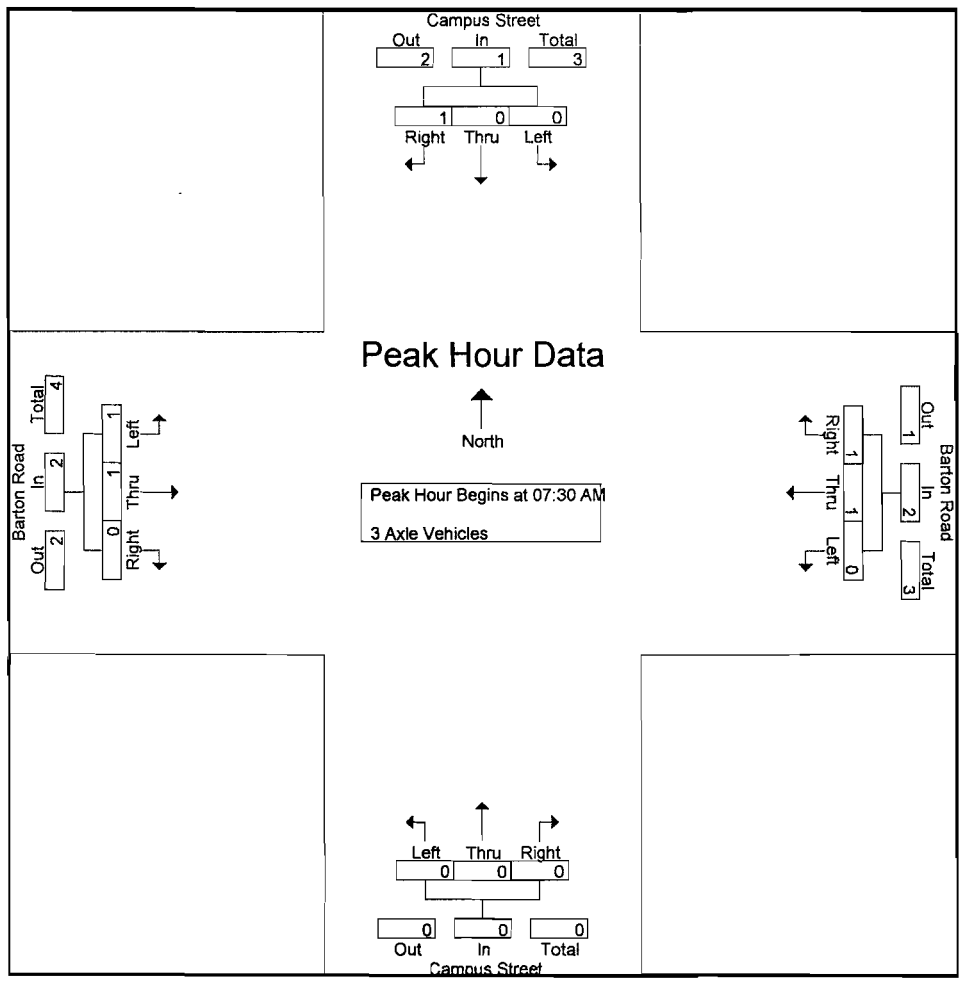

Peak Hour Analysis From 07:30 AM to 08:15 AM - Peak 1 of 1

Peak Hour for Each Approach Begins at:

	07:30 AM				07:30 AM				07:30 AM				07:30 AM			
+0 mins.	0	0	0	0	0	0	1	1	0	0	0	0	0	0	0	0
+15 mins.	0	0	1	1	0	0	0	0	0	0	0	0	0	0	0	0
+30 mins.	0	0	0	0	0	1	0	1	0	0	0	0	0	1	0	1
+45 mins.	0	0	0	0	0	0	0	0	0	0	0	0	1	0	0	1
Total Volume	0	0	1	1	0	1	1	2	0	0	0	0	1	1	0	2
% App. Total	0	0	100		0	50	50		0	0	0		50	50	0	
PHF	.000	.000	.250	.250	.000	.250	.250	.500	.000	.000	.000	.000	.250	.250	.000	.500

Counts Unlimited Inc.
PO Box 1178
Corona, CA 92878
(951) 268-6268

City of Loma Linda
N/S: Campus Street
E/W: Barton Road
Weather: Sunny

File Name : LMLCABAAM
Site Code : 00000097
Start Date : 4/10/2013
Page No : 1

Groups Printed- 4+ Axle Trucks

	Campus Street Southbound				Barton Road Westbound				Campus Street Northbound				Barton Road Eastbound				
Start Time	Left	Thru	Right	App. Total	Left	Thru	Right	App. Total	Left	Thru	Right	App. Total	Left	Thru	Right	App. Total	Int. Total
07:00 AM	0	0	0	0	0	0	0	0	0	0	0	0	0	0	0	0	0
07:15 AM	0	0	0	0	0	0	0	0	0	0	0	0	0	0	0	0	0
07:30 AM	0	0	0	0	0	0	0	0	0	0	0	0	0	0	0	0	0
07:45 AM	0	0	0	0	0	0	0	0	0	0	0	0	0	0	0	0	0
Total	0	0	0	0	0	0	0	0	0	0	0	0	0	0	0	0	0
08:00 AM	0	0	0	0	0	0	0	0	0	0	0	0	0	0	0	0	0
08:15 AM	0	0	0	0	0	0	0	0	0	0	0	0	1	0	0	1	1
08:30 AM	0	0	0	0	0	0	0	0	0	0	0	0	0	0	0	0	0
08:45 AM	1	0	0	1	0	0	0	0	0	0	0	0	0	0	0	0	1
Total	1	0	0	1	0	0	0	0	0	0	0	0	1	0	0	1	2
Grand Total	1	0	0	1	0	0	0	0	0	0	0	0	1	0	0	1	2
Apprch %	100	0	0		0	0	0		0	0	0		100	0	0		
Total %	50	0	0	50	0	0	0	0	0	0	0	0	50	0	0	50	

	Campus Street Southbound				Barton Road Westbound				Campus Street Northbound				Barton Road Eastbound				
Start Time	Left	Thru	Right	App. Total	Left	Thru	Right	App. Total	Left	Thru	Right	App. Total	Left	Thru	Right	App. Total	Int. Total
Peak Hour Analysis From 07:30 AM to 08:15 AM - Peak 1 of 1																	
Peak Hour for Entire Intersection Begins at 07:30 AM																	
07:30 AM	0	0	0	0	0	0	0	0	0	0	0	0	0	0	0	0	0
07:45 AM	0	0	0	0	0	0	0	0	0	0	0	0	0	0	0	0	0
08:00 AM	0	0	0	0	0	0	0	0	0	0	0	0	0	0	0	0	0
08:15 AM	0	0	0	0	0	0	0	0	0	0	0	0	1	0	0	1	1
Total Volume	0	0	0	0	0	0	0	0	0	0	0	0	1	0	0	1	1
% App. Total	0	0	0		0	0	0		0	0	0		100	0	0		
PHF	.000	.000	.000	.000	.000	.000	.000	.000	.000	.000	.000	.000	.250	.000	.000	.250	.250

Counts Unlimited Inc.
PO Box 1178
Corona, CA 92878
(951) 268-6268

City of Loma Linda
N/S: Campus Street
E/W: Barton Road
Weather: Sunny

File Name : LMLCABAAM
Site Code : 00000097
Start Date : 4/10/2013
Page No : 2

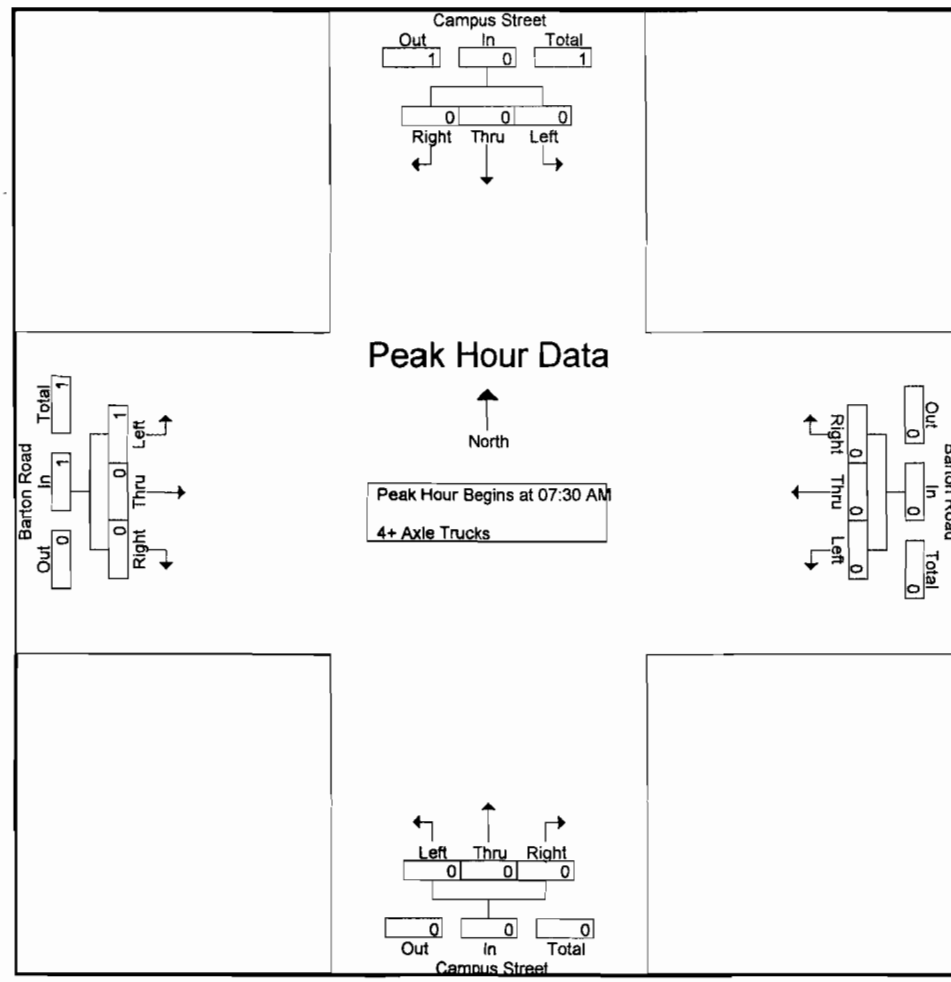

Peak Hour Analysis From 07:30 AM to 08:15 AM - Peak 1 of 1

Peak Hour for Each Approach Begins at:

	07:30 AM				07:30 AM				07:30 AM				07:30 AM			
+0 mins.	0	0	0	0	0	0	0	0	0	0	0	0	0	0	0	0
+15 mins.	0	0	0	0	0	0	0	0	0	0	0	0	0	0	0	0
+30 mins.	0	0	0	0	0	0	0	0	0	0	0	0	0	0	0	0
+45 mins.	0	0	0	0	0	0	0	0	0	0	0	0	1	0	0	1
Total Volume	0	0	0	0	0	0	0	0	0	0	0	0	1	0	0	1
% App. Total	0	0	0		0	0	0		0	0	0		100	0	0	
PHF	.000	.000	.000	.000	.000	.000	.000	.000	.000	.000	.000	.000	.250	.000	.000	.250

Counts Unlimited Inc.
PO Box 1178
Corona, CA 92878
(951) 268-6268

City of Loma Linda
N/S: Campus Street
E/W: Barton Road
Weather: Sunny

File Name : LMLCABAPM
Site Code : 00000097
Start Date : 4/10/2013
Page No : 1

Groups Printed- Passenger Vehicles - Large 2 Axle Vehicles - 3 Axle Vehicles - 4+ Axle Trucks

	Campus Street Southbound				Barton Road Westbound				Campus Street Northbound				Barton Road Eastbound				
Start Time	Left	Thru	Right	App. Total	Left	Thru	Right	App. Total	Left	Thru	Right	App. Total	Left	Thru	Right	App. Total	Int. Total
04:00 PM	71	13	20	104	5	254	30	289	15	1	5	21	7	130	6	143	557
04:15 PM	60	6	11	77	5	194	32	231	10	4	5	19	8	135	10	153	480
04:30 PM	64	9	16	89	3	267	33	303	14	5	3	22	16	147	13	176	590
04:45 PM	71	15	12	98	3	203	29	235	16	8	8	32	15	176	15	206	571
Total	266	43	59	368	16	918	124	1058	55	18	21	94	46	588	44	678	2198
05:00 PM	79	27	22	128	4	293	26	323	21	4	6	31	9	156	10	175	657
05:15 PM	77	16	19	112	4	227	54	285	21	5	7	33	10	185	13	208	638
05:30 PM	73	10	17	100	3	209	33	245	19	5	3	27	10	196	11	217	589
05:45 PM	33	8	18	59	1	181	35	217	16	6	4	26	14	178	13	205	507
Total	262	61	76	399	12	910	148	1070	77	20	20	117	43	715	47	805	2391
Grand Total	528	104	135	767	28	1828	272	2128	132	38	41	211	89	1303	91	1483	4589
Apprch %	68.8	13.6	17.6		1.3	85.9	12.8		62.6	18	19.4		6	87.9	6.1		
Total %	11.5	2.3	2.9	16.7	0.6	39.8	5.9	46.4	2.9	0.8	0.9	4.6	1.9	28.4	2	32.3	
Passenger Vehicles	517	104	131	752	28	1812	262	2102	132	38	41	211	77	1288	89	1454	4519
% Passenger Vehicles	97.9	100	97	98	100	99.1	96.3	98.8	100	100	100	100	86.5	98.8	97.8	98	98.5
Large 2 Axle Vehicles	11	0	4	15	0	14	10	24	0	0	0	0	12	15	2	29	68
% Large 2 Axle Vehicles	2.1	0	3	2	0	0.8	3.7	1.1	0	0	0	0	13.5	1.2	2.2	2	1.5
3 Axle Vehicles	0	0	0	0	0	1	0	1	0	0	0	0	0	0	0	0	1
% 3 Axle Vehicles	0	0	0	0	0	0.1	0	0	0	0	0	0	0	0	0	0	0
4+ Axle Trucks	0	0	0	0	0	1	0	1	0	0	0	0	0	0	0	0	1
% 4+ Axle Trucks	0	0	0	0	0	0.1	0	0	0	0	0	0	0	0	0	0	0

	Campus Street Southbound				Barton Road Westbound				Campus Street Northbound				Barton Road Eastbound				
Start Time	Left	Thru	Right	App. Total	Left	Thru	Right	App. Total	Left	Thru	Right	App. Total	Left	Thru	Right	App. Total	Int. Total
Peak Hour Analysis From 04:00 PM to 05:45 PM - Peak 1 of 1																	
Peak Hour for Entire Intersection Begins at 04:30 PM																	
04:30 PM	64	9	16	89	3	267	33	303	14	5	3	22	**16**	147	13	176	590
04:45 PM	71	15	12	98	3	203	29	235	16	**8**	**8**	32	15	176	**15**	206	571
05:00 PM	**79**	**27**	**22**	**128**	**4**	**293**	26	**323**	**21**	4	6	31	9	156	10	175	**657**
05:15 PM	77	16	19	112	4	227	**54**	285	21	5	7	**33**	10	**185**	13	**208**	638
Total Volume	291	67	69	427	14	990	142	1146	72	22	24	118	50	664	51	765	2456
% App. Total	68.1	15.7	16.2		1.2	86.4	12.4		61	18.6	20.3		6.5	86.8	6.7		
PHF	.921	.620	.784	.834	.875	.845	.657	.887	.857	.688	.750	.894	.781	.897	.850	.919	.935

Counts Unlimited Inc.
PO Box 1178
Corona, CA 92878
(951) 268-6268

City of Loma Linda
N/S: Campus Street
E/W: Barton Road
Weather: Sunny

File Name : LMLCABAPM
Site Code : 00000097
Start Date : 4/10/2013
Page No : 2

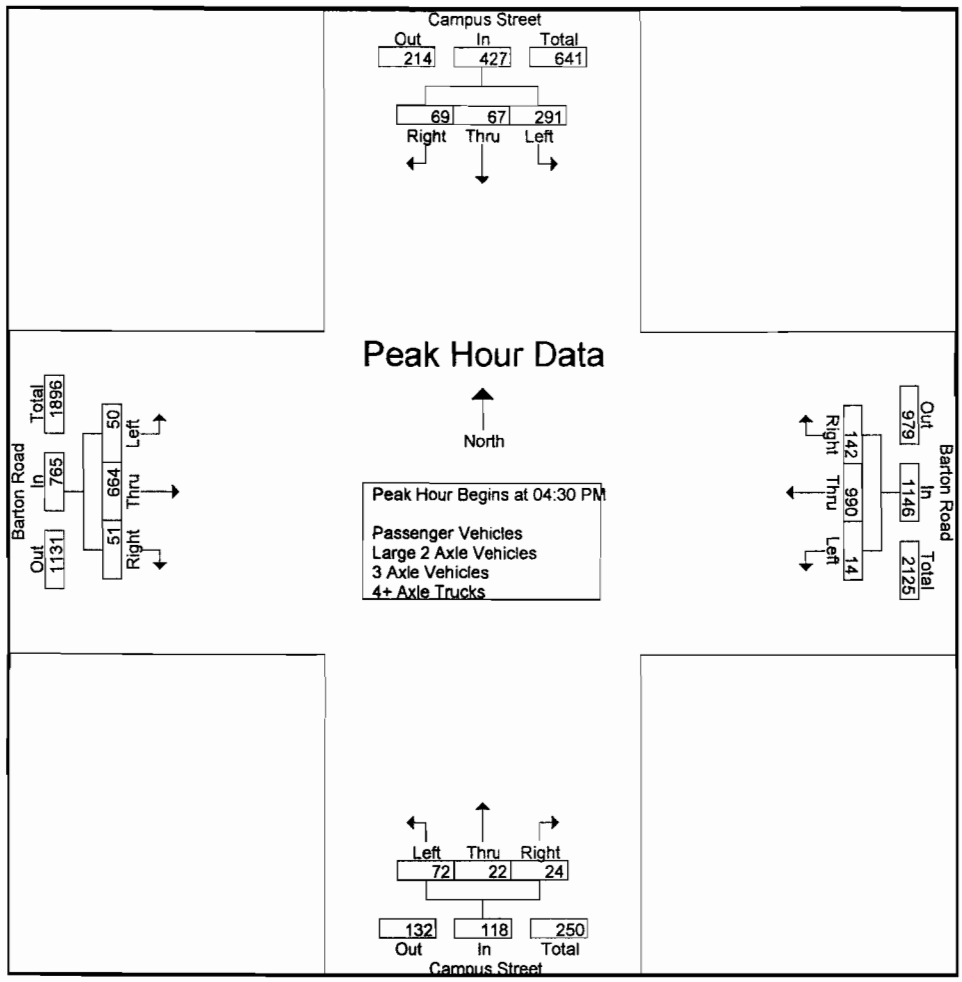

Peak Hour Analysis From 04:00 PM to 05:45 PM - Peak 1 of 1

Peak Hour for Each Approach Begins at:

	04:45 PM				04:30 PM				04:45 PM				04:45 PM			
+0 mins.	71	15	12	98	3	267	33	303	16	**8**	**8**	32	**15**	176	**15**	206
+15 mins.	**79**	**27**	**22**	**128**	3	203	29	235	**21**	4	6	31	9	156	10	175
+30 mins.	77	16	19	112	**4**	**293**	26	**323**	21	5	7	**33**	10	185	13	208
+45 mins.	73	10	17	100	4	227	**54**	285	19	5	3	27	10	**196**	11	**217**
Total Volume	300	68	70	438	14	990	142	1146	77	22	24	123	44	713	49	806
% App. Total	68.5	15.5	16		1.2	86.4	12.4		62.6	17.9	19.5		5.5	88.5	6.1	
PHF	.949	.630	.795	.855	.875	.845	.657	.887	.917	.688	.750	.932	.733	.909	.817	.929

Counts Unlimited Inc.
PO Box 1178
Corona, CA 92878
(951) 268-6268

City of Loma Linda
N/S: Campus Street
E/W: Barton Road
Weather: Sunny

File Name : LMLCABAPM
Site Code : 00000097
Start Date : 4/10/2013
Page No : 1

Groups Printed- Passenger Vehicles

	Campus Street Southbound				Barton Road Westbound				Campus Street Northbound				Barton Road Eastbound				
Start Time	Left	Thru	Right	App. Total	Left	Thru	Right	App. Total	Left	Thru	Right	App. Total	Left	Thru	Right	App. Total	Int. Total
04:00 PM	70	13	19	102	5	251	29	285	15	1	5	21	6	130	6	142	550
04:15 PM	59	6	11	76	5	194	31	230	10	4	5	19	5	132	10	147	472
04:30 PM	62	9	16	87	3	266	32	301	14	5	3	22	14	146	13	173	583
04:45 PM	70	15	12	97	3	201	27	231	16	8	8	32	12	172	15	199	559
Total	261	43	58	362	16	912	119	1047	55	18	21	94	37	580	44	661	2164
05:00 PM	77	27	20	124	4	289	25	318	21	4	6	31	9	154	9	172	645
05:15 PM	75	16	18	109	4	226	51	281	21	5	7	33	9	182	13	204	627
05:30 PM	71	10	17	98	3	207	33	243	19	5	3	27	8	195	10	213	581
05:45 PM	33	8	18	59	1	178	34	213	16	6	4	26	14	177	13	204	502
Total	256	61	73	390	12	900	143	1055	77	20	20	117	40	708	45	793	2355
Grand Total	517	104	131	752	28	1812	262	2102	132	38	41	211	77	1288	89	1454	4519
Apprch %	68.8	13.8	17.4		1.3	86.2	12.5		62.6	18	19.4		5.3	88.6	6.1		
Total %	11.4	2.3	2.9	16.6	0.6	40.1	5.8	46.5	2.9	0.8	0.9	4.7	1.7	28.5	2	32.2	

	Campus Street Southbound				Barton Road Westbound				Campus Street Northbound				Barton Road Eastbound				
Start Time	Left	Thru	Right	App. Total	Left	Thru	Right	App. Total	Left	Thru	Right	App. Total	Left	Thru	Right	App. Total	Int. Total
Peak Hour Analysis From 04:30 PM to 05:15 PM - Peak 1 of 1																	
Peak Hour for Entire Intersection Begins at 04:30 PM																	
04:30 PM	62	9	16	87	3	266	32	301	14	5	3	22	**14**	146	13	173	583
04:45 PM	70	15	12	97	3	201	27	231	16	**8**	**8**	32	12	172	**15**	199	559
05:00 PM	**77**	**27**	**20**	**124**	**4**	**289**	25	**318**	**21**	4	6	31	9	154	9	172	**645**
05:15 PM	75	16	18	109	4	226	**51**	281	21	5	7	**33**	9	**182**	13	**204**	627
Total Volume	284	67	66	417	14	982	135	1131	72	22	24	118	44	654	50	748	2414
% App. Total	68.1	16.1	15.8		1.2	86.8	11.9		61	18.6	20.3		5.9	87.4	6.7		
PHF	.922	.620	.825	.841	.875	.849	.662	.889	.857	.688	.750	.894	.786	.898	.833	.917	.936

Counts Unlimited Inc.
PO Box 1178
Corona, CA 92878
(951) 268-6268

City of Loma Linda
N/S: Campus Street
E/W: Barton Road
Weather: Sunny

File Name : LMLCABAPM
Site Code : 00000097
Start Date : 4/10/2013
Page No : 2

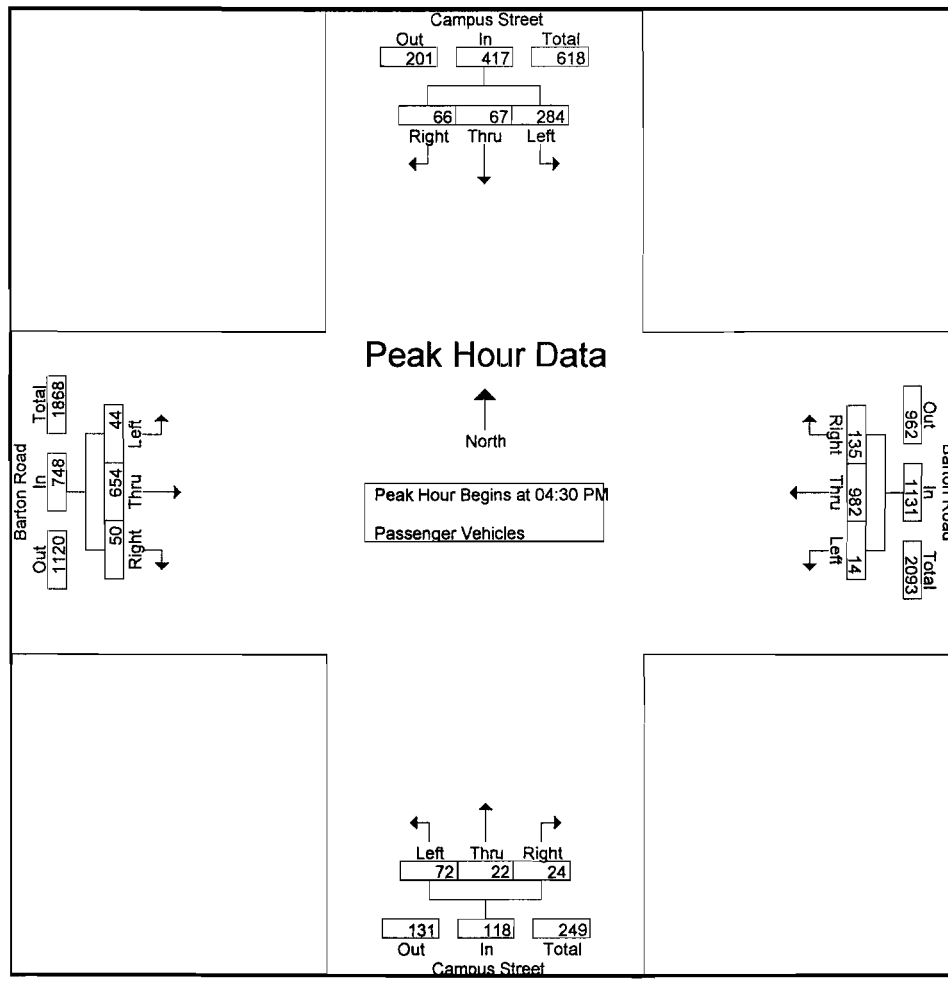

Peak Hour Analysis From 04:30 PM to 05:15 PM - Peak 1 of 1

Peak Hour for Each Approach Begins at:

	04:30 PM				04:30 PM				04:30 PM				04:30 PM			
+0 mins.	62	9	16	87	3	266	32	301	14	5	3	22	**14**	146	13	173
+15 mins.	70	15	12	97	3	201	27	231	16	**8**	**8**	32	12	172	**15**	199
+30 mins.	**77**	**27**	**20**	**124**	**4**	**289**	25	**318**	**21**	4	6	31	9	154	9	172
+45 mins.	75	16	18	109	4	226	**51**	281	21	5	7	**33**	9	**182**	13	**204**
Total Volume	284	67	66	417	14	982	135	1131	72	22	24	118	44	654	50	748
% App. Total	68.1	16.1	15.8		1.2	86.8	11.9		61	18.6	20.3		5.9	87.4	6.7	
PHF	.922	.620	.825	.841	.875	.849	.662	.889	.857	.688	.750	.894	.786	.898	.833	.917

Counts Unlimited Inc.
PO Box 1178
Corona, CA 92878
(951) 268-6268

City of Loma Linda
N/S: Campus Street
E/W: Barton Road
Weather: Sunny

File Name : LMLCABAPM
Site Code : 00000097
Start Date : 4/10/2013
Page No : 1

Groups Printed- Large 2 Axle Vehicles

	Campus Street Southbound				Barton Road Westbound				Campus Street Northbound				Barton Road Eastbound				
Start Time	Left	Thru	Right	App. Total	Left	Thru	Right	App. Total	Left	Thru	Right	App. Total	Left	Thru	Right	App. Total	Int. Total
04:00 PM	1	0	1	2	0	3	1	4	0	0	0	0	1	0	0	1	7
04:15 PM	1	0	0	1	0	0	1	1	0	0	0	0	3	3	0	6	8
04:30 PM	2	0	0	2	0	0	1	1	0	0	0	0	2	1	0	3	6
04:45 PM	1	0	0	1	0	2	2	4	0	0	0	0	3	4	0	7	12
Total	5	0	1	6	0	5	5	10	0	0	0	0	9	8	0	17	33
05:00 PM	2	0	2	4	0	4	1	5	0	0	0	0	0	2	1	3	12
05:15 PM	2	0	1	3	0	1	3	4	0	0	0	0	1	3	0	4	11
05:30 PM	2	0	0	2	0	2	0	2	0	0	0	0	2	1	1	4	8
05:45 PM	0	0	0	0	0	2	1	3	0	0	0	0	0	1	0	1	4
Total	6	0	3	9	0	9	5	14	0	0	0	0	3	7	2	12	35
Grand Total	11	0	4	15	0	14	10	24	0	0	0	0	12	15	2	29	68
Apprch %	73.3	0	26.7		0	58.3	41.7		0	0	0		41.4	51.7	6.9		
Total %	16.2	0	5.9	22.1	0	20.6	14.7	35.3	0	0	0	0	17.6	22.1	2.9	42.6	

	Campus Street Southbound				Barton Road Westbound				Campus Street Northbound				Barton Road Eastbound				
Start Time	Left	Thru	Right	App. Total	Left	Thru	Right	App. Total	Left	Thru	Right	App. Total	Left	Thru	Right	App. Total	Int. Total
Peak Hour Analysis From 04:30 PM to 05:15 PM - Peak 1 of 1																	
Peak Hour for Entire Intersection Begins at 04:30 PM																	
04:30 PM	2	0	0	2	0	0	1	1	0	0	0	0	2	1	0	3	6
04:45 PM	1	0	0	1	0	2	2	4	0	0	0	0	3	4	0	7	12
05:00 PM	2	0	2	4	0	4	1	5	0	0	0	0	0	2	1	3	12
05:15 PM	2	0	1	3	0	1	3	4	0	0	0	0	1	3	0	4	11
Total Volume	7	0	3	10	0	7	7	14	0	0	0	0	6	10	1	17	41
% App. Total	70	0	30		0	50	50		0	0	0		35.3	58.8	5.9		
PHF	.875	.000	.375	.625	.000	.438	.583	.700	.000	.000	.000	.000	.500	.625	.250	.607	.854

Counts Unlimited Inc.
PO Box 1178
Corona, CA 92878
(951) 268-6268

City of Loma Linda
N/S: Campus Street
E/W: Barton Road
Weather: Sunny

File Name : LMLCABAPM
Site Code : 00000097
Start Date : 4/10/2013
Page No : 2

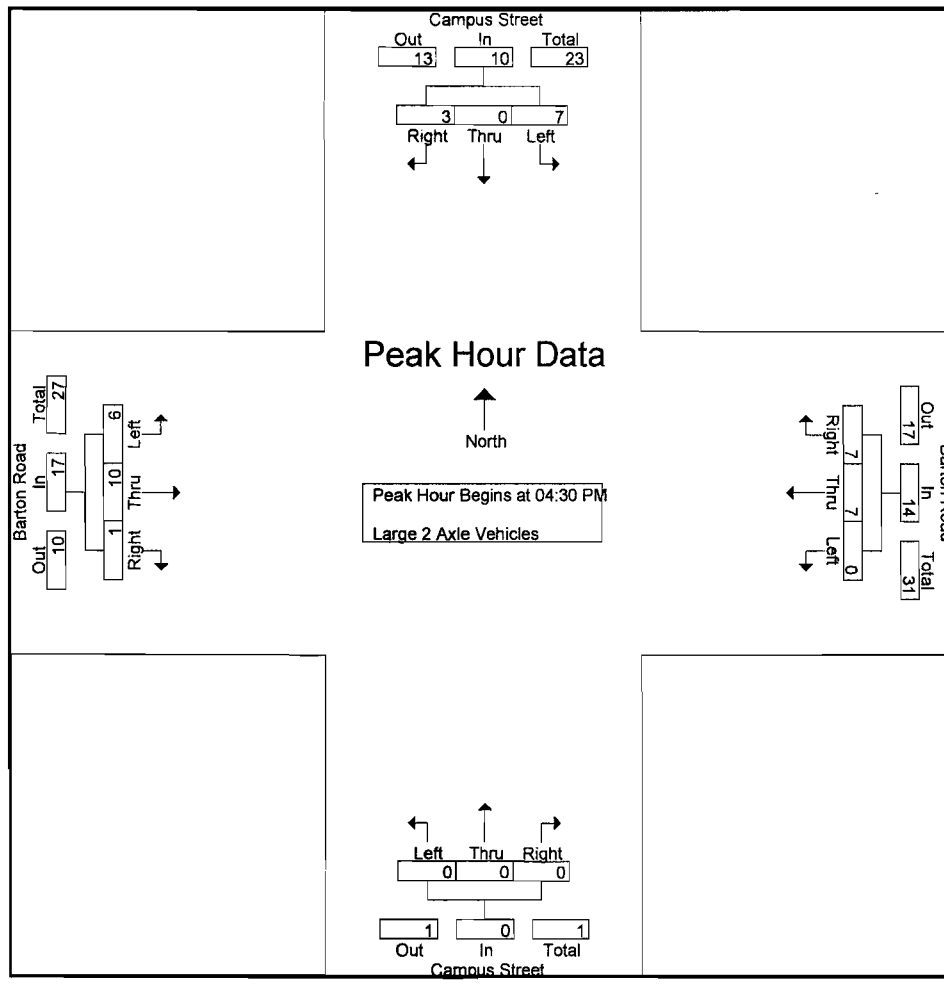

Peak Hour Analysis From 04:30 PM to 05:15 PM - Peak 1 of 1

Peak Hour for Each Approach Begins at:

	04:30 PM				04:30 PM				04:30 PM				04:30 PM			
+0 mins.	2	0	0	2	0	0	1	1	0	0	0	0	2	1	0	3
+15 mins.	1	0	0	1	0	2	2	4	0	0	0	0	3	4	0	7
+30 mins.	2	0	2	4	0	4	1	5	0	0	0	0	0	2	1	3
+45 mins.	2	0	1	3	0	1	3	4	0	0	0	0	1	3	0	4
Total Volume	7	0	3	10	0	7	7	14	0	0	0	0	6	10	1	17
% App. Total	70	0	30		0	50	50		0	0	0		35.3	58.8	5.9	
PHF	.875	.000	.375	.625	.000	.438	.583	.700	.000	.000	.000	.000	.500	.625	.250	.607

Counts Unlimited Inc.
PO Box 1178
Corona, CA 92878
(951) 268-6268

City of Loma Linda
N/S: Campus Street
E/W: Barton Road
Weather: Sunny

File Name : LMLCABAPM
Site Code : 00000097
Start Date : 4/10/2013
Page No : 1

Groups Printed- 3 Axle Vehicles

	Campus Street Southbound				Barton Road Westbound				Campus Street Northbound				Barton Road Eastbound				
Start Time	Left	Thru	Right	App. Total	Left	Thru	Right	App. Total	Left	Thru	Right	App. Total	Left	Thru	Right	App. Total	Int. Total
04:00 PM	0	0	0	0	0	0	0	0	0	0	0	0	0	0	0	0	0
04:15 PM	0	0	0	0	0	0	0	0	0	0	0	0	0	0	0	0	0
04:30 PM	0	0	0	0	0	0	0	0	0	0	0	0	0	0	0	0	0
04:45 PM	0	0	0	0	0	0	0	0	0	0	0	0	0	0	0	0	0
Total	0	0	0	0	0	0	0	0	0	0	0	0	0	0	0	0	0
05:00 PM	0	0	0	0	0	0	0	0	0	0	0	0	0	0	0	0	0
05:15 PM	0	0	0	0	0	0	0	0	0	0	0	0	0	0	0	0	0
05:30 PM	0	0	0	0	0	0	0	0	0	0	0	0	0	0	0	0	0
05:45 PM	0	0	0	0	0	1	0	1	0	0	0	0	0	0	0	0	1
Total	0	0	0	0	0	1	0	1	0	0	0	0	0	0	0	0	1
Grand Total	0	0	0	0	0	1	0	1	0	0	0	0	0	0	0	0	1
Apprch %	0	0	0		0	100	0		0	0	0		0	0	0		
Total %	0	0	0	0	0	100	0	100	0	0	0	0	0	0	0	0	

	Campus Street Southbound				Barton Road Westbound				Campus Street Northbound				Barton Road Eastbound				
Start Time	Left	Thru	Right	App. Total	Left	Thru	Right	App. Total	Left	Thru	Right	App. Total	Left	Thru	Right	App. Total	Int. Total
Peak Hour Analysis From 04:30 PM to 05:15 PM - Peak 1 of 1																	
Peak Hour for Entire Intersection Begins at 04:30 PM																	
04:30 PM	0	0	0	0	0	0	0	0	0	0	0	0	0	0	0	0	0
04:45 PM	0	0	0	0	0	0	0	0	0	0	0	0	0	0	0	0	0
05:00 PM	0	0	0	0	0	0	0	0	0	0	0	0	0	0	0	0	0
05:15 PM	0	0	0	0	0	0	0	0	0	0	0	0	0	0	0	0	0
Total Volume	0	0	0	0	0	0	0	0	0	0	0	0	0	0	0	0	0
% App. Total	0	0	0		0	0	0		0	0	0		0	0	0		
PHF	.000	.000	.000	.000	.000	.000	.000	.000	.000	.000	.000	.000	.000	.000	.000	.000	.000

Counts Unlimited Inc.
PO Box 1178
Corona, CA 92878
(951) 268-6268

City of Loma Linda
N/S: Campus Street
E/W: Barton Road
Weather: Sunny

File Name : LMLCABAPM
Site Code : 00000097
Start Date : 4/10/2013
Page No : 2

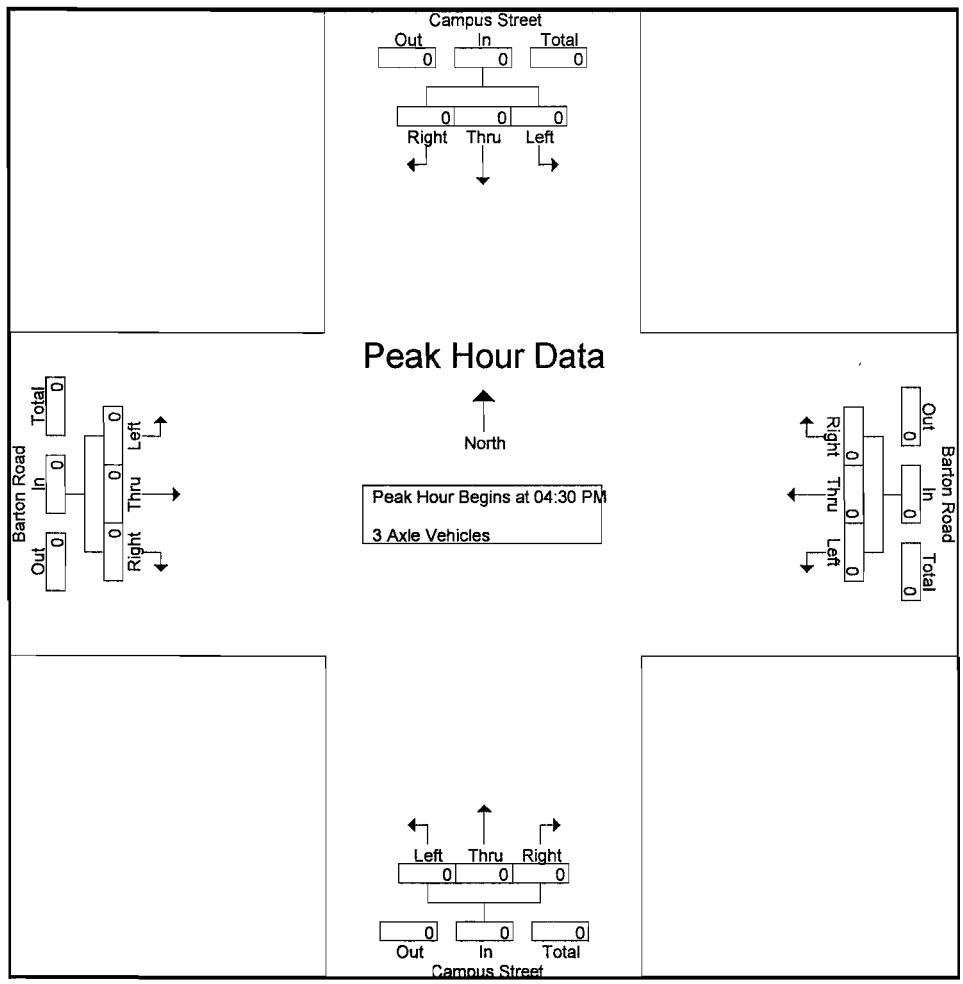

Peak Hour Analysis From 04:30 PM to 05:15 PM - Peak 1 of 1

Peak Hour for Each Approach Begins at:

	04:30 PM				04:30 PM				04:30 PM				04:30 PM			
+0 mins.	0	0	0	0	0	0	0	0	0	0	0	0	0	0	0	0
+15 mins.	0	0	0	0	0	0	0	0	0	0	0	0	0	0	0	0
+30 mins.	0	0	0	0	0	0	0	0	0	0	0	0	0	0	0	0
+45 mins.	0	0	0	0	0	0	0	0	0	0	0	0	0	0	0	0
Total Volume	0	0	0	0	0	0	0	0	0	0	0	0	0	0	0	0
% App. Total	0	0	0		0	0	0		0	0	0		0	0	0	
PHF	.000	.000	.000	.000	.000	.000	.000	.000	.000	.000	.000	.000	.000	.000	.000	.000

Counts Unlimited Inc.
PO Box 1178
Corona, CA 92878
(951) 268-6268

City of Loma Linda
N/S: Campus Street
E/W: Barton Road
Weather: Sunny

File Name : LMLCABAPM
Site Code : 00000097
Start Date : 4/10/2013
Page No : 1

Groups Printed- 4+ Axle Trucks

	Campus Street Southbound				Barton Road Westbound				Campus Street Northbound				Barton Road Eastbound				
Start Time	Left	Thru	Right	App. Total	Left	Thru	Right	App. Total	Left	Thru	Right	App. Total	Left	Thru	Right	App. Total	Int. Total
04:00 PM	0	0	0	0	0	0	0	0	0	0	0	0	0	0	0	0	0
04:15 PM	0	0	0	0	0	0	0	0	0	0	0	0	0	0	0	0	0
04:30 PM	0	0	0	0	0	1	0	1	0	0	0	0	0	0	0	0	1
04:45 PM	0	0	0	0	0	0	0	0	0	0	0	0	0	0	0	0	0
Total	0	0	0	0	0	1	0	1	0	0	0	0	0	0	0	0	1
05:00 PM	0	0	0	0	0	0	0	0	0	0	0	0	0	0	0	0	0
05:15 PM	0	0	0	0	0	0	0	0	0	0	0	0	0	0	0	0	0
05:30 PM	0	0	0	0	0	0	0	0	0	0	0	0	0	0	0	0	0
05:45 PM	0	0	0	0	0	0	0	0	0	0	0	0	0	0	0	0	0
Total	0	0	0	0	0	0	0	0	0	0	0	0	0	0	0	0	0
Grand Total	0	0	0	0	0	1	0	1	0	0	0	0	0	0	0	0	1
Apprch %	0	0	0		0	100	0		0	0	0		0	0	0		
Total %	0	0	0	0	0	100	0	100	0	0	0	0	0	0	0	0	

	Campus Street Southbound				Barton Road Westbound				Campus Street Northbound				Barton Road Eastbound				
Start Time	Left	Thru	Right	App. Total	Left	Thru	Right	App. Total	Left	Thru	Right	App. Total	Left	Thru	Right	App. Total	Int. Total
Peak Hour Analysis From 04:30 PM to 05:15 PM - Peak 1 of 1																	
Peak Hour for Entire Intersection Begins at 04:30 PM																	
04:30 PM	0	0	0	0	0	1	0	1	0	0	0	0	0	0	0	0	1
04:45 PM	0	0	0	0	0	0	0	0	0	0	0	0	0	0	0	0	0
05:00 PM	0	0	0	0	0	0	0	0	0	0	0	0	0	0	0	0	0
05:15 PM	0	0	0	0	0	0	0	0	0	0	0	0	0	0	0	0	0
Total Volume	0	0	0	0	0	1	0	1	0	0	0	0	0	0	0	0	1
% App. Total	0	0	0		0	100	0		0	0	0		0	0	0		
PHF	.000	.000	.000	.000	.000	.250	.000	.250	.000	.000	.000	.000	.000	.000	.000	.000	.250

Counts Unlimited Inc.
PO Box 1178
Corona, CA 92878
(951) 268-6268

City of Loma Linda
N/S: Campus Street
E/W: Barton Road
Weather: Sunny

File Name : LMLCABAPM
Site Code : 00000097
Start Date : 4/10/2013
Page No : 2

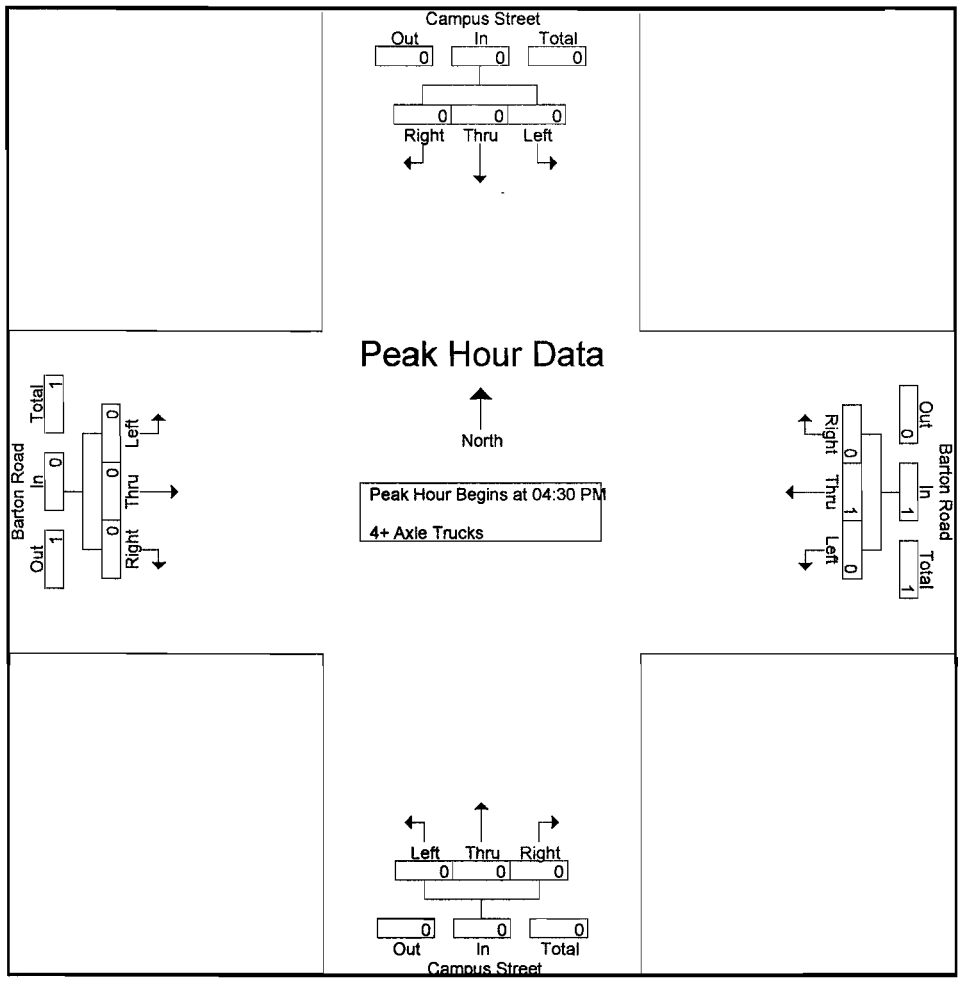

Peak Hour Analysis From 04:30 PM to 05:15 PM - Peak 1 of 1

Peak Hour for Each Approach Begins at:

	04:30 PM				04:30 PM				04:30 PM				04:30 PM			
+0 mins.	0	0	0	0	0	1	0	1	0	0	0	0	0	0	0	0
+15 mins.	0	0	0	0	0	0	0	0	0	0	0	0	0	0	0	0
+30 mins.	0	0	0	0	0	0	0	0	0	0	0	0	0	0	0	0
+45 mins.	0	0	0	0	0	0	0	0	0	0	0	0	0	0	0	0
Total Volume	0	0	0	0	0	1	0	1	0	0	0	0	0	0	0	0
% App. Total	0	0	0		0	100	0		0	0	0		0	0	0	
PHF	.000	.000	.000	.000	.000	.250	.000	.250	.000	.000	.000	.000	.000	.000	.000	.000

Counts Unlimited Inc.
PO Box 1178
Corona, CA 92878
(951) 268-6268

City of Loma Linda
N/S: Anderson Street
E/W: Barton Road
Weather: Sunny

File Name : LMLANBAAM
Site Code : 00000043
Start Date : 4/10/2013
Page No : 1

Groups Printed- Passenger Vehicles - Large 2 Axle Vehicles - 3 Axle Vehicles - 4+ Axle Trucks

	Anderson Street Southbound				Barton Road Westbound				Anderson Street Northbound				Barton Road Eastbound				
Start Time	Left	Thru	Right	App. Total	Left	Thru	Right	App. Total	Left	Thru	Right	App. Total	Left	Thru	Right	App. Total	Int. Total
07:00 AM	28	19	20	67	15	119	25	159	8	25	4	37	21	120	9	150	413
07:15 AM	23	19	28	70	20	138	35	193	17	27	2	46	35	159	17	211	520
07:30 AM	32	23	34	89	34	176	44	254	8	38	9	55	49	194	27	270	668
07:45 AM	35	45	52	132	40	214	62	316	24	51	5	80	81	209	38	328	856
Total	118	106	134	358	109	647	166	922	57	141	20	218	186	682	91	959	2457
08:00 AM	48	48	57	153	48	174	57	279	22	26	10	58	69	141	25	235	725
08:15 AM	36	33	38	107	30	122	43	195	21	22	9	52	59	149	24	232	586
08:30 AM	26	38	18	82	30	132	47	209	15	38	7	60	52	138	17	207	558
08:45 AM	33	37	19	89	46	110	48	204	15	25	10	50	47	145	15	207	550
Total	143	156	132	431	154	538	195	887	73	111	36	220	227	573	81	881	2419
Grand Total	261	262	266	789	263	1185	361	1809	130	252	56	438	413	1255	172	1840	4876
Apprch %	33.1	33.2	33.7		14.5	65.5	20		29.7	57.5	12.8		22.4	68.2	9.3		
Total %	5.4	5.4	5.5	16.2	5.4	24.3	7.4	37.1	2.7	5.2	1.1	9	8.5	25.7	3.5	37.7	
Passenger Vehicles	240	253	256	749	257	1167	351	1775	128	245	53	426	408	1226	169	1803	4753
% Passenger Vehicles	92	96.6	96.2	94.9	97.7	98.5	97.2	98.1	98.5	97.2	94.6	97.3	98.8	97.7	98.3	98	97.5
Large 2 Axle Vehicles	20	9	9	38	6	16	9	31	2	7	3	12	5	27	2	34	115
% Large 2 Axle Vehicles	7.7	3.4	3.4	4.8	2.3	1.4	2.5	1.7	1.5	2.8	5.4	2.7	1.2	2.2	1.2	1.8	2.4
3 Axle Vehicles	0	0	1	1	0	2	1	3	0	0	0	0	0	1	1	2	6
% 3 Axle Vehicles	0	0	0.4	0.1	0	0.2	0.3	0.2	0	0	0	0	0	0.1	0.6	0.1	0.1
4+ Axle Trucks	1	0	0	1	0	0	0	0	0	0	0	0	0	1	0	1	2
% 4+ Axle Trucks	0.4	0	0	0.1	0	0	0	0	0	0	0	0	0	0.1	0	0.1	0

	Anderson Street Southbound				Barton Road Westbound				Anderson Street Northbound				Barton Road Eastbound				
Start Time	Left	Thru	Right	App. Total	Left	Thru	Right	App. Total	Left	Thru	Right	App. Total	Left	Thru	Right	App. Total	Int. Total
Peak Hour Analysis From 07:00 AM to 08:45 AM - Peak 1 of 1																	
Peak Hour for Entire Intersection Begins at 07:30 AM																	
07:30 AM	32	23	34	89	34	176	44	254	8	38	9	55	49	194	27	270	668
07:45 AM	35	45	52	132	40	**214**	**62**	**316**	**24**	**51**	5	**80**	**81**	**209**	**38**	**328**	**856**
08:00 AM	**48**	**48**	**57**	**153**	**48**	174	57	279	22	26	**10**	58	69	141	25	235	725
08:15 AM	36	33	38	107	30	122	43	195	21	22	9	52	59	149	24	232	586
Total Volume	151	149	181	481	152	686	206	1044	75	137	33	245	258	693	114	1065	2835
% App. Total	31.4	31	37.6		14.6	65.7	19.7		30.6	55.9	13.5		24.2	65.1	10.7		
PHF	.786	.776	.794	.786	.792	.801	.831	.826	.781	.672	.825	.766	.796	.829	.750	.812	.828

Counts Unlimited Inc.
PO Box 1178
Corona, CA 92878
(951) 268-6268

City of Loma Linda
N/S: Anderson Street
E/W: Barton Road
Weather: Sunny

File Name : LMLANBAAM
Site Code : 00000043
Start Date : 4/10/2013
Page No : 2

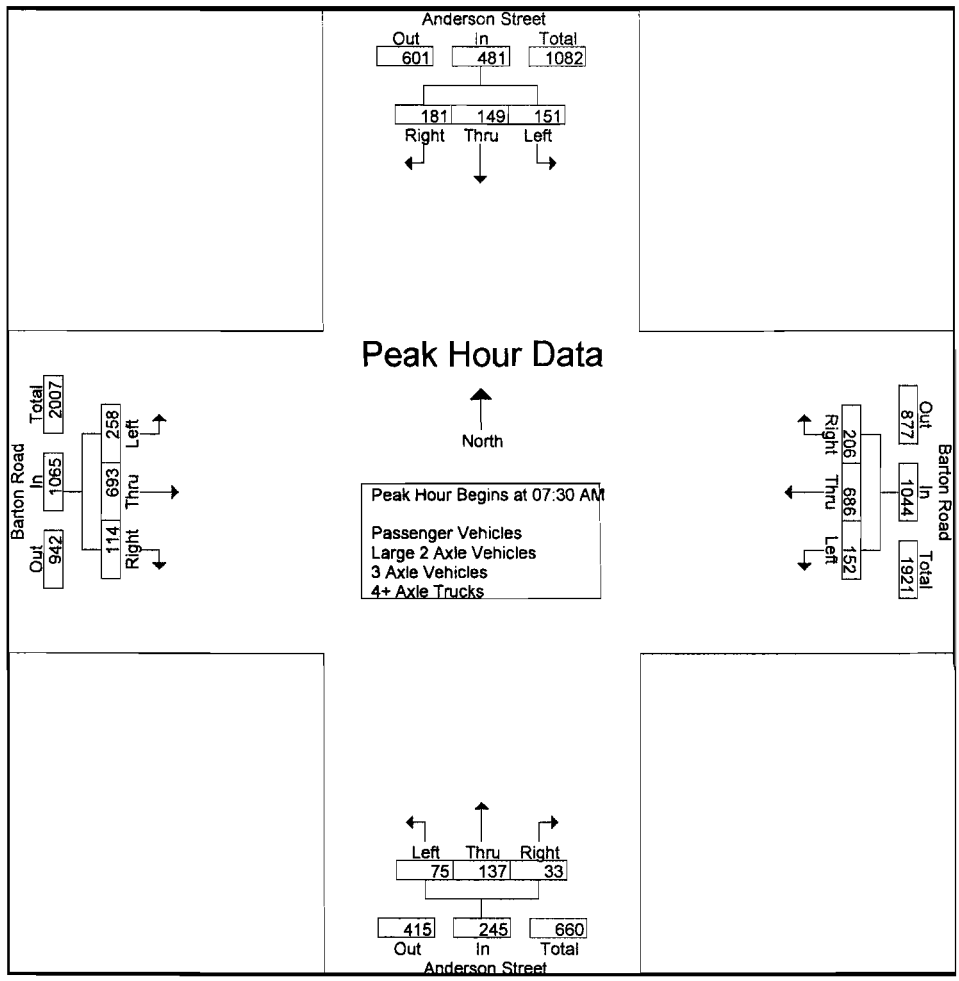

Peak Hour Analysis From 07:00 AM to 08:45 AM - Peak 1 of 1
Peak Hour for Each Approach Begins at:

	07:30 AM				07:30 AM				07:45 AM				07:30 AM			
+0 mins.	32	23	34	89	34	176	44	254	**24**	**51**	5	**80**	49	194	27	270
+15 mins.	35	45	52	132	40	**214**	**62**	**316**	22	26	**10**	58	**81**	**209**	**38**	**328**
+30 mins.	**48**	**48**	**57**	**153**	**48**	174	57	279	21	22	9	52	69	141	25	235
+45 mins.	36	33	38	107	30	122	43	195	15	38	7	60	59	149	24	232
Total Volume	151	149	181	481	152	686	206	1044	82	137	31	250	258	693	114	1065
% App. Total	31.4	31	37.6		14.6	65.7	19.7		32.8	54.8	12.4		24.2	65.1	10.7	
PHF	.786	.776	.794	.786	.792	.801	.831	.826	.854	.672	.775	.781	.796	.829	.750	.812

Counts Unlimited Inc.
PO Box 1178
Corona, CA 92878
(951) 268-6268

City of Loma Linda
N/S: Anderson Street
E/W: Barton Road
Weather: Sunny

File Name : LMLANBAAM
Site Code : 00000043
Start Date : 4/10/2013
Page No : 1

Groups Printed- Passenger Vehicles

	Anderson Street Southbound				Barton Road Westbound				Anderson Street Northbound				Barton Road Eastbound				
Start Time	Left	Thru	Right	App. Total	Left	Thru	Right	App. Total	Left	Thru	Right	App. Total	Left	Thru	Right	App. Total	Int. Total
07:00 AM	26	18	19	63	15	118	24	157	8	23	4	35	19	119	9	147	402
07:15 AM	21	17	27	65	19	136	34	189	16	27	1	44	35	157	17	209	507
07:30 AM	29	23	33	85	33	175	44	252	8	37	7	52	48	186	26	260	649
07:45 AM	31	44	51	126	39	213	61	313	24	50	5	79	81	207	38	326	844
Total	107	102	130	339	106	642	163	911	56	137	17	210	183	669	90	942	2402
08:00 AM	48	46	54	148	47	169	55	271	22	25	10	57	69	138	25	232	708
08:15 AM	33	33	36	102	30	119	41	190	21	22	9	52	59	146	23	228	572
08:30 AM	22	37	18	77	29	130	46	205	14	37	7	58	51	133	16	200	540
08:45 AM	30	35	18	83	45	107	46	198	15	24	10	49	46	140	15	201	531
Total	133	151	126	410	151	525	188	864	72	108	36	216	225	557	79	861	2351
Grand Total	240	253	256	749	257	1167	351	1775	128	245	53	426	408	1226	169	1803	4753
Apprch %	32	33.8	34.2		14.5	65.7	19.8		30	57.5	12.4		22.6	68	9.4		
Total %	5	5.3	5.4	15.8	5.4	24.6	7.4	37.3	2.7	5.2	1.1	9	8.6	25.8	3.6	37.9	

	Anderson Street Southbound				Barton Road Westbound				Anderson Street Northbound				Barton Road Eastbound				
Start Time	Left	Thru	Right	App. Total	Left	Thru	Right	App. Total	Left	Thru	Right	App. Total	Left	Thru	Right	App. Total	Int. Total
Peak Hour Analysis From 07:30 AM to 08:15 AM - Peak 1 of 1																	
Peak Hour for Entire Intersection Begins at 07:30 AM																	
07:30 AM	29	23	33	85	33	175	44	252	8	37	7	52	48	186	26	260	649
07:45 AM	31	44	51	126	39	213	61	313	24	50	5	79	81	207	38	326	844
08:00 AM	48	46	54	148	47	169	55	271	22	25	10	57	69	138	25	232	708
08:15 AM	33	33	36	102	30	119	41	190	21	22	9	52	59	146	23	228	572
Total Volume	141	146	174	461	149	676	201	1026	75	134	31	240	257	677	112	1046	2773
% App. Total	30.6	31.7	37.7		14.5	65.9	19.6		31.2	55.8	12.9		24.6	64.7	10.7		
PHF	.734	.793	.806	.779	.793	.793	.824	.819	.781	.670	.775	.759	.793	.818	.737	.802	.821

Counts Unlimited Inc.
PO Box 1178
Corona, CA 92878
(951) 268-6268

City of Loma Linda
N/S: Anderson Street
E/W: Barton Road
Weather: Sunny

File Name : LMLANBAAM
Site Code 00000043
Start Date : 4/10/2013
Page No : 2

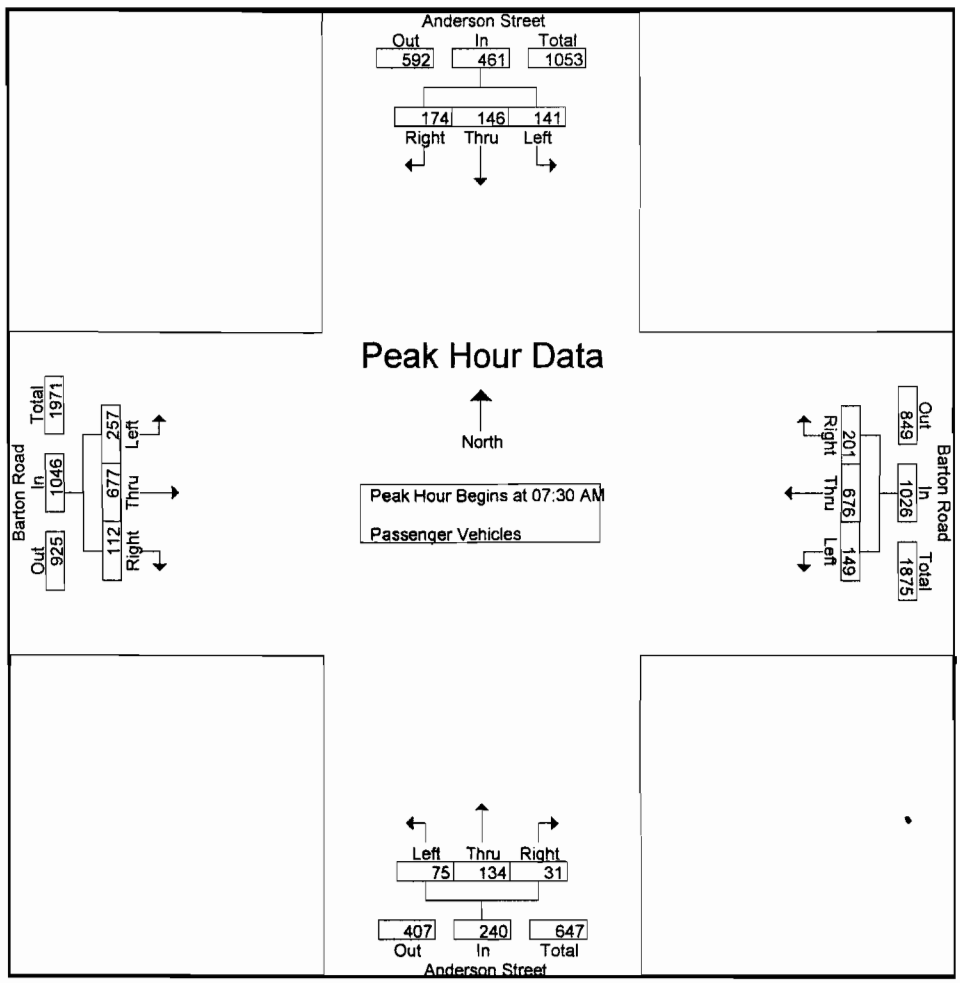

Peak Hour Analysis From 07:30 AM to 08:15 AM - Peak 1 of 1
Peak Hour for Each Approach Begins at:

	07:30 AM				07:30 AM				07:30 AM				07:30 AM			
+0 mins.	29	23	33	85	33	175	44	252	8	37	7	52	48	186	26	260
+15 mins.	31	44	51	126	39	**213**	**61**	**313**	**24**	**50**	5	**79**	**81**	**207**	**38**	**326**
+30 mins.	**48**	**46**	**54**	**148**	**47**	169	55	271	22	25	**10**	57	69	138	25	232
+45 mins.	33	33	36	102	30	119	41	190	21	22	9	52	59	146	23	228
Total Volume	141	146	174	461	149	676	201	1026	75	134	31	240	257	677	112	1046
% App. Total	30.6	31.7	37.7		14.5	65.9	19.6		31.2	55.8	12.9		24.6	64.7	10.7	
PHF	.734	.793	.806	.779	.793	.793	.824	.819	.781	.670	.775	.759	.793	.818	.737	.802

Counts Unlimited Inc.
PO Box 1178
Corona, CA 92878
(951) 268-6268

City of Loma Linda
N/S: Anderson Street
E/W: Barton Road
Weather: Sunny

File Name : LMLANBAAM
Site Code : 00000043
Start Date : 4/10/2013
Page No : 1

Groups Printed- Large 2 Axle Vehicles

	Anderson Street Southbound				Barton Road Westbound				Anderson Street Northbound				Barton Road Eastbound				
Start Time	Left	Thru	Right	App. Total	Left	Thru	Right	App. Total	Left	Thru	Right	App. Total	Left	Thru	Right	App. Total	Int. Total
07:00 AM	2	1	1	4	0	1	1	2	0	2	0	2	2	1	0	3	11
07:15 AM	2	2	1	5	1	2	1	4	1	0	1	2	0	1	0	1	12
07:30 AM	2	0	1	3	1	0	0	1	0	1	2	3	1	8	1	10	17
07:45 AM	4	1	1	6	1	1	1	3	0	1	0	1	0	2	0	2	12
Total	10	4	4	18	3	4	3	10	1	4	3	8	3	12	1	16	52
08:00 AM	0	2	2	4	1	5	2	8	0	1	0	1	0	3	0	3	16
08:15 AM	3	0	2	5	0	3	2	5	0	0	0	0	0	3	0	3	13
08:30 AM	4	1	0	5	1	2	1	4	1	1	0	2	1	5	1	7	18
08:45 AM	3	2	1	6	1	2	1	4	0	1	0	1	1	4	0	5	16
Total	10	5	5	20	3	12	6	21	1	3	0	4	2	15	1	18	63
Grand Total	20	9	9	38	6	16	9	31	2	7	3	12	5	27	2	34	115
Apprch %	52.6	23.7	23.7		19.4	51.6	29		16.7	58.3	25		14.7	79.4	5.9		
Total %	17.4	7.8	7.8	33	5.2	13.9	7.8	27	1.7	6.1	2.6	10.4	4.3	23.5	1.7	29.6	

	Anderson Street Southbound				Barton Road Westbound				Anderson Street Northbound				Barton Road Eastbound				
Start Time	Left	Thru	Right	App. Total	Left	Thru	Right	App. Total	Left	Thru	Right	App. Total	Left	Thru	Right	App. Total	Int. Total
Peak Hour Analysis From 07:30 AM to 08:15 AM - Peak 1 of 1																	
Peak Hour for Entire Intersection Begins at 07:30 AM																	
07:30 AM	2	0	1	3	1	0	0	1	0	1	2	3	1	8	1	10	17
07:45 AM	4	1	1	6	1	1	1	3	0	1	0	1	0	2	0	2	12
08:00 AM	0	2	2	4	1	5	2	8	0	1	0	1	0	3	0	3	16
08:15 AM	3	0	2	5	0	3	2	5	0	0	0	0	0	3	0	3	13
Total Volume	9	3	6	18	3	9	5	17	0	3	2	5	1	16	1	18	58
% App. Total	50	16.7	33.3		17.6	52.9	29.4		0	60	40		5.6	88.9	5.6		
PHF	.563	.375	.750	.750	.750	.450	.625	.531	.000	.750	.250	.417	.250	.500	.250	.450	.853

Counts Unlimited Inc.
PO Box 1178
Corona, CA 92878
(951) 268-6268

City of Loma Linda
N/S: Anderson Street
E/W: Barton Road
Weather: Sunny

File Name : LMLANBAAM
Site Code : 00000043
Start Date : 4/10/2013
Page No : 2

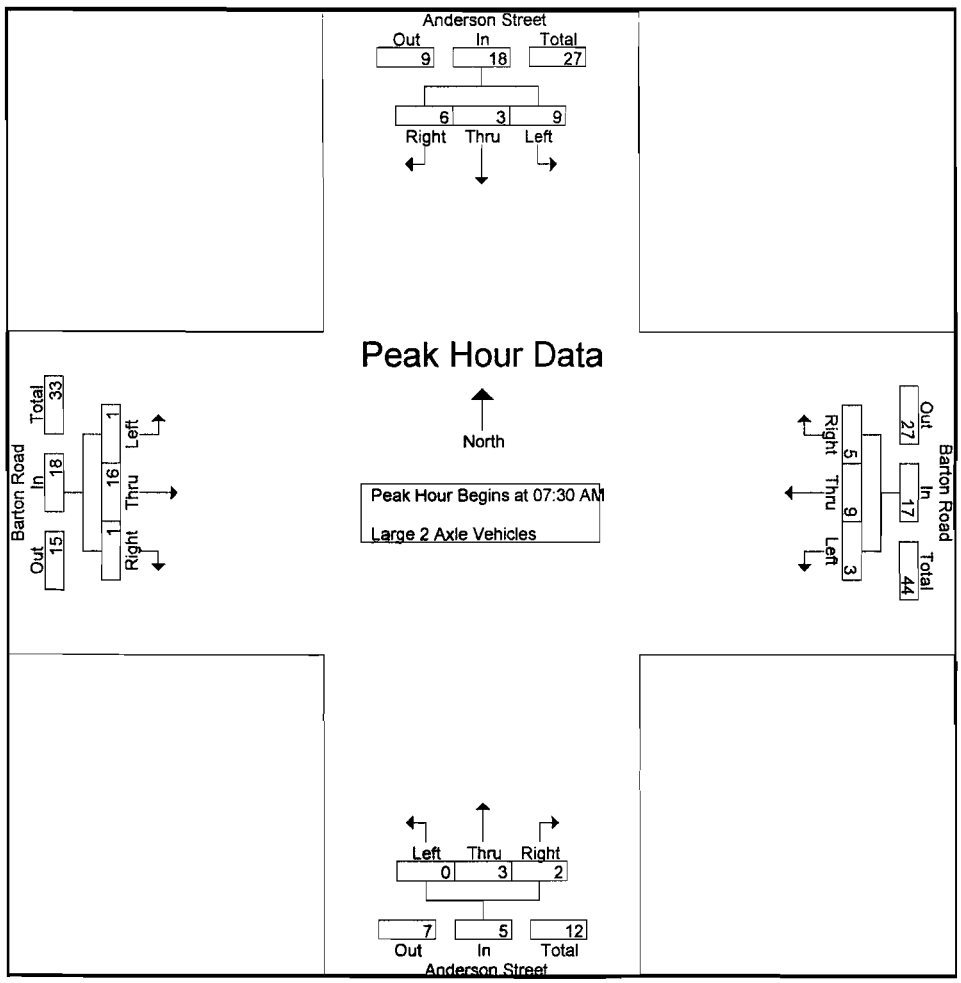

Peak Hour Analysis From 07:30 AM to 08:15 AM - Peak 1 of 1
Peak Hour for Each Approach Begins at:

	07:30 AM				07:30 AM				07:30 AM				07:30 AM			
+0 mins.	2	0	1	3	**1**	0	0	1	0	**1**	**2**	**3**	**1**	**8**	**1**	**10**
+15 mins.	**4**	1	1	**6**	1	1	1	3	0	1	0	1	0	2	0	2
+30 mins.	0	**2**	**2**	4	1	**5**	**2**	**8**	0	1	0	1	0	3	0	3
+45 mins.	3	0	2	5	0	3	2	5	0	0	0	0	0	3	0	3
Total Volume	9	3	6	18	3	9	5	17	0	3	2	5	1	16	1	18
% App. Total	50	16.7	33.3		17.6	52.9	29.4		0	60	40		5.6	88.9	5.6	
PHF	.563	.375	.750	.750	.750	.450	.625	.531	.000	.750	.250	.417	.250	.500	.250	.450

Counts Unlimited Inc.
PO Box 1178
Corona, CA 92878
(951) 268-6268

City of Loma Linda
N/S: Anderson Street
E/W: Barton Road
Weather: Sunny

File Name : LMLANBAAM
Site Code : 00000043
Start Date : 4/10/2013
Page No : 1

Groups Printed- 3 Axle Vehicles

	Anderson Street Southbound				Barton Road Westbound				Anderson Street Northbound				Barton Road Eastbound				
Start Time	Left	Thru	Right	App. Total	Left	Thru	Right	App. Total	Left	Thru	Right	App. Total	Left	Thru	Right	App. Total	Int. Total
07:00 AM	0	0	0	0	0	0	0	0	0	0	0	0	0	0	0	0	0
07:15 AM	0	0	0	0	0	0	0	0	0	0	0	0	0	1	0	1	1
07:30 AM	0	0	0	0	0	1	0	1	0	0	0	0	0	0	0	0	1
07:45 AM	0	0	0	0	0	0	0	0	0	0	0	0	0	0	0	0	0
Total	0	0	0	0	0	1	0	1	0	0	0	0	0	1	0	1	2
08:00 AM	0	0	1	1	0	0	0	0	0	0	0	0	0	0	0	0	1
08:15 AM	0	0	0	0	0	0	0	0	0	0	0	0	0	0	1	1	1
08:30 AM	0	0	0	0	0	0	0	0	0	0	0	0	0	0	0	0	0
08:45 AM	0	0	0	0	0	1	1	2	0	0	0	0	0	0	0	0	2
Total	0	0	1	1	0	1	1	2	0	0	0	0	0	0	1	1	4
Grand Total	0	0	1	1	0	2	1	3	0	0	0	0	0	1	1	2	6
Apprch %	0	0	100		0	66.7	33.3		0	0	0		0	50	50		
Total %	0	0	16.7	16.7	0	33.3	16.7	50	0	0	0	0	0	16.7	16.7	33.3	

	Anderson Street Southbound				Barton Road Westbound				Anderson Street Northbound				Barton Road Eastbound				
Start Time	Left	Thru	Right	App. Total	Left	Thru	Right	App. Total	Left	Thru	Right	App. Total	Left	Thru	Right	App. Total	Int. Total
Peak Hour Analysis From 07:30 AM to 08:15 AM - Peak 1 of 1																	
Peak Hour for Entire Intersection Begins at 07:30 AM																	
07:30 AM	0	0	0	0	0	1	0	1	0	0	0	0	0	0	0	0	1
07:45 AM	0	0	0	0	0	0	0	0	0	0	0	0	0	0	0	0	0
08:00 AM	0	0	1	1	0	0	0	0	0	0	0	0	0	0	0	0	1
08:15 AM	0	0	0	0	0	0	0	0	0	0	0	0	0	0	1	1	1
Total Volume	0	0	1	1	0	1	0	1	0	0	0	0	0	0	1	1	3
% App. Total	0	0	100		0	100	0		0	0	0		0	0	100		
PHF	.000	.000	.250	.250	.000	.250	.000	.250	.000	.000	.000	.000	.000	.000	.250	.250	.750

Counts Unlimited Inc.
PO Box 1178
Corona, CA 92878
(951) 268-6268

City of Loma Linda
N/S: Anderson Street
E/W: Barton Road
Weather: Sunny

File Name : LMLANBAAM
Site Code : 00000043
Start Date : 4/10/2013
Page No : 2

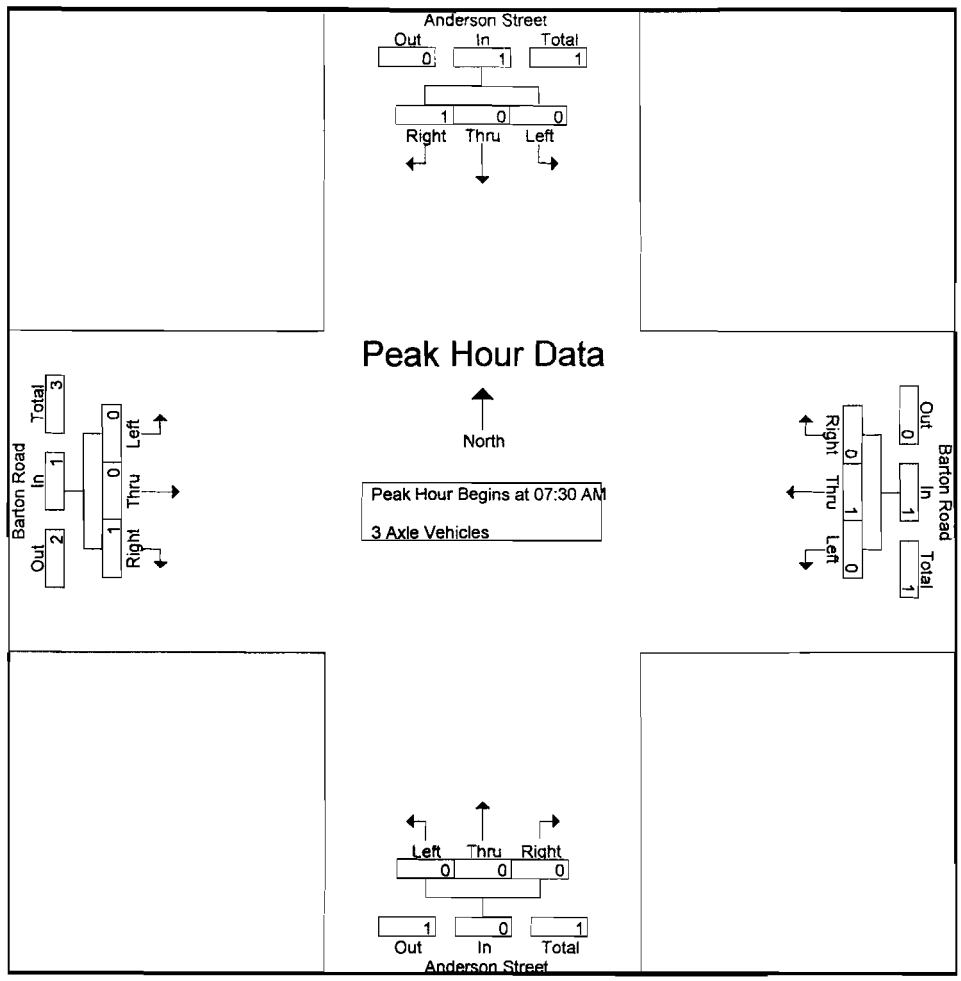

Peak Hour Analysis From 07:30 AM to 08:15 AM - Peak 1 of 1
Peak Hour for Each Approach Begins at:

	07:30 AM				07:30 AM				07:30 AM				07 30 AM			
+0 mins.	0	0	0	0	0	**1**	0	**1**	0	0	0	0	0	0	0	0
+15 mins.	0	0	0	0	0	0	0	0	0	0	0	0	0	0	0	0
+30 mins.	0	0	**1**	**1**	0	0	0	0	0	0	0	0	0	0	0	0
+45 mins.	0	0	0	0	0	0	0	0	0	0	0	0	0	0	**1**	**1**
Total Volume	0	0	1	1	0	1	0	1	0	0	0	0	0	0	1	1
% App. Total	0	0	100		0	100	0		0	0	0		0	0	100	
PHF	.000	.000	.250	.250	.000	.250	.000	.250	.000	.000	.000	.000	.000	.000	.250	.250

Counts Unlimited Inc.
PO Box 1178
Corona, CA 92878
(951) 268-6268

City of Loma Linda
N/S: Anderson Street
E/W: Barton Road
Weather: Sunny

File Name : LMLANBAAM
Site Code : 00000043
Start Date : 4/10/2013
Page No : 1

Groups Printed- 4+ Axle Trucks

	Anderson Street Southbound				Barton Road Westbound				Anderson Street Northbound				Barton Road Eastbound				
Start Time	Left	Thru	Right	App. Total	Left	Thru	Right	App. Total	Left	Thru	Right	App. Total	Left	Thru	Right	App. Total	Int. Total
07:00 AM	0	0	0	0	0	0	0	0	0	0	0	0	0	0	0	0	0
07:15 AM	0	0	0	0	0	0	0	0	0	0	0	0	0	0	0	0	0
07:30 AM	1	0	0	1	0	0	0	0	0	0	0	0	0	0	0	0	1
07:45 AM	0	0	0	0	0	0	0	0	0	0	0	0	0	0	0	0	0
Total	1	0	0	1	0	0	0	0	0	0	0	0	0	0	0	0	1
08:00 AM	0	0	0	0	0	0	0	0	0	0	0	0	0	0	0	0	0
08:15 AM	0	0	0	0	0	0	0	0	0	0	0	0	0	0	0	0	0
08:30 AM	0	0	0	0	0	0	0	0	0	0	0	0	0	0	0	0	0
08:45 AM	0	0	0	0	0	0	0	0	0	0	0	0	0	1	0	1	1
Total	0	0	0	0	0	0	0	0	0	0	0	0	0	1	0	1	1
Grand Total	1	0	0	1	0	0	0	0	0	0	0	0	0	1	0	1	2
Apprch %	100	0	0		0	0	0		0	0	0		0	100	0		
Total %	50	0	0	50	0	0	0	0	0	0	0	0	0	50	0	50	

	Anderson Street Southbound				Barton Road Westbound				Anderson Street Northbound				Barton Road Eastbound				
Start Time	Left	Thru	Right	App. Total	Left	Thru	Right	App. Total	Left	Thru	Right	App. Total	Left	Thru	Right	App. Total	Int. Total
Peak Hour Analysis From 07:30 AM to 08:15 AM - Peak 1 of 1																	
Peak Hour for Entire Intersection Begins at 07:30 AM																	
07:30 AM	1	0	0	1	0	0	0	0	0	0	0	0	0	0	0	0	1
07:45 AM	0	0	0	0	0	0	0	0	0	0	0	0	0	0	0	0	0
08:00 AM	0	0	0	0	0	0	0	0	0	0	0	0	0	0	0	0	0
08:15 AM	0	0	0	0	0	0	0	0	0	0	0	0	0	0	0	0	0
Total Volume	1	0	0	1	0	0	0	0	0	0	0	0	0	0	0	0	1
% App. Total	100	0	0		0	0	0		0	0	0		0	0	0		
PHF	.250	.000	.000	.250	.000	.000	.000	.000	.000	.000	.000	.000	.000	.000	.000	.000	.250

Counts Unlimited Inc.
PO Box 1178
Corona, CA 92878
(951) 268-6268

City of Loma Linda
N/S: Anderson Street
E/W: Barton Road
Weather: Sunny

File Name : LMLANBAAM
Site Code : 00000043
Start Date : 4/10/2013
Page No : 2

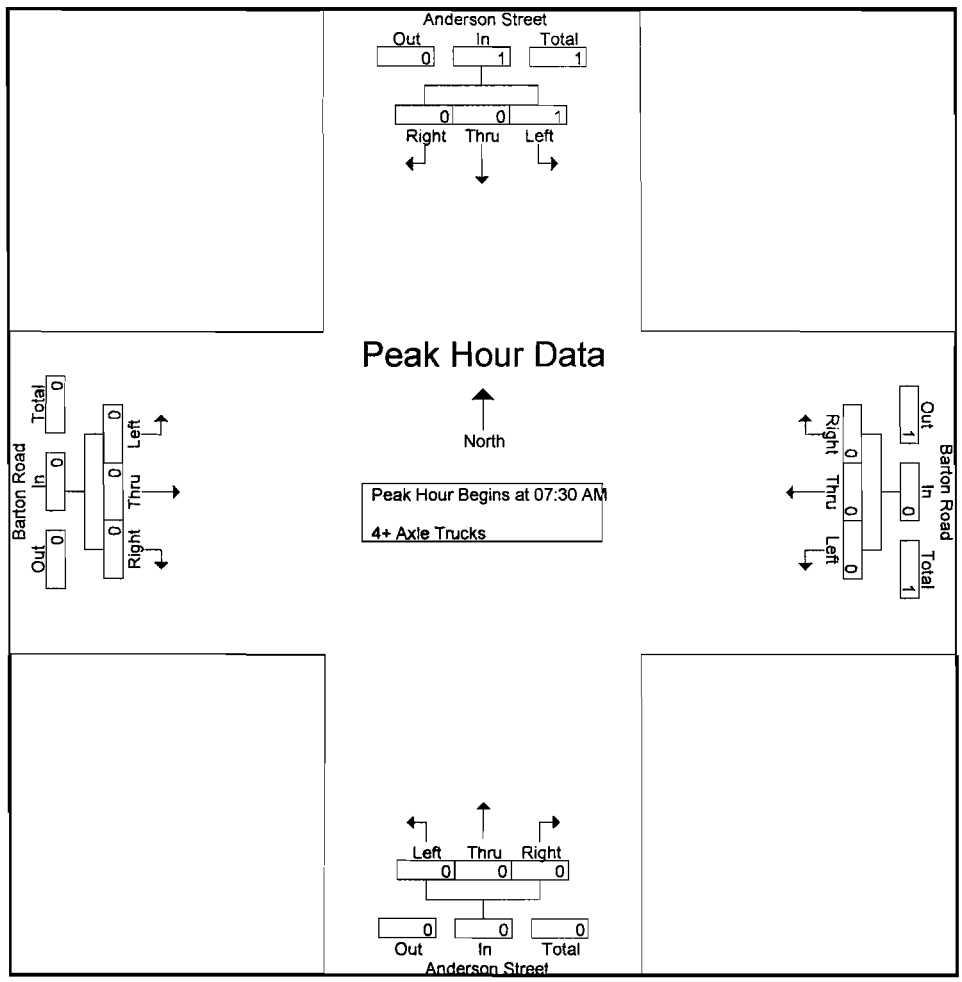

Peak Hour Analysis From 07:30 AM to 08:15 AM - Peak 1 of 1
Peak Hour for Each Approach Begins at:

	07:30 AM				07:30 AM				07:30 AM				07:30 AM			
+0 mins.	**1**	0	0	**1**	0	0	0	0	0	0	0	0	0	0	0	0
+15 mins.	0	0	0	0	0	0	0	0	0	0	0	0	0	0	0	0
+30 mins.	0	0	0	0	0	0	0	0	0	0	0	0	0	0	0	0
+45 mins.	0	0	0	0	0	0	0	0	0	0	0	0	0	0	0	0
Total Volume	1	0	0	1	0	0	0	0	0	0	0	0	0	0	0	0
% App. Total	100	0	0		0	0	0		0	0	0		0	0	0	
PHF	.250	.000	.000	.250	.000	.000	.000	.000	.000	.000	.000	.000	.000	.000	.000	.000

Counts Unlimited Inc.
PO Box 1178
Corona, CA 92878
(951) 268-6268

City of Loma Linda
N/S: Anderson Street
E/W: Barton Road
Weather: Sunny

File Name : LMLANBAPM
Site Code : 00000043
Start Date : 4/10/2013
Page No : 1

Groups Printed- Passenger Vehicles - Large 2 Axle Vehicles - 3 Axle Vehicles - 4+ Axle Trucks

	Anderson Street Southbound				Barton Road Westbound				Anderson Street Northbound				Barton Road Eastbound				
Start Time	Left	Thru	Right	App. Total	Left	Thru	Right	App. Total	Left	Thru	Right	App. Total	Left	Thru	Right	App. Total	Int. Total
04:00 PM	52	35	63	150	13	187	38	238	29	30	17	76	33	186	6	225	689
04:15 PM	54	25	51	130	14	160	41	215	21	34	16	71	34	169	7	210	626
04:30 PM	69	24	68	161	12	212	44	268	33	28	23	84	36	184	9	229	742
04:45 PM	59	38	65	162	9	154	46	209	33	34	19	86	44	214	9	267	724
Total	234	122	247	603	48	713	169	930	116	126	75	317	147	753	31	931	2781
05:00 PM	79	30	89	198	14	183	46	243	48	45	22	115	30	204	19	253	809
05:15 PM	88	31	75	194	12	169	42	223	29	20	14	63	39	256	8	303	783
05:30 PM	52	25	61	138	13	157	46	216	33	24	7	64	51	211	22	284	702
05:45 PM	54	27	51	132	10	142	49	201	24	28	5	57	39	170	11	220	610
Total	273	113	276	662	49	651	183	883	134	117	48	299	159	841	60	1060	2904
Grand Total	507	235	523	1265	97	1364	352	1813	250	243	123	616	306	1594	91	1991	5685
Apprch %	40.1	18.6	41.3		5.4	75.2	19.4		40.6	39.4	20		15.4	80.1	4.6		
Total %	8.9	4.1	9.2	22.3	1.7	24	6.2	31.9	4.4	4.3	2.2	10.8	5.4	28	1.6	35	
Passenger Vehicles	488	228	517	1233	92	1349	343	1784	247	236	123	606	305	1577	91	1973	5596
% Passenger Vehicles	96.3	97	98.9	97.5	94.8	98.9	97.4	98.4	98.8	97.1	100	98.4	99.7	98.9	100	99.1	98.4
Large 2 Axle Vehicles	19	7	6	32	5	14	8	27	3	7	0	10	1	17	0	18	87
% Large 2 Axle Vehicles	3.7	3	1.1	2.5	5.2	1	2.3	1.5	1.2	2.9	0	1.6	0.3	1.1	0	0.9	1.5
3 Axle Vehicles	0	0	0	0	0	1	1	2	0	0	0	0	0	0	0	0	2
% 3 Axle Vehicles	0	0	0	0	0	0.1	0.3	0.1	0	0	0	0	0	0	0	0	0
4+ Axle Trucks	0	0	0	0	0	0	0	0	0	0	0	0	0	0	0	0	0
% 4+ Axle Trucks	0	0	0	0	0	0	0	0	0	0	0	0	0	0	0	0	0

	Anderson Street Southbound				Barton Road Westbound				Anderson Street Northbound				Barton Road Eastbound				
Start Time	Left	Thru	Right	App. Total	Left	Thru	Right	App. Total	Left	Thru	Right	App. Total	Left	Thru	Right	App. Total	Int. Total
Peak Hour Analysis From 04:00 PM to 05:45 PM - Peak 1 of 1																	
Peak Hour for Entire Intersection Begins at 04:30 PM																	
04:30 PM	69	24	68	161	12	**212**	**44**	**268**	33	28	**23**	84	36	184	9	229	742
04:45 PM	59	**38**	65	162	9	154	**46**	209	33	34	19	86	**44**	214	9	267	724
05:00 PM	79	30	**89**	**198**	**14**	183	46	243	**48**	**45**	22	**115**	30	204	**19**	253	**809**
05:15 PM	**88**	31	75	194	12	169	42	223	29	20	14	63	39	**256**	8	**303**	783
Total Volume	295	123	297	715	47	718	178	943	143	127	78	348	149	858	45	1052	3058
% App. Total	41.3	17.2	41.5		5	76.1	18.9		41.1	36.5	22.4		14.2	81.6	4.3		
PHF	.838	.809	.834	.903	.839	.847	.967	.880	.745	.706	.848	.757	.847	.838	.592	.868	.945

Counts Unlimited Inc.
PO Box 1178
Corona, CA 92878
(951) 268-6268

City of Loma Linda
N/S: Anderson Street
E/W: Barton Road
Weather: Sunny

File Name : LMLANBAPM
Site Code : 00000043
Start Date : 4/10/2013
Page No : 2

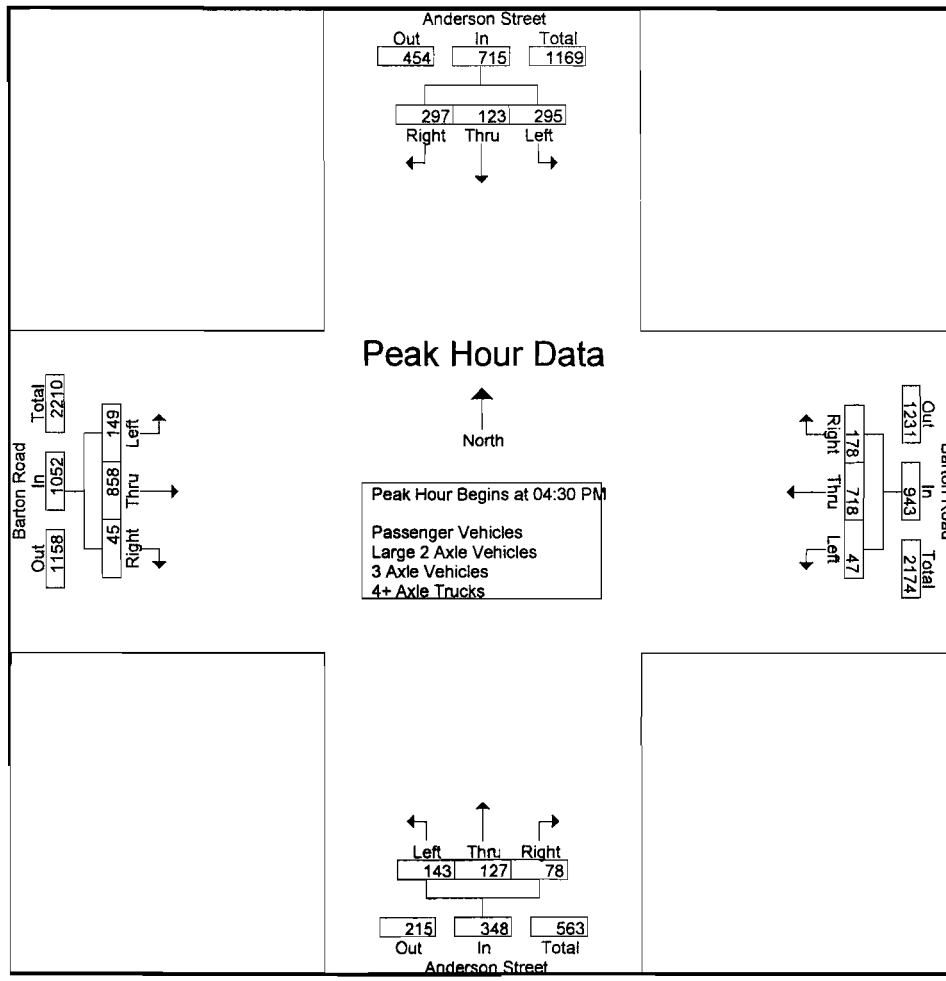

Peak Hour Analysis From 04:00 PM to 05:45 PM - Peak 1 of 1
Peak Hour for Each Approach Begins at:

	04:30 PM				04:30 PM				04:15 PM				04:45 PM			
+0 mins.	69	24	68	161	12	**212**	**44**	**268**	21	34	16	71	44	214	9	267
+15 mins.	59	**38**	65	162	9	154	**46**	209	33	28	**23**	84	30	204	19	253
+30 mins.	79	30	**89**	**198**	**14**	183	46	243	33	34	19	86	39	**256**	8	**303**
+45 mins.	**88**	31	75	194	12	169	42	223	**48**	**45**	22	**115**	**51**	211	**22**	284
Total Volume	295	123	297	715	47	718	178	943	135	141	80	356	164	885	58	1107
% App. Total	41.3	17.2	41.5		5	76.1	18.9		37.9	39.6	22.5		14.8	79.9	5.2	
PHF	.838	.809	.834	.903	.839	.847	.967	.880	.703	.783	.870	.774	.804	.864	.659	.913

Counts Unlimited Inc.
PO Box 1178
Corona, CA 92878
(951) 268-6268

City of Loma Linda
N/S: Anderson Street
E/W: Barton Road
Weather: Sunny

File Name : LMLANBAPM
Site Code : 00000043
Start Date : 4/10/2013
Page No : 1

Groups Printed- Passenger Vehicles

	Anderson Street Southbound				Barton Road Westbound				Anderson Street Northbound				Barton Road Eastbound				
Start Time	Left	Thru	Right	App. Total	Left	Thru	Right	App. Total	Left	Thru	Right	App. Total	Left	Thru	Right	App. Total	Int. Total
04:00 PM	48	34	63	145	13	185	38	236	29	29	17	75	33	185	6	224	680
04:15 PM	51	24	50	125	13	159	38	210	21	34	16	71	33	167	7	207	613
04:30 PM	68	23	68	159	11	210	43	264	33	27	23	83	36	183	9	228	734
04:45 PM	57	37	64	158	9	151	46	206	32	33	19	84	44	210	9	263	711
Total	224	118	245	587	46	705	165	916	115	123	75	313	146	745	31	922	2738
05:00 PM	76	29	86	191	13	182	45	240	48	44	22	114	30	202	19	251	796
05:15 PM	87	31	75	193	11	167	41	219	28	20	14	62	39	252	8	299	773
05:30 PM	49	24	60	133	13	156	45	214	33	23	7	63	51	209	22	282	692
05:45 PM	52	26	51	129	9	139	47	195	23	26	5	54	39	169	11	219	597
Total	264	110	272	646	46	644	178	868	132	113	48	293	159	832	60	1051	2858
Grand Total	488	228	517	1233	92	1349	343	1784	247	236	123	606	305	1577	91	1973	5596
Apprch %	39.6	18.5	41.9		5.2	75.6	19.2		40.8	38.9	20.3		15.5	79.9	4.6		
Total %	8.7	4.1	9.2	22	1.6	24.1	6.1	31.9	4.4	4.2	2.2	10.8	5.5	28.2	1.6	35.3	

	Anderson Street Southbound				Barton Road Westbound				Anderson Street Northbound				Barton Road Eastbound				
Start Time	Left	Thru	Right	App. Total	Left	Thru	Right	App. Total	Left	Thru	Right	App. Total	Left	Thru	Right	App. Total	Int. Total
Peak Hour Analysis From 04:30 PM to 05:15 PM - Peak 1 of 1																	
Peak Hour for Entire Intersection Begins at 04:30 PM																	
04:30 PM	68	23	68	159	11	**210**	43	**264**	33	27	**23**	83	36	183	9	228	734
04:45 PM	57	**37**	64	158	9	151	**46**	206	32	33	19	84	**44**	210	9	263	711
05:00 PM	76	29	**86**	191	**13**	182	45	240	**48**	**44**	22	**114**	30	202	**19**	251	**796**
05:15 PM	**87**	31	75	**193**	11	167	41	219	28	20	14	62	39	**252**	8	**299**	773
Total Volume	288	120	293	701	44	710	175	929	141	124	78	343	149	847	45	1041	3014
% App. Total	41.1	17.1	41.8		4.7	76.4	18.8		41.1	36.2	22.7		14.3	81.4	4.3		
PHF	.828	.811	.852	.908	.846	.845	.951	.880	.734	.705	.848	.752	.847	.840	.592	.870	.947

Counts Unlimited Inc.
PO Box 1178
Corona, CA 92878
(951) 268-6268

City of Loma Linda
N/S: Anderson Street
E/W: Barton Road
Weather: Sunny

File Name : LMLANBAPM
Site Code : 00000043
Start Date : 4/10/2013
Page No : 2

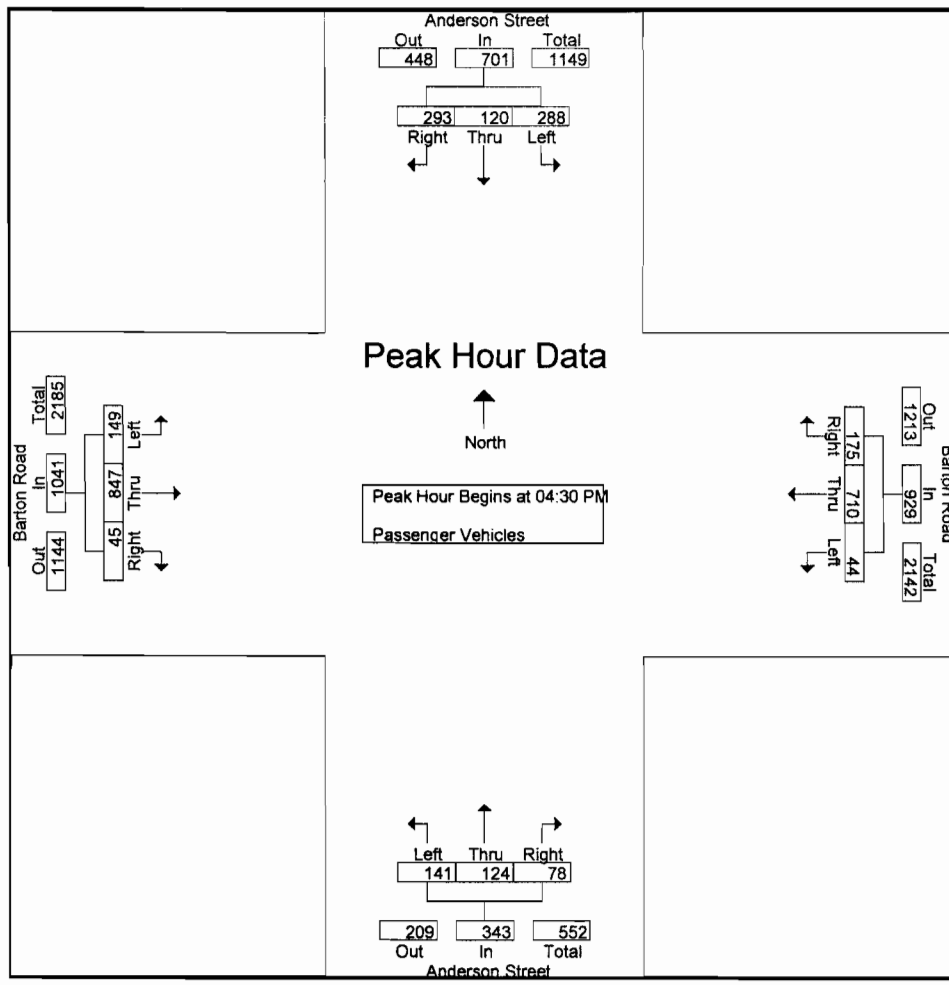

Peak Hour Analysis From 04:30 PM to 05:15 PM - Peak 1 of 1
Peak Hour for Each Approach Begins at:

	04:30 PM				04:30 PM				04:30 PM				04:30 PM			
+0 mins.	68	23	68	159	11	**210**	43	**264**	33	27	**23**	83	36	183	9	228
+15 mins.	57	**37**	64	158	9	151	**46**	206	32	33	19	84	**44**	210	9	263
+30 mins.	76	29	**86**	191	**13**	182	45	240	**48**	**44**	22	**114**	30	202	**19**	251
+45 mins.	**87**	31	75	**193**	11	167	41	219	28	20	14	62	39	**252**	8	**299**
Total Volume	288	120	293	701	44	710	175	929	141	124	78	343	149	847	45	1041
% App. Total	41.1	17.1	41.8		4.7	76.4	18.8		41.1	36.2	22.7		14.3	81.4	4.3	
PHF	.828	.811	.852	.908	.846	.845	.951	.880	.734	.705	.848	.752	.847	.840	.592	.870

Counts Unlimited Inc.
PO Box 1178
Corona, CA 92878
(951) 268-6268

City of Loma Linda
N/S: Anderson Street
E/W: Barton Road
Weather: Sunny

File Name : LMLANBAPM
Site Code : 00000043
Start Date : 4/10/2013
Page No : 1

Groups Printed- Large 2 Axle Vehicles

	Anderson Street Southbound				Barton Road Westbound				Anderson Street Northbound				Barton Road Eastbound				
Start Time	Left	Thru	Right	App. Total	Left	Thru	Right	App. Total	Left	Thru	Right	App. Total	Left	Thru	Right	App. Total	Int. Total
04:00 PM	4	1	0	5	0	2	0	2	0	1	0	1	0	1	0	1	9
04:15 PM	3	1	1	5	1	1	2	4	0	0	0	0	1	2	0	3	12
04:30 PM	1	1	0	2	1	2	1	4	0	1	0	1	0	1	0	1	8
04:45 PM	2	1	1	4	0	3	0	3	1	1	0	2	0	4	0	4	13
Total	10	4	2	16	2	8	3	13	1	3	0	4	1	8	0	9	42
05:00 PM	3	1	3	7	1	1	1	3	0	1	0	1	0	2	0	2	13
05:15 PM	1	0	0	1	1	2	1	4	1	0	0	1	0	4	0	4	10
05:30 PM	3	1	1	5	0	1	1	2	0	1	0	1	0	2	0	2	10
05:45 PM	2	1	0	3	1	2	2	5	1	2	0	3	0	1	0	1	12
Total	9	3	4	16	3	6	5	14	2	4	0	6	0	9	0	9	45
Grand Total	19	7	6	32	5	14	8	27	3	7	0	10	1	17	0	18	87
Apprch %	59.4	21.9	18.8		18.5	51.9	29.6		30	70	0		5.6	94.4	0		
Total %	21.8	8	6.9	36.8	5.7	16.1	9.2	31	3.4	8	0	11.5	1.1	19.5	0	20.7	

	Anderson Street Southbound				Barton Road Westbound				Anderson Street Northbound				Barton Road Eastbound				
Start Time	Left	Thru	Right	App. Total	Left	Thru	Right	App. Total	Left	Thru	Right	App. Total	Left	Thru	Right	App. Total	Int. Total
Peak Hour Analysis From 04:30 PM to 05:15 PM - Peak 1 of 1																	
Peak Hour for Entire Intersection Begins at 04:30 PM																	
04:30 PM	1	1	0	2	1	2	1	4	0	1	0	1	0	1	0	1	8
04:45 PM	2	1	1	4	0	3	0	3	1	1	0	2	0	4	0	4	13
05:00 PM	3	1	3	7	1	1	1	3	0	1	0	1	0	2	0	2	13
05:15 PM	1	0	0	1	1	2	1	4	1	0	0	1	0	4	0	4	10
Total Volume	7	3	4	14	3	8	3	14	2	3	0	5	0	11	0	11	44
% App. Total	50	21.4	28.6		21.4	57.1	21.4		40	60	0		0	100	0		
PHF	.583	.750	.333	.500	.750	.667	.750	.875	.500	.750	.000	.625	.000	.688	.000	.688	.846

Counts Unlimited Inc.
PO Box 1178
Corona, CA 92878
(951) 268-6268

City of Loma Linda
N/S: Anderson Street
E/W: Barton Road
Weather: Sunny

File Name : LMLANBAPM
Site Code : 00000043
Start Date : 4/10/2013
Page No : 2

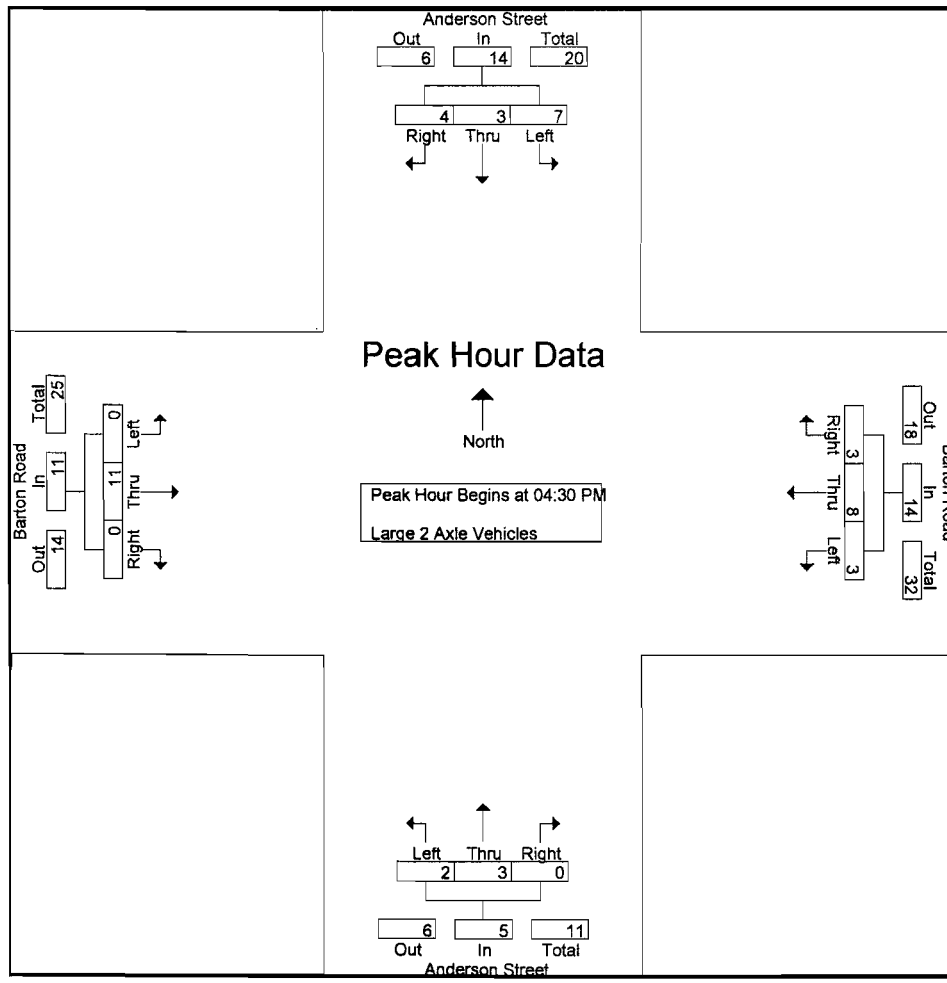

Peak Hour Analysis From 04:30 PM to 05:15 PM - Peak 1 of 1
Peak Hour for Each Approach Begins at:

	04:30 PM				04:30 PM				04:30 PM				04:30 PM			
+0 mins.	1	**1**	0	2	**1**	2	**1**	**4**	0	**1**	0	1	0	1	0	1
+15 mins.	2	1	1	4	0	**3**	0	3	**1**	1	0	**2**	0	**4**	0	**4**
+30 mins.	**3**	1	**3**	**7**	1	1	1	3	0	1	0	1	0	2	0	2
+45 mins.	1	0	0	1	1	2	1	4	1	0	0	1	0	4	0	4
Total Volume	7	3	4	14	3	8	3	14	2	3	0	5	0	11	0	11
% App. Total	50	21.4	28.6		21.4	57.1	21.4		40	60	0		0	100	0	
PHF	.583	.750	.333	.500	.750	.667	.750	.875	.500	.750	.000	.625	.000	.688	.000	.688

Counts Unlimited Inc.
PO Box 1178
Corona, CA 92878
(951) 268-6268

City of Loma Linda
N/S: Anderson Street
E/W: Barton Road
Weather: Sunny

File Name : LMLANBAPM
Site Code : 00000043
Start Date : 4/10/2013
Page No : 1

Groups Printed- 3 Axle Vehicles

	Anderson Street Southbound				Barton Road Westbound				Anderson Street Northbound				Barton Road Eastbound				
Start Time	Left	Thru	Right	App. Total	Left	Thru	Right	App. Total	Left	Thru	Right	App. Total	Left	Thru	Right	App. Total	Int. Total
04:00 PM	0	0	0	0	0	0	0	0	0	0	0	0	0	0	0	0	0
04:15 PM	0	0	0	0	0	0	1	1	0	0	0	0	0	0	0	0	1
04:30 PM	0	0	0	0	0	0	0	0	0	0	0	0	0	0	0	0	0
04:45 PM	0	0	0	0	0	0	0	0	0	0	0	0	0	0	0	0	0
Total	0	0	0	0	0	0	1	1	0	0	0	0	0	0	0	0	1
05:00 PM	0	0	0	0	0	0	0	0	0	0	0	0	0	0	0	0	0
05:15 PM	0	0	0	0	0	0	0	0	0	0	0	0	0	0	0	0	0
05:30 PM	0	0	0	0	0	0	0	0	0	0	0	0	0	0	0	0	0
05:45 PM	0	0	0	0	0	1	0	1	0	0	0	0	0	0	0	0	1
Total	0	0	0	0	0	1	0	1	0	0	0	0	0	0	0	0	1
Grand Total	0	0	0	0	0	1	1	2	0	0	0	0	0	0	0	0	2
Apprch %	0	0	0		0	50	50		0	0	0		0	0	0		
Total %	0	0	0	0	0	50	50	100	0	0	0	0	0	0	0	0	

	Anderson Street Southbound				Barton Road Westbound				Anderson Street Northbound				Barton Road Eastbound				
Start Time	Left	Thru	Right	App. Total	Left	Thru	Right	App. Total	Left	Thru	Right	App. Total	Left	Thru	Right	App. Total	Int. Total
Peak Hour Analysis From 04:30 PM to 05:15 PM - Peak 1 of 1																	
Peak Hour for Entire Intersection Begins at 04:30 PM																	
04:30 PM	0	0	0	0	0	0	0	0	0	0	0	0	0	0	0	0	0
04:45 PM	0	0	0	0	0	0	0	0	0	0	0	0	0	0	0	0	0
05:00 PM	0	0	0	0	0	0	0	0	0	0	0	0	0	0	0	0	0
05:15 PM	0	0	0	0	0	0	0	0	0	0	0	0	0	0	0	0	0
Total Volume	0	0	0	0	0	0	0	0	0	0	0	0	0	0	0	0	0
% App. Total	0	0	0		0	0	0		0	0	0		0	0	0		
PHF	.000	.000	.000	.000	.000	.000	.000	.000	.000	.000	.000	.000	.000	.000	.000	.000	.000

Counts Unlimited Inc.
PO Box 1178
Corona, CA 92878
(951) 268-6268

City of Loma Linda
N/S: Anderson Street
E/W: Barton Road
Weather: Sunny

File Name : LMLANBAPM
Site Code : 00000043
Start Date : 4/10/2013
Page No : 2

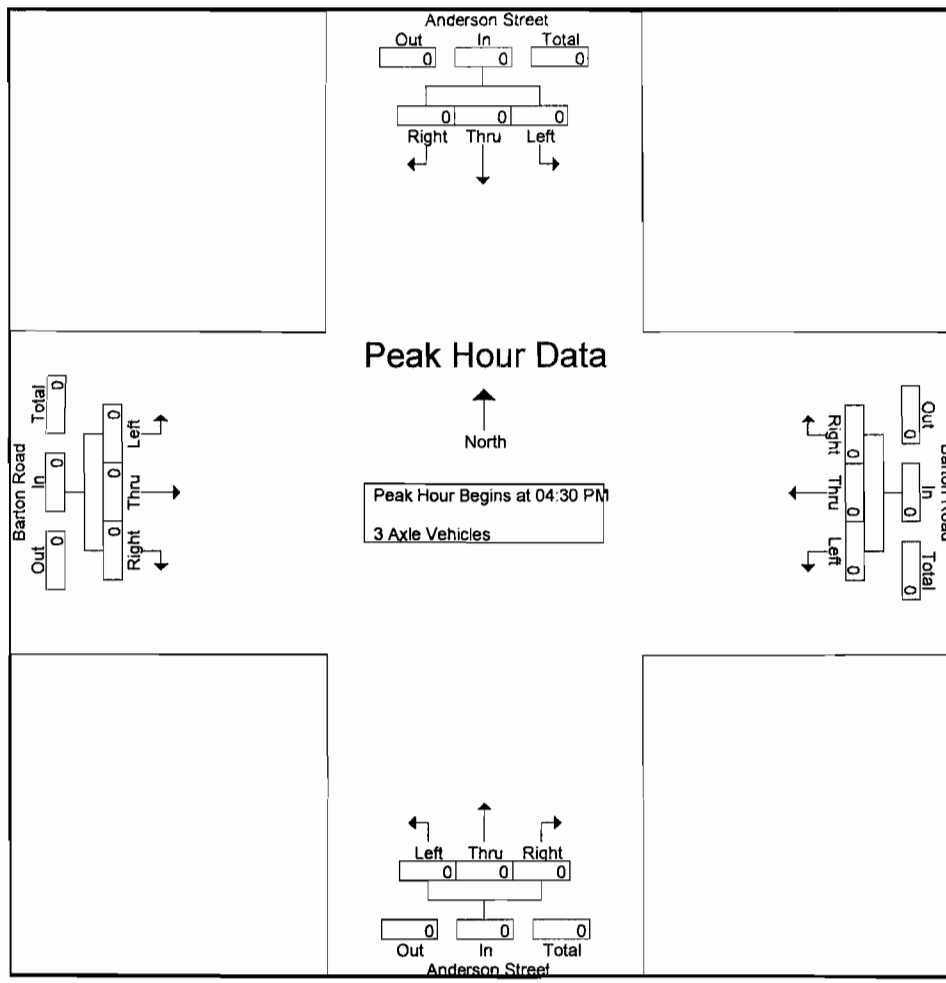

Peak Hour Analysis From 04:30 PM to 05:15 PM - Peak 1 of 1
Peak Hour for Each Approach Begins at:

	04:30 PM				04:30 PM				04:30 PM				04:30 PM			
+0 mins.	0	0	0	0	0	0	0	0	0	0	0	0	0	0	0	0
+15 mins.	0	0	0	0	0	0	0	0	0	0	0	0	0	0	0	0
+30 mins.	0	0	0	0	0	0	0	0	0	0	0	0	0	0	0	0
+45 mins.	0	0	0	0	0	0	0	0	0	0	0	0	0	0	0	0
Total Volume	0	0	0	0	0	0	0	0	0	0	0	0	0	0	0	0
% App. Total	0	0	0		0	0	0		0	0	0		0	0	0	
PHF	.000	.000	.000	.000	.000	.000	.000	.000	.000	.000	.000	.000	.000	.000	.000	.000

Counts Unlimited Inc.
PO Box 1178
Corona, CA 92878
(951) 268-6268

City of Loma Linda
N/S: Anderson Street
E/W: Barton Road
Weather: Sunny

File Name : LMLANBAPM
Site Code : 00000043
Start Date : 4/10/2013
Page No : 1

Groups Printed- 4+ Axle Trucks

	Anderson Street Southbound				Barton Road Westbound				Anderson Street Northbound				Barton Road Eastbound				
Start Time	Left	Thru	Right	App. Total	Left	Thru	Right	App. Total	Left	Thru	Right	App. Total	Left	Thru	Right	App. Total	Int. Total
04:00 PM	0	0	0	0	0	0	0	0	0	0	0	0	0	0	0	0	0
04:15 PM	0	0	0	0	0	0	0	0	0	0	0	0	0	0	0	0	0
04:30 PM	0	0	0	0	0	0	0	0	0	0	0	0	0	0	0	0	0
04:45 PM	0	0	0	0	0	0	0	0	0	0	0	0	0	0	0	0	0
Total	0	0	0	0	0	0	0	0	0	0	0	0	0	0	0	0	0
05:00 PM	0	0	0	0	0	0	0	0	0	0	0	0	0	0	0	0	0
05:15 PM	0	0	0	0	0	0	0	0	0	0	0	0	0	0	0	0	0
05:30 PM	0	0	0	0	0	0	0	0	0	0	0	0	0	0	0	0	0
05:45 PM	0	0	0	0	0	0	0	0	0	0	0	0	0	0	0	0	0
Total	0	0	0	0	0	0	0	0	0	0	0	0	0	0	0	0	0
Grand Total	0	0	0	0	0	0	0	0	0	0	0	0	0	0	0	0	0
Apprch %	0	0	0		0	0	0		0	0	0		0	0	0		
Total %																	

	Anderson Street Southbound				Barton Road Westbound				Anderson Street Northbound				Barton Road Eastbound				
Start Time	Left	Thru	Right	App. Total	Left	Thru	Right	App. Total	Left	Thru	Right	App. Total	Left	Thru	Right	App. Total	Int. Total
Peak Hour Analysis From 04:30 PM to 05:15 PM - Peak 1 of 1																	
Peak Hour for Entire Intersection Begins at 04:30 PM																	
04:30 PM	0	0	0	0	0	0	0	0	0	0	0	0	0	0	0	0	0
04:45 PM	0	0	0	0	0	0	0	0	0	0	0	0	0	0	0	0	0
05:00 PM	0	0	0	0	0	0	0	0	0	0	0	0	0	0	0	0	0
05:15 PM	0	0	0	0	0	0	0	0	0	0	0	0	0	0	0	0	0
Total Volume	0	0	0	0	0	0	0	0	0	0	0	0	0	0	0	0	0
% App. Total	0	0	0		0	0	0		0	0	0		0	0	0		
PHF	.000	.000	.000	.000	.000	.000	.000	.000	.000	.000	.000	.000	.000	.000	.000	.000	.000

Counts Unlimited Inc.
PO Box 1178
Corona, CA 92878
(951) 268-6268

City of Loma Linda
N/S: Anderson Street
E/W: Barton Road
Weather: Sunny

File Name : LMLANBAPM
Site Code : 00000043
Start Date : 4/10/2013
Page No : 2

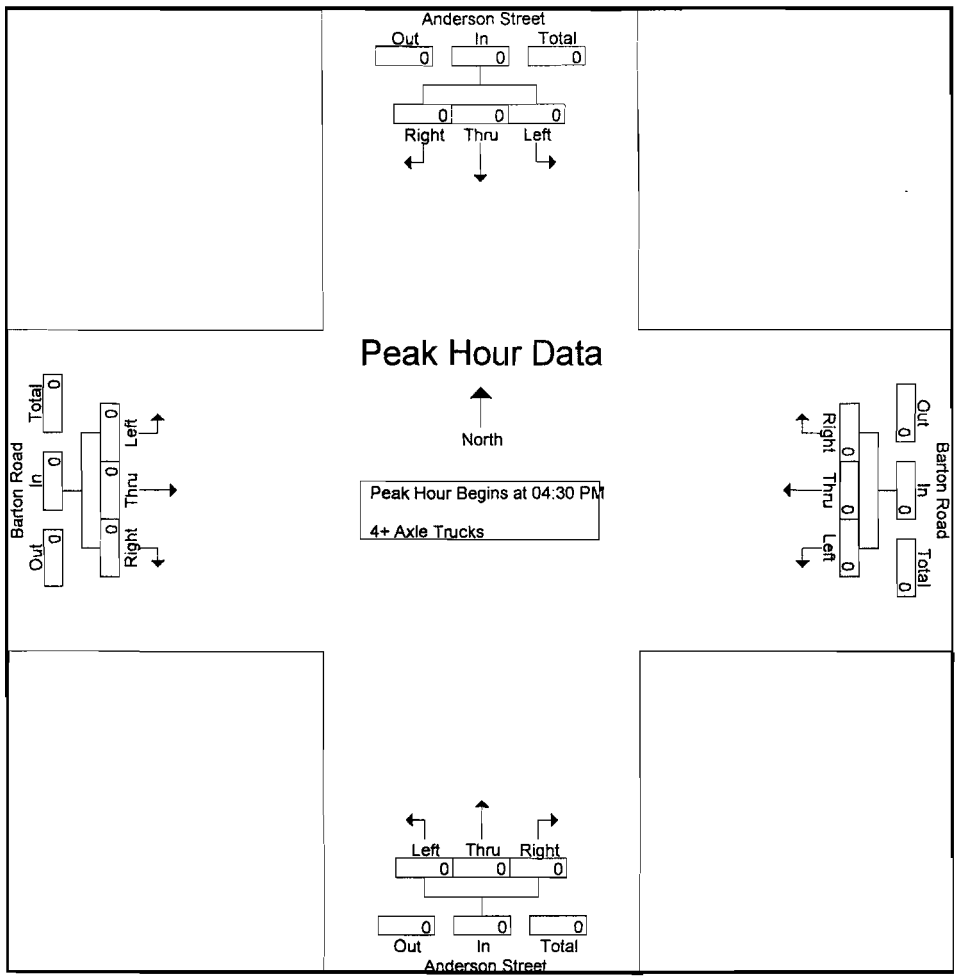

Peak Hour Analysis From 04:30 PM to 05:15 PM - Peak 1 of 1
Peak Hour for Each Approach Begins at:

	04:30 PM				04:30 PM				04:30 PM				04:30 PM			
+0 mins.	0	0	0	0	0	0	0	0	0	0	0	0	0	0	0	0
+15 mins.	0	0	0	0	0	0	0	0	0	0	0	0	0	0	0	0
+30 mins.	0	0	0	0	0	0	0	0	0	0	0	0	0	0	0	0
+45 mins.	0	0	0	0	0	0	0	0	0	0	0	0	0	0	0	0
Total Volume	0	0	0	0	0	0	0	0	0	0	0	0	0	0	0	0
% App Total	0	0	0		0	0	0		0	0	0		0	0	0	
PHF	.000	.000	.000	.000	.000	.000	.000	.000	.000	.000	.000	.000	.000	.000	.000	.000

APPENDIX C

Future Growth Increment Calculation Worksheets

Opening Year (2013)

CAMPUS STREET (NS) / STEWART STREET (EW)

MORNING PEAK HOUR

EXISTING PEAK HOUR TURNING MOVEMENT VOLUMES (AUTOS):

2011

```
                    1    31     9
                 <     v     >
          31 ^                   ^   279
          51 >                   <    35
          18 v                   v   315
                 <     ^     >
                   11   257   219
```

EXISTING PEAK HOUR COUNT YEAR (AUTOS):

2011

```
                         41   567
                          v     ^
          47 <     IN =      1257 <   629
         100 >    OUT =      1257 >   279
                          v     ^
                        364   487
```

EXISTING PEAK HOUR TURNING MOVEMENT VOLUMES (TRUCKS IN PCE'S):

```
                    0     5     0
                 <     v     >
           0 ^                   ^     2
           3 >                   <     3
           2 v                   v     7
                 <     ^     >
                    0     6     6
```

PCE FACTORS BY AXLE:

2: 1.5 3: 2.0 4+: 3.0

TOTAL EXISTING PEAK HOUR TURNING MOVEMENT VOLUMES (PCES):

2011

```
                    1    36     9
                 <     v     >
          31 ^                   ^   281
          54 >                   <    38
          20 v                   v   322
                 <     ^     >
                   11   263   225
```

EXISTING PEAK PERIOD MODEL YEAR (AUTO):

2000

```
                         0     0
                          v     ^
           0 <     IN =      876 <   506
           0 >    OUT =      876 >   370
                          v     ^
                        506   370
```

EXISTING PEAK PERIOD MODEL YEAR (TRUCKS IN PCE'S):

1994

```
                         0     0
                          v     ^
           0 <     IN =        6 <     2
           0 >    OUT =        6 >     4
                          v     ^
                          2     4
```

EXISTING PEAK HOUR MODEL YEAR (PCE'S):

PHF FOR CARS: 0.38

PHF FOR TRUCKS: 0.333

```
                         0     0
                          v     ^
           0 <     IN =      335 <   193
           0 >    OUT =      335 >   142
                          v     ^
                        193   142
```

FUTURE PEAK PERIOD MODEL YEAR (AUTO):

2030

```
                         0     7
                          v     ^
          90 <     IN =     1123 <    95
        1017 >    OUT =     1123 >  1021
                          v     ^
                          5    11
```

FUTURE PEAK PERIOD MODEL YEAR (TRUCKS IN PCE'S):

2020

```
                         0     0
                          v     ^
          14 <     IN =       32 <    14
          18 >    OUT =       34 >    18
                          v     ^
                          2     0
```

FUTURE PEAK HOUR MODEL YEAR (PCE'S):

PHF FOR CARS: 0.38

PHF FOR TRUCKS: 0.333

```
                         0     3
                          v     ^
          39 <     IN =      437 <    41
         392 >    OUT =      438 >   394
                          v     ^
                          3     4
```

RAW GROWTH (PCE'S): 2000 TO 2030

CONVERSION OF TRUCKS TO: 2025

FACTOR = 1.25

```
                         0     3
                          v     ^
          40 <                <   -151
         394 >                >    253
                          v     ^
                       -190  -138
```

ADJUSTED GROWTH (PCE'S): 2000 TO 2030

10 MINIMUM GROWTH %

```
                         0    60
                          v     ^
          40 <     IN =      450 <    60
         390 >    OUT =      350 >   250
                          v     ^
                          0     0
```

OPENING YEAR GROWTH: 2011 TO 2013

2 YEARS

```
                         0     0
                          v     ^
           0 <                <     0
          30 >                >    20
                          v     ^
                          0     0
```

INITIAL OPENING YEAR VOLUMES:

2013

```
                        50   580
                          v     ^
          50 <     IN =     1330 <   640
         140 >    OUT =     1320 >   310
                          v     ^
                        380   500
```

BALANCED OPENING YEAR VOLUMES:

2013

```
                        50   580
                          v     ^
          50 <     IN =     1330 <   640
         140 >    OUT =     1320 >   310
                          v     ^
                        380   500
```

EVENING PEAK HOUR

EXISTING PEAK HOUR TURNING MOVEMENT VOLUMES (AUTOS):

2011

```
                   10   200   119
                 <     v     >
           5 ^                   ^   100
          31 >                   <    56
          25 v                   v   186
                 <     ^     >
                   13    60   231
```

EXISTING PEAK HOUR COUNT YEAR (AUTOS):

2011

```
                        329   165
                          v     ^
          79 <     IN =     1036 <   342
          61 >    OUT =     1036 >   381
                          v     ^
                        411   304
```

EXISTING PEAK HOUR TURNING MOVEMENT VOLUMES (TRUCKS IN PCE'S):

```
                    0    23     0
                 <     v     >
           0 ^                   ^     0
           0 >                   <     2
           0 v                   v     9
                 <     ^     >
                    0    20     6
```

PCE FACTORS BY AXLE:

2: 1.5 3: 2 4+: 3.0

TOTAL EXISTING PEAK HOUR TURNING MOVEMENT VOLUMES (PCES):

2011

```
                   10   223   119
                 <     v     >
           5 ^                   ^   100
          31 >                   <    58
          25 v                   v   195
                 <     ^     >
                   13    80   237
```

EXISTING PEAK PERIOD MODEL YEAR (AUTO):

2000

```
                         0     0
                          v     ^
           0 <     IN =     1546 <   967
           0 >    OUT =     1546 >   579
                          v     ^
                        967   579
```

EXISTING PEAK PERIOD MODEL YEAR (TRUCKS IN PCE'S):

1994

```
                         0     0
                          v     ^
           0 <     IN =        5 <     2
           0 >    OUT =        5 >     3
                          v     ^
                          2     3
```

EXISTING PEAK HOUR MODEL YEAR (PCE'S):

PHF FOR CARS: 0.28

PHF FOR TRUCKS: 0.25

```
                         0     0
                          v     ^
           0 <     IN =      434 <   271
           0 >    OUT =      434 >   163
                          v     ^
                        271   163
```

FUTURE PEAK PERIOD MODEL YEAR (AUTO):

2030

```
                         2     0
                          v     ^
        1120 <     IN =     1348 <  1122
         215 >    OUT =     1348 >   224
                          v     ^
                          4     9
```

FUTURE PEAK PERIOD MODEL YEAR (TRUCKS IN PCE'S):

2020

```
                         0     0
                          v     ^
          26 <     IN =       60 <    26
          27 >    OUT =       60 >    34
                          v     ^
                          0     7
```

FUTURE PEAK HOUR MODEL YEAR (PCE'S):

PHF FOR CARS: 0.28

PHF FOR TRUCKS: 0.25

```
                         1     0
                          v     ^
         320 <     IN =      392 <   321
          67 >    OUT =      392 >    71
                          v     ^
                          1     4
```

RAW GROWTH (PCE'S): 2000 TO 2030

CONVERSION OF TRUCKS TO: 2025

FACTOR = 1.25

```
                         1     0
                          v     ^
         322 <                <    51
          69 >                >   -90
                          v     ^
                       -270  -158
```

ADJUSTED GROWTH (PCE'S): 2000 TO 2030

10 MINIMUM GROWTH %

```
                        40    20
                          v     ^
         320 <     IN =      160 <    50
          70 >    OUT =      380 >    40
                          v     ^
                          0     0
```

OPENING YEAR GROWTH: 2011 TO 2013

2 YEARS

```
                         0     0
                          v     ^
          20 <                <     0
           0 >                >     0
                          v     ^
                          0     0
```

INITIAL OPENING YEAR VOLUMES:

2013

```
                       350   190
                          v     ^
         100 <     IN =     1090 <   350
          60 >    OUT =     1120 >   390
                          v     ^
                        440   330
```

BALANCED OPENING YEAR VOLUMES:

2013

```
                       360   190
                          v     ^
         100 <     IN =     1120 <   360
          60 >    OUT =     1120 >   390
                          v     ^
                        440   340
```

CAMPUS STREET (NS) / STEWART STREET (EW)

FUTURE DIRECTIONAL TURN VOLUMES FROM FUTURE DIRECTIONAL LINK VOLUMES

NCHRP 255

OPENING YEAR (2013) TRAFFIC CONDITIONS									
MORNING PEAK HOUR INPUT DATA					EVENING PEAK HOUR INPUT DATA				
APPROACH	TURNING MOVEMENT	BASE YEAR COUNT	APPROACH	OPENING YEAR TOTAL	APPROACH	TURNING MOVEMENT	BASE YEAR COUNT	APPROACH	OPENING YEAR TOTAL
NORTH	LEFT	**11**	SOUTH LEG		NORTH	LEFT	**13**	SOUTH LEG	
BOUND	THRU	**263**	IN ...	**500**	BOUND	THRU	**80**	IN ...	**340**
	RIGHT	**225**	OUT ...	**380**		RIGHT	**237**	OUT ...	**440**
SOUTH	LEFT	**9**	NORTH LEG		SOUTH	LEFT	**119**	NORTH LEG	
BOUND	THRU	**36**	IN ...	**50**	BOUND	THRU	**223**	IN ...	**360**
	RIGHT	**1**	OUT ...	**580**		RIGHT	**10**	OUT ...	**190**
EAST	LEFT	**31**	WEST LEG		EAST	LEFT	**5**	WEST LEG	
BOUND	THRU	**54**	IN ...	**140**	BOUND	THRU	**31**	IN ...	**60**
	RIGHT	**20**	OUT ...	**50**		RIGHT	**25**	OUT ...	**100**
WEST	LEFT	**322**	EAST LEG		WEST	LEFT	**195**	EAST LEG	
BOUND	THRU	**38**	IN ...	**640**	BOUND	THRU	**58**	IN ...	**360**
	RIGHT	**281**	OUT ...	**310**		RIGHT	**100**	OUT ...	**390**

OPENING YEAR (2013) TRAFFIC CONDITIONS									
MORNING PEAK HOUR RESULTS					EVENING PEAK HOUR RESULTS				
APPROACH	TURNING MOVEMENT	BASE YEAR COUNT	OPENING YEAR FORECAST	PEAK - DAILY RELATIONSHIP	APPROACH	TURNING MOVEMENT	BASE YEAR COUNT	OPENING YEAR FORECAST	PEAK - DAILY RELATIONSHIP
NORTH	LEFT	**11**	**12**	NORTH LEG	NORTH	LEFT	**13**	**17**	NORTH LEG
BOUND	THRU	**263**	**271**	RATIO **10.2%**	BOUND	THRU	**80**	**84**	RATIO **8.7%**
	RIGHT	**225**	**227**	ADT 6,300		RIGHT	**237**	**239**	ADT 6,300
SOUTH	LEFT	**9**	**10**	SOUTH LEG	SOUTH	LEFT	**119**	**121**	SOUTH LEG
BOUND	THRU	**36**	**38**	RATIO **10.1%**	BOUND	THRU	**223**	**227**	RATIO **8.8%**
	RIGHT	**1**	**1**	ADT 9,000		RIGHT	**10**	**13**	ADT 9,000
EAST	LEFT	**31**	**41**	EAST LEG	EAST	LEFT	**5**	**5**	EAST LEG
BOUND	THRU	**54**	**73**	RATIO **11.2%**	BOUND	THRU	**31**	**32**	RATIO **8.9%**
	RIGHT	**20**	**26**	ADT 8,600		RIGHT	**25**	**26**	ADT 8,600
WEST	LEFT	**322**	**332**	WEST LEG	WEST	LEFT	**195**	**201**	WEST LEG
BOUND	THRU	**38**	**38**	RATIO **10.0%**	BOUND	THRU	**58**	**71**	RATIO **8.6%**
	RIGHT	**281**	**281**	ADT 1,900		RIGHT	**100**	**101**	ADT 1,900

CAMPUS STREET (NS) / UNIVERSITY AVENUE (EW)

MORNING PEAK HOUR

EXISTING PEAK HOUR TURNING MOVEMENT VOLUMES (AUTOS):
2011

```
                167   147    0
                 <     v     >
        224 ^                  ^   0
          0 >                  <   0
         68 v                  v   0
                 <     ^     >
                 41   290    1
```

EXISTING PEAK HOUR COUNT YEAR (AUTOS):
2011

```
                      314   514
                       v     ^
        208 <    IN =   938 <   0
        292 >   OUT =   938 >   1
                       v     ^
                      215   332
```

EXISTING PEAK HOUR TURNING MOVEMENT VOLUMES (TRUCKS IN PCE'S):

```
                  4     6     2
                  <     v     >
          2 ^                  ^   0
          0 >                  <   0
          0 v                  v   0
                  <     ^     >
```

PCE FACTORS BY AXLE:
2: 1.5 3: 2.0 4+: 3.0

```
                  2     8     0
```

TOTAL EXISTING PEAK HOUR TURNING MOVEMENT VOLUMES (PCES):
2011

```
                171   153     2
                 <     v     >
        226 ^                  ^   0
          0 >                  <   0
         68 v                  v   0
                 <     ^     >
                 43   298     1
```

EXISTING PEAK PERIOD MODEL YEAR (AUTO):
2000

```
                      461   301
                       v     ^
        537 <    IN =   1100 <   0
        557 >   OUT =   1100 >   0
                       v     ^
                      262    82
```

EXISTING PEAK PERIOD MODEL YEAR (TRUCKS IN PCE'S):
1994

```
                        4     5
                        v     ^
          5 <    IN =    16 <   0
         10 >   OUT =    15 >   0
                        v     ^
                        5     2
```

EXISTING PEAK HOUR MODEL YEAR (PCE'S):
PHF FOR CARS: 0.38
PHF FOR TRUCKS: 0.333

```
                      177   116
                       v     ^
        206 <    IN =   423 <   0
        215 >   OUT =   423 >   0
                       v     ^
                      101    32
```

FUTURE PEAK PERIOD MODEL YEAR (AUTO):
2030

```
                       19   134
                        v     ^
         90 <    IN =   1264 <   0
       1165 >   OUT =   1264 >   0
                        v     ^
                     1040    80
```

FUTURE PEAK PERIOD MODEL YEAR (TRUCKS IN PCE'S):
2020

```
                        2     3
                        v     ^
          2 <    IN =    5 <   0
          3 >   OUT =    5 >   0
                        v     ^
                        0     0
```

FUTURE PEAK HOUR MODEL YEAR (PCE'S):
PHF FOR CARS: 0.38
PHF FOR TRUCKS: 0.333

```
                        8    52
                        v     ^
         35 <    IN =   482 <   0
        444 >   OUT =   482 >   0
                        v     ^
                      395    30
```

RAW GROWTH (PCE'S): 2000 TO 2030
CONVERSION OF TRUCKS TO: 2025
FACTOR = 1.25

```
                     -169   -64
                       v     ^
       -171 <                <   0
        228 >                >   0
                       v     ^
                      294    -2
```

ADJUSTED GROWTH (PCE'S): 2000 TO 2030
10 MINIMUM GROWTH %

```
                       30    50
                        v     ^
         20 <    IN =   260 <   0
        230 >   OUT =   360 >   0
                        v     ^
                      290     0
```

OPENING YEAR GROWTH: 2011 TO 2013
2 YEARS

```
                        0     0
                        v     ^
          0 <                 <   0
         20 >                 >   0
                        v     ^
                       20     0
```

INITIAL OPENING YEAR VOLUMES:
2013

```
                      330   520
                       v     ^
        210 <    IN =   980 <   0
        310 >   OUT =   970 >   0
                       v     ^
                      240   340
```

BALANCED OPENING YEAR VOLUMES:
2013

```
                      330   530
                       v     ^
        210 <    IN =   980 <   0
        310 >   OUT =   980 >   0
                       v     ^
                      240   340
```

EVENING PEAK HOUR

EXISTING PEAK HOUR TURNING MOVEMENT VOLUMES (AUTOS):
2011

```
                204   200    0
                 <     v     >
        129 ^                  ^   0
          0 >                  <   0
         49 v                  v   0
                 <     ^     >
                 62   123    0
```

EXISTING PEAK HOUR COUNT YEAR (AUTOS):
2011

```
                      404   252
                       v     ^
        266 <    IN =   767 <   0
        178 >   OUT =   767 >   0
                       v     ^
                      249   185
```

EXISTING PEAK HOUR TURNING MOVEMENT VOLUMES (TRUCKS IN PCE'S):

```
                  8    23     0
                  <     v     >
          0 ^                  ^   0
          0 >                  <   0
          5 v                  v   2
                  <     ^     >
```

PCE FACTORS BY AXLE:
2: 1.5 3: 2 4+: 3.0

```
                  8    24     0
```

TOTAL EXISTING PEAK HOUR TURNING MOVEMENT VOLUMES (PCES):
2011

```
                212   223     0
                 <     v     >
        129 ^                  ^   0
          0 >                  <   0
         54 v                  v   2
                 <     ^     >
                 70   147     0
```

EXISTING PEAK PERIOD MODEL YEAR (AUTO):
2000

```
                      852   346
                       v     ^
       1097 <    IN =   1672 <   0
        566 >   OUT =   1672 >   0
                       v     ^
                      229   254
```

EXISTING PEAK PERIOD MODEL YEAR (TRUCKS IN PCE'S):
1994

```
                        2     5
                        v     ^
          4 <    IN =    17 <   0
         15 >   OUT =    20 >   0
                        v     ^
                       11     0
```

EXISTING PEAK HOUR MODEL YEAR (PCE'S):
PHF FOR CARS: 0.28
PHF FOR TRUCKS: 0.25

```
                      239    98
                       v     ^
        308 <    IN =   472 <   0
        162 >   OUT =   473 >   0
                       v     ^
                       67    71
```

FUTURE PEAK PERIOD MODEL YEAR (AUTO):
2030

```
                      137    27
                       v     ^
       1114 <    IN =   1374 <   0
        242 >   OUT =   1375 >   0
                       v     ^
                      234   995
```

FUTURE PEAK PERIOD MODEL YEAR (TRUCKS IN PCE'S):
2020

```
                        2     6
                        v     ^
          2 <    IN =    11 <   0
          9 >   OUT =    11 >   0
                        v     ^
                        3     0
```

FUTURE PEAK HOUR MODEL YEAR (PCE'S):
PHF FOR CARS: 0.28
PHF FOR TRUCKS: 0.25

```
                       39     9
                        v     ^
        312 <    IN =   387 <   0
         70 >   OUT =   388 >   0
                        v     ^
                       66   279
```

RAW GROWTH (PCE'S): 2000 TO 2030
CONVERSION OF TRUCKS TO: 2025
FACTOR = 1.25

```
                     -200   -89
                       v     ^
          4 <                <   0
        -93 >                >   0
                       v     ^
                       -1   207
```

ADJUSTED GROWTH (PCE'S): 2000 TO 2030
10 MINIMUM GROWTH %

```
                       40    30
                        v     ^
         30 <    IN =   270 <   0
         20 >   OUT =    60 >   0
                        v     ^
                        0   210
```

OPENING YEAR GROWTH: 2011 TO 2013
2 YEARS

```
                        0     0
                        v     ^
          0 <                 <   0
          0 >                 >   0
                        v     ^
                        0    10
```

INITIAL OPENING YEAR VOLUMES:
2013

```
                      440   280
                       v     ^
        280 <    IN =   850 <   0
        180 >   OUT =   840 >   0
                       v     ^
                      280   230
```

BALANCED OPENING YEAR VOLUMES:
2013

```
                      440   280
                       v     ^
        280 <    IN =   850 <   0
        180 >   OUT =   840 >   0
                       v     ^
                      280   230
```

CAMPUS STREET (NS) / UNIVERSITY AVENUE (EW)

FUTURE DIRECTIONAL TURN VOLUMES FROM FUTURE DIRECTIONAL LINK VOLUMES

NCHRP 255

OPENING YEAR (2013) TRAFFIC CONDITIONS									
MORNING PEAK HOUR INPUT DATA					EVENING PEAK HOUR INPUT DATA				
APPROACH	TURNING MOVEMENT	BASE YEAR COUNT	APPROACH	OPENING YEAR TOTAL	APPROACH	TURNING MOVEMENT	BASE YEAR COUNT	APPROACH	OPENING YEAR TOTAL
NORTH	LEFT	**43**	SOUTH LEG		NORTH	LEFT	**70**	SOUTH LEG	
BOUND	THRU	**298**	IN ...	**340**	BOUND	THRU	**147**	IN ...	**230**
	RIGHT	**1**	OUT ...	**240**		RIGHT	**0**	OUT ...	**280**
SOUTH	LEFT	**2**	NORTH LEG		SOUTH	LEFT	**0**	NORTH LEG	
BOUND	THRU	**153**	IN ...	**330**	BOUND	THRU	**223**	IN ...	**440**
	RIGHT	**171**	OUT ...	**530**		RIGHT	**212**	OUT ...	**280**
EAST	LEFT	**226**	WEST LEG		EAST	LEFT	**129**	WEST LEG	
BOUND	THRU	**0**	IN ...	**310**	BOUND	THRU	**0**	IN ...	**180**
	RIGHT	**68**	OUT ...	**210**		RIGHT	**54**	OUT ...	**280**
WEST	LEFT	**0**	EAST LEG		WEST	LEFT	**2**	EAST LEG	
BOUND	THRU	**0**	IN ...	**0**	BOUND	THRU	**0**	IN ...	**0**
	RIGHT	**0**	OUT ...	**0**		RIGHT	**0**	OUT ...	**0**

OPENING YEAR (2013) TRAFFIC CONDITIONS									
MORNING PEAK HOUR RESULTS					EVENING PEAK HOUR RESULTS				
APPROACH	TURNING MOVEMENT	BASE YEAR COUNT	OPENING YEAR FORECAST	PEAK - DAILY RELATIONSHIP	APPROACH	TURNING MOVEMENT	BASE YEAR COUNT	OPENING YEAR FORECAST	PEAK - DAILY RELATIONSHIP
NORTH	LEFT	**43**	**45**	NORTH LEG	NORTH	LEFT	**70**	**72**	NORTH LEG
BOUND	THRU	**298**	**307**	RATIO **9.8%**	BOUND	THRU	**147**	**155**	RATIO **8.2%**
	RIGHT	**1**	**2**	ADT 9,000		RIGHT	**0**	**0**	ADT 9,000
SOUTH	LEFT	**2**	**3**	SOUTH LEG	SOUTH	LEFT	**0**	**0**	SOUTH LEG
BOUND	THRU	**153**	**163**	RATIO **10.2%**	BOUND	THRU	**223**	**227**	RATIO **8.8%**
	RIGHT	**171**	**177**	ADT 5,800		RIGHT	**212**	**219**	ADT 5,800
EAST	LEFT	**226**	**233**	EAST LEG	EAST	LEFT	**129**	**133**	EAST LEG
BOUND	THRU	**0**	**0**	RATIO **#DIV/0!**	BOUND	THRU	**0**	**0**	RATIO **#DIV/0!**
	RIGHT	**68**	**77**	ADT 0		RIGHT	**54**	**56**	ADT 0
WEST	LEFT	**0**	**0**	WEST LEG	WEST	LEFT	**2**	**3**	WEST LEG
BOUND	THRU	**0**	**0**	RATIO **10.0%**	BOUND	THRU	**0**	**0**	RATIO **9.1%**
	RIGHT	**0**	**0**	ADT 5,300		RIGHT	**0**	**0**	ADT 5,300

CAMPUS STREET (NS) / PROSPECT AVENUE (EW)

MORNING PEAK HOUR

EXISTING PEAK HOUR TURNING MOVEMENT VOLUMES (AUTOS):

2011

			35	151	0	
			<	v	>	
9	^				^	0
0	>				<	0
41	v				v	0
			<	^	>	
			172	396	0	

EXISTING PEAK HOUR COUNT YEAR (AUTOS):

2011

				186	405	
				v	^	
207	<	IN =		804	<	0
50	>	OUT =		804	>	0
				v	^	
				192	568	

EXISTING PEAK HOUR TURNING MOVEMENT VOLUMES (TRUCKS IN PCE'S):

			0	6	5	
			<	v	>	
0	^				^	0
0	>				<	0
3	v				v	0
			<	^	>	
			0	9	0	

PCE FACTORS BY AXLE:
2: 1.5 3: 2.0 4+: 3.0

TOTAL EXISTING PEAK HOUR TURNING MOVEMENT VOLUMES (PCES):

2011

			35	157	5	
			<	v	>	
9	^				^	0
0	>				<	0
44	v				v	0
			<	^	>	
			172	405	0	

EXISTING PEAK PERIOD MODEL YEAR (AUTO):

2000

				262	82	
				v	^	
0	<	IN =		344	<	0
0	>	OUT =		344	>	0
				v	^	
				262	82	

EXISTING PEAK PERIOD MODEL YEAR (TRUCKS IN PCE'S):

1994

				5	2	
				v	^	
0	<	IN =		7	<	0
0	>	OUT =		7	>	0
				v	^	
				5	2	

EXISTING PEAK HOUR MODEL YEAR (PCE'S):
PHF FOR CARS: 0.38
PHF FOR TRUCKS: 0.333

				101	32	
				v	^	
0	<	IN =		133	<	0
0	>	OUT =		133	>	0
				v	^	
				101	32	

FUTURE PEAK PERIOD MODEL YEAR (AUTO):

2030

				757	90	
				v	^	
0	<	IN =		847	<	0
0	>	OUT =		847	>	0
				v	^	
				757	90	

FUTURE PEAK PERIOD MODEL YEAR (TRUCKS IN PCE'S):

2020

				27	67	
				v	^	
0	<	IN =		94	<	0
0	>	OUT =		94	>	0
				v	^	
				27	67	

FUTURE PEAK HOUR MODEL YEAR (PCE'S):
PHF FOR CARS: 0.38
PHF FOR TRUCKS: 0.333

				297	57	
				v	^	
0	<	IN =		353	<	0
0	>	OUT =		353	>	0
				v	^	
				297	57	

RAW GROWTH (PCE'S): 2000 TO 2030
CONVERSION OF TRUCKS TO: 2025
FACTOR = 1.25

				197	30	
				v	^	
0	<				<	0
0	>				>	0
				v	^	
				197	30	

ADJUSTED GROWTH (PCE'S): 2000 TO 2030
10 MINIMUM GROWTH %

				200	40	
				v	^	
20	<	IN =		240	<	0
10	>	OUT =		260	>	0
				v	^	
				200	30	

OPENING YEAR GROWTH: 2011 TO 2013
2 YEARS

				10	0	
				v	^	
0	<				<	0
0	>				>	0
				v	^	
				10	0	

INITIAL OPENING YEAR VOLUMES:

2013

				210	410	
				v	^	
210	<	IN =		840	<	0
50	>	OUT =		840	>	10
				v	^	
				210	580	

BALANCED OPENING YEAR VOLUMES:

2013

				210	410	
				v	^	
210	<	IN =		840	<	0
50	>	OUT =		840	>	10
				v	^	
				210	580	

EVENING PEAK HOUR

EXISTING PEAK HOUR TURNING MOVEMENT VOLUMES (AUTOS):

2011

			22	249	0	
			<	v	>	
9	^				^	0
0	>				<	0
136	v				v	0
			<	^	>	
			24	138	0	

EXISTING PEAK HOUR COUNT YEAR (AUTOS):

2011

				271	147	
				v	^	
46	<	IN =		578	<	0
145	>	OUT =		578	>	0
				v	^	
				385	162	

EXISTING PEAK HOUR TURNING MOVEMENT VOLUMES (TRUCKS IN PCE'S):

			0	20	0	
			<	v	>	
0	^				^	0
0	>				<	0
0	v				v	0
			<	^	>	
			0	38	2	

PCE FACTORS BY AXLE:
2: 1.5 3: 2 4+: 3.0

TOTAL EXISTING PEAK HOUR TURNING MOVEMENT VOLUMES (PCES):

2011

			22	269	0	
			<	v	>	
9	^				^	0
0	>				<	0
136	v				v	0
			<	^	>	
			24	176	2	

EXISTING PEAK PERIOD MODEL YEAR (AUTO):

2000

				229	254	
				v	^	
0	<	IN =		483	<	0
0	>	OUT =		483	>	0
				v	^	
				229	254	

EXISTING PEAK PERIOD MODEL YEAR (TRUCKS IN PCE'S):

1994

				11	0	
				v	^	
0	<	IN =		11	<	0
0	>	OUT =		11	>	0
				v	^	
				11	0	

EXISTING PEAK HOUR MODEL YEAR (PCE'S):
PHF FOR CARS: 0.28
PHF FOR TRUCKS: 0.25

				67	71	
				v	^	
0	<	IN =		138	<	0
0	>	OUT =		138	>	0
				v	^	
				67	71	

FUTURE PEAK PERIOD MODEL YEAR (AUTO):

2030

				225	811	
				v	^	
0	<	IN =		1036	<	0
0	>	OUT =		1036	>	0
				v	^	
				225	811	

FUTURE PEAK PERIOD MODEL YEAR (TRUCKS IN PCE'S):

2020

				48	56	
				v	^	
0	<	IN =		104	<	0
0	>	OUT =		104	>	0
				v	^	
				48	56	

FUTURE PEAK HOUR MODEL YEAR (PCE'S):
PHF FOR CARS: 0.28
PHF FOR TRUCKS: 0.25

				75	241	
				v	^	
0	<	IN =		316	<	0
0	>	OUT =		316	>	0
				v	^	
				75	241	

RAW GROWTH (PCE'S): 2000 TO 2030
CONVERSION OF TRUCKS TO: 2025
FACTOR = 1.25

				10	173	
				v	^	
0	<				<	0
0	>				>	0
				v	^	
				10	173	

ADJUSTED GROWTH (PCE'S): 2000 TO 2030
10 MINIMUM GROWTH %

				30	170	
				v	^	
0	<	IN =		210	<	0
10	>	OUT =		180	>	0
				v	^	
				10	170	

OPENING YEAR GROWTH: 2011 TO 2013
2 YEARS

				0	10	
				v	^	
0	<				<	0
0	>				>	0
				v	^	
				0	10	

INITIAL OPENING YEAR VOLUMES:

2013

				290	200	
				v	^	
50	<	IN =		650	<	0
150	>	OUT =		660	>	0
				v	^	
				410	210	

BALANCED OPENING YEAR VOLUMES:

2013

				290	200	
				v	^	
50	<	IN =		650	<	0
150	>	OUT =		660	>	0
				v	^	
				410	210	

CAMPUS STREET (NS) / PROSPECT AVENUE (EW)

FUTURE DIRECTIONAL TURN VOLUMES FROM FUTURE DIRECTIONAL LINK VOLUMES

NCHRP 255

OPENING YEAR (2013) TRAFFIC CONDITIONS									
MORNING PEAK HOUR INPUT DATA					EVENING PEAK HOUR INPUT DATA				
APPROACH	TURNING MOVEMENT	BASE YEAR COUNT	APPROACH	OPENING YEAR TOTAL	APPROACH	TURNING MOVEMENT	BASE YEAR COUNT	APPROACH	OPENING YEAR TOTAL
NORTH	LEFT	**172**	SOUTH LEG		NORTH	LEFT	**24**	SOUTH LEG	
BOUND	THRU	**405**	IN ...	**580**	BOUND	THRU	**176**	IN ...	**210**
	RIGHT	**0**	OUT ...	**210**		RIGHT	**2**	OUT ...	**410**
SOUTH	LEFT	**5**	NORTH LEG		SOUTH	LEFT	**0**	NORTH LEG	
BOUND	THRU	**157**	IN ...	**210**	BOUND	THRU	**269**	IN ...	**290**
	RIGHT	**35**	OUT ...	**410**		RIGHT	**22**	OUT ...	**200**
EAST	LEFT	**9**	WEST LEG		EAST	LEFT	**9**	WEST LEG	
BOUND	THRU	**0**	IN ...	**50**	BOUND	THRU	**0**	IN ...	**150**
	RIGHT	**44**	OUT ...	**210**		RIGHT	**136**	OUT ...	**50**
WEST	LEFT	**0**	EAST LEG		WEST	LEFT	**0**	EAST LEG	
BOUND	THRU	**0**	IN ...	**0**	BOUND	THRU	**0**	IN ...	**0**
	RIGHT	**0**	OUT ...	**10**		RIGHT	**0**	OUT ...	**0**

OPENING YEAR (2013) TRAFFIC CONDITIONS									
MORNING PEAK HOUR RESULTS					EVENING PEAK HOUR RESULTS				
APPROACH	TURNING MOVEMENT	BASE YEAR COUNT	OPENING YEAR FORECAST	PEAK - DAILY RELATIONSHIP	APPROACH	TURNING MOVEMENT	BASE YEAR COUNT	OPENING YEAR FORECAST	PEAK - DAILY RELATIONSHIP
NORTH	LEFT	**172**	**176**	NORTH LEG	NORTH	LEFT	**24**	**25**	NORTH LEG
BOUND	THRU	**405**	**418**	RATIO **11.1%**	BOUND	THRU	**176**	**189**	RATIO **8.7%**
	RIGHT	**0**	**0**	ADT 5,800		RIGHT	**2**	**3**	ADT 5,800
SOUTH	LEFT	**5**	**10**	SOUTH LEG	SOUTH	LEFT	**0**	**0**	SOUTH LEG
BOUND	THRU	**157**	**167**	RATIO **8.6%**	BOUND	THRU	**269**	**278**	RATIO **6.8%**
	RIGHT	**35**	**37**	ADT 9,400		RIGHT	**22**	**25**	ADT 9,400
EAST	LEFT	**9**	**10**	EAST LEG	EAST	LEFT	**9**	**11**	EAST LEG
BOUND	THRU	**0**	**0**	RATIO **#DIV/0!**	BOUND	THRU	**0**	**0**	RATIO **#DIV/0!**
	RIGHT	**44**	**46**	ADT 0		RIGHT	**136**	**141**	ADT 0
WEST	LEFT	**0**	**0**	WEST LEG	WEST	LEFT	**0**	**0**	WEST LEG
BOUND	THRU	**0**	**0**	RATIO **12.2%**	BOUND	THRU	**0**	**0**	RATIO **9.2%**
	RIGHT	**0**	**0**	ADT 2,200		RIGHT	**0**	**0**	ADT 2,200

CAMPUS STREET (NS) / SAN JUAN STREET (EW)

MORNING PEAK HOUR

EXISTING PEAK HOUR TURNING MOVEMENT VOLUMES (AUTOS):
2011

```
                    6   142    0
                  <   v    >
          3 ^                ^    0
          0 >                <    0
         14 v                v    0
                  <   ^    >
                 45   727    0
```

EXISTING PEAK HOUR COUNT YEAR (AUTOS):
2011

```
                        148   730
                         v     ^
        51 <     IN =          937 <    0
        17 >    OUT =          937 >    0
                         v     ^
                        156   772
```

EXISTING PEAK HOUR TURNING MOVEMENT VOLUMES (TRUCKS IN PCE'S):

```
                    0    18    0
                  <   v    >
          0 ^                ^    0
          0 >                <    0
          0 v                v    0
                  <   ^    >
                  2    30    0
```

PCE FACTORS BY AXLE:
2: 1.5 3: 2.0 4+: 3.0

TOTAL EXISTING PEAK HOUR TURNING MOVEMENT VOLUMES (PCES):
2011

```
                    6   160    0
                  <   v    >
          3 ^                ^    0
          0 >                <    0
         14 v                v    0
                  <   ^    >
                 47   757    0
```

EXISTING PEAK PERIOD MODEL YEAR (AUTO):
2000

```
                        60    82
                         v     ^
         0 <     IN =          142 <    0
         0 >    OUT =          142 >    0
                         v     ^
                         60    82
```

EXISTING PEAK PERIOD MODEL YEAR (TRUCKS IN PCE'S):
1994

```
                         0     0
                         v     ^
         0 <     IN =            0 <    0
         0 >    OUT =            0 >    0
                         v     ^
                          0     0
```

EXISTING PEAK HOUR MODEL YEAR (PCE'S):
PHF FOR CARS: 0.38
PHF FOR TRUCKS: 0.333

```
                        23    31
                         v     ^
         0 <     IN =           54 <    0
         0 >    OUT =           54 >    0
                         v     ^
                        23    31
```

FUTURE PEAK PERIOD MODEL YEAR (AUTO):
2030

```
                        82  1245
                         v     ^
        69 <     IN =         2349 <    0
      2197 >    OUT =         2350 >    0
                         v     ^
                      1036    70
```

FUTURE PEAK PERIOD MODEL YEAR (TRUCKS IN PCE'S):
2020

```
                        27    67
                         v     ^
         0 <     IN =           94 <    0
         0 >    OUT =           94 >    0
                         v     ^
                        27    67
```

FUTURE PEAK HOUR MODEL YEAR (PCE'S):
PHF FOR CARS: 0.38
PHF FOR TRUCKS: 0.333

```
                        40   495
                         v     ^
        26 <     IN =          924 <    0
       835 >    OUT =          924 >    0
                         v     ^
                       403    49
```

RAW GROWTH (PCE'S): 2000 TO 2030
CONVERSION OF TRUCKS TO: 2025
FACTOR = 1.25

```
                        20   470
                         v     ^
        26 <                   <    0
       835 >                   >    0
                         v     ^
                       382    23
```

ADJUSTED GROWTH (PCE'S): 2000 TO 2030
10 MINIMUM GROWTH %

```
                        20   470
                         v     ^
        30 <     IN =          870 <    0
       830 >    OUT =          880 >    0
                         v     ^
                       380    20
```

OPENING YEAR GROWTH: 2011 TO 2013
2 YEARS

```
                         0    30
                         v     ^
         0 <                   <    0
        60 >                   >    0
                         v     ^
                        30     0
```

INITIAL OPENING YEAR VOLUMES:
2013

```
                       170   790
                         v     ^
        50 <     IN =         1050 <    0
        80 >    OUT =         1040 >    0
                         v     ^
                       200   800
```

BALANCED OPENING YEAR VOLUMES:
2013

```
                       170   800
                         v     ^
        50 <     IN =         1050 <    0
        80 >    OUT =         1050 >    0
                         v     ^
                       200   800
```

EVENING PEAK HOUR

EXISTING PEAK HOUR TURNING MOVEMENT VOLUMES (AUTOS):
2011

```
                    5   513    0
                  <   v    >
          1 ^                ^    0
          0 >                <    0
         13 v                v    0
                  <   ^    >
                 19   198    0
```

EXISTING PEAK HOUR COUNT YEAR (AUTOS):
2011

```
                       518   199
                         v     ^
        24 <     IN =          749 <    0
        14 >    OUT =          749 >    0
                         v     ^
                       526   217
```

EXISTING PEAK HOUR TURNING MOVEMENT VOLUMES (TRUCKS IN PCE'S):

```
                    0    57    0
                  <   v    >
          0 ^                ^    0
          0 >                <    0
          0 v                v    0
                  <   ^    >
                  0    39    0
```

PCE FACTORS BY AXLE:
2: 1.5 3: 2 4+: 3.0

TOTAL EXISTING PEAK HOUR TURNING MOVEMENT VOLUMES (PCES):
2011

```
                    5   570    0
                  <   v    >
          1 ^                ^    0
          0 >                <    0
         13 v                v    0
                  <   ^    >
                 19   237    0
```

EXISTING PEAK PERIOD MODEL YEAR (AUTO):
2000

```
                       211   140
                         v     ^
         0 <     IN =          351 <    0
         0 >    OUT =          351 >    0
                         v     ^
                       211   140
```

EXISTING PEAK PERIOD MODEL YEAR (TRUCKS IN PCE'S):
1994

```
                         0     0
                         v     ^
         0 <     IN =            0 <    0
         0 >    OUT =            0 >    0
                         v     ^
                          0     0
```

EXISTING PEAK HOUR MODEL YEAR (PCE'S):
PHF FOR CARS: 0.28
PHF FOR TRUCKS: 0.25

```
                        59    39
                         v     ^
         0 <     IN =           98 <    0
         0 >    OUT =           98 >    0
                         v     ^
                        59    39
```

FUTURE PEAK PERIOD MODEL YEAR (AUTO):
2030

```
                      1638   197
                         v     ^
      3338 <     IN =         4277 <    0
       824 >    OUT =         4278 >    0
                         v     ^
                       743  1815
```

FUTURE PEAK PERIOD MODEL YEAR (TRUCKS IN PCE'S):
2020

```
                        48    56
                         v     ^
         0 <     IN =          104 <    0
         0 >    OUT =          104 >    0
                         v     ^
                        48    56
```

FUTURE PEAK HOUR MODEL YEAR (PCE'S):
PHF FOR CARS: 0.28
PHF FOR TRUCKS: 0.25

```
                       471    69
                         v     ^
       935 <     IN =         1224 <    0
       231 >    OUT =         1224 >    0
                         v     ^
                       220   522
```

RAW GROWTH (PCE'S): 2000 TO 2030
CONVERSION OF TRUCKS TO: 2025
FACTOR = 1.25

```
                       415    33
                         v     ^
       935 <                   <    0
       231 >                   >    0
                         v     ^
                       164   487
```

ADJUSTED GROWTH (PCE'S): 2000 TO 2030
10 MINIMUM GROWTH %

```
                       410    30
                         v     ^
       930 <     IN =         1130 <    0
       230 >    OUT =         1120 >    0
                         v     ^
                       160   490
```

OPENING YEAR GROWTH: 2011 TO 2013
2 YEARS

```
                        30     0
                         v     ^
        60 <                   <    0
        20 >                   >    0
                         v     ^
                        10    30
```

INITIAL OPENING YEAR VOLUMES:
2013

```
                       610   240
                         v     ^
        80 <     IN =         930 <    0
        30 >    OUT =         910 >    0
                         v     ^
                       590   290
```

BALANCED OPENING YEAR VOLUMES:
2013

```
                       610   250
                         v     ^
        80 <     IN =         930 <    0
        30 >    OUT =         930 >    0
                         v     ^
                       600   290
```

CAMPUS STREET (NS) / SAN JUAN STREET (EW)

FUTURE DIRECTIONAL TURN VOLUMES FROM FUTURE DIRECTIONAL LINK VOLUMES

NCHRP 255

OPENING YEAR (2013) TRAFFIC CONDITIONS									
MORNING PEAK HOUR INPUT DATA					EVENING PEAK HOUR INPUT DATA				
APPROACH	TURNING MOVEMENT	BASE YEAR COUNT	APPROACH	OPENING YEAR TOTAL	APPROACH	TURNING MOVEMENT	BASE YEAR COUNT	APPROACH	OPENING YEAR TOTAL
NORTH	LEFT	**47**	SOUTH LEG		NORTH	LEFT	**19**	SOUTH LEG	
BOUND	THRU	**757**	IN ...	**800**	BOUND	THRU	**237**	IN ...	**290**
	RIGHT	**0**	OUT ...	**200**		RIGHT	**0**	OUT ...	**600**
SOUTH	LEFT	**0**	NORTH LEG		SOUTH	LEFT	**0**	NORTH LEG	
BOUND	THRU	**160**	IN ...	**170**	BOUND	THRU	**570**	IN ...	**610**
	RIGHT	**6**	OUT ...	**800**		RIGHT	**5**	OUT ...	**250**
EAST	LEFT	**3**	WEST LEG		EAST	LEFT	**1**	WEST LEG	
BOUND	THRU	**0**	IN ...	**80**	BOUND	THRU	**0**	IN ...	**30**
	RIGHT	**14**	OUT ...	**50**		RIGHT	**13**	OUT ...	**80**
WEST	LEFT	**0**	EAST LEG		WEST	LEFT	**0**	EAST LEG	
BOUND	THRU	**0**	IN ...	**0**	BOUND	THRU	**0**	IN ...	**0**
	RIGHT	**0**	OUT ...	**0**		RIGHT	**0**	OUT ...	**0**

OPENING YEAR (2013) TRAFFIC CONDITIONS									
MORNING PEAK HOUR RESULTS					EVENING PEAK HOUR RESULTS				
APPROACH	TURNING MOVEMENT	BASE YEAR COUNT	OPENING YEAR FORECAST	PEAK - DAILY RELATIONSHIP	APPROACH	TURNING MOVEMENT	BASE YEAR COUNT	OPENING YEAR FORECAST	PEAK - DAILY RELATIONSHIP
NORTH	LEFT	**47**	**49**	NORTH LEG	NORTH	LEFT	**19**	**56**	NORTH LEG
BOUND	THRU	**757**	**774**	RATIO **10.4%**	BOUND	THRU	**237**	**247**	RATIO **9.0%**
	RIGHT	**0**	**0**	ADT 9,400		RIGHT	**0**	**0**	ADT 9,400
SOUTH	LEFT	**0**	**0**	SOUTH LEG	SOUTH	LEFT	**0**	**0**	SOUTH LEG
BOUND	THRU	**160**	**165**	RATIO **10.1%**	BOUND	THRU	**570**	**574**	RATIO **8.8%**
	RIGHT	**6**	**11**	ADT 10,300		RIGHT	**5**	**24**	ADT 10,300
EAST	LEFT	**3**	**26**	EAST LEG	EAST	LEFT	**1**	**3**	EAST LEG
BOUND	THRU	**0**	**0**	RATIO **#DIV/0!**	BOUND	THRU	**0**	**0**	RATIO **#DIV/0!**
	RIGHT	**14**	**51**	ADT 0		RIGHT	**13**	**26**	ADT 0
WEST	LEFT	**0**	**0**	WEST LEG	WEST	LEFT	**0**	**0**	WEST LEG
BOUND	THRU	**0**	**0**	RATIO **11.4%**	BOUND	THRU	**0**	**0**	RATIO **9.1%**
	RIGHT	**0**	**0**	ADT 1,200		RIGHT	**0**	**0**	ADT 1,200

CAMPUS STREET (NS) / BARTON ROAD (EW)

MORNING PEAK HOUR

EXISTING PEAK HOUR TURNING MOVEMENT VOLUMES (AUTOS):

2011

			60	19	114
			<	v	>
178	^				^ 420
970	>				< 463
22	v				v 9
			<	^	>
			99	125	9

EXISTING PEAK HOUR COUNT YEAR (AUTOS):

2011

			193	723	
			v	^	
622	<	IN =	2488	<	892
1170	>	OUT =	2488	>	1093
			v	^	
			50	233	

EXISTING PEAK HOUR TURNING MOVEMENT VOLUMES (TRUCKS IN PCE'S):

			2	0	12
			<	v	>
5	^				^ 8
30	>				< 16
0	v				v 2
			<	^	>
			2	0	0

PCE FACTORS BY AXLE:
2: 1.5 3: 2.0 4+: 3.0

TOTAL EXISTING PEAK HOUR TURNING MOVEMENT VOLUMES (PCES):

2011

			62	19	126
			<	v	>
183	^				^ 428
1000	>				< 479
22	v				v 11
			<	^	>
			101	125	9

EXISTING PEAK PERIOD MODEL YEAR (AUTO):

2000

			60	82	
			v	^	
1895	<	IN =	3156	<	1977
1119	>	OUT =	3156	>	1179
			v	^	
			0	0	

EXISTING PEAK PERIOD MODEL YEAR (TRUCKS IN PCE'S):

1994

			0	0	
			v	^	
107	<	IN =	220	<	107
113	>	OUT =	220	>	113
			v	^	
			0	0	

EXISTING PEAK HOUR MODEL YEAR (PCE'S):

PHF FOR CARS: 0.38
PHF FOR TRUCKS: 0.333

			23	31	
			v	^	
756	<	IN =	1273	<	787
463	>	OUT =	1273	>	486
			v	^	
			0	0	

FUTURE PEAK PERIOD MODEL YEAR (AUTO):

2030

			1036	70	
			v	^	
2511	<	IN =	7317	<	1823
3700	>	OUT =	7317	>	3552
			v	^	
			1184	758	

FUTURE PEAK PERIOD MODEL YEAR (TRUCKS IN PCE'S):

2020

			27	67	
			v	^	
96	<	IN =	265	<	159
79	>	OUT =	269	>	106
			v	^	
			0	0	

FUTURE PEAK HOUR MODEL YEAR (PCE'S):

PHF FOR CARS: 0.38
PHF FOR TRUCKS: 0.333

			403	49	
			v	^	
986	<	IN =	2869	<	746
1432	>	OUT =	2870	>	1385
			v	^	
			450	288	

RAW GROWTH (PCE'S): 2000 TO 2030
CONVERSION OF TRUCKS TO: 2025
FACTOR = 1.25

			382	23	
			v	^	
230	<			<	-37
967	>			>	899
			v	^	
			450	288	

ADJUSTED GROWTH (PCE'S): 2000 TO 2030
10 MINIMUM GROWTH %

			380	70	
			v	^	
230	<	IN =	1730	<	90
970	>	OUT =	1650	>	900
			v	^	
			450	290	

OPENING YEAR GROWTH: 2011 TO 2013
2 YEARS

			30	0	
			v	^	
20	<			<	10
60	>			>	60
			v	^	
			30	20	

INITIAL OPENING YEAR VOLUMES:

2013

			240	740	
			v	^	
660	<	IN =	2700	<	930
1270	>	OUT =	2680	>	1200
			v	^	
			80	260	

BALANCED OPENING YEAR VOLUMES:

2013

			240	750	
			v	^	
660	<	IN =	2700	<	930
1270	>	OUT =	2700	>	1210
			v	^	
			80	260	

EVENING PEAK HOUR

EXISTING PEAK HOUR TURNING MOVEMENT VOLUMES (AUTOS):

2011

			118	66	346
			<	v	>
49	^				^ 138
585	>				< 1053
43	v				v 23
			<	^	>
			59	22	11

EXISTING PEAK HOUR COUNT YEAR (AUTOS):

2011

			530	209	
			v	^	
1230	<	IN =	2513	<	1214
677	>	OUT =	2513	>	942
			v	^	
			132	92	

EXISTING PEAK HOUR TURNING MOVEMENT VOLUMES (TRUCKS IN PCE'S):

			0	0	9
			<	v	>
6	^				^ 6
11	>				< 11
0	v				v 0
			<	^	>
			0	0	0

PCE FACTORS BY AXLE:
2: 1.5 3. 2 4+: 3.0

TOTAL EXISTING PEAK HOUR TURNING MOVEMENT VOLUMES (PCES):

2011

			118	66	355
			<	v	>
55	^				^ 144
596	>				< 1064
43	v				v 23
			<	^	>
			59	22	11

EXISTING PEAK PERIOD MODEL YEAR (AUTO):

2000

			211	140	
			v	^	
2180	<	IN =	5744	<	2227
3306	>	OUT =	5744	>	3424
			v	^	
			0	0	

EXISTING PEAK PERIOD MODEL YEAR (TRUCKS IN PCE'S):

1994

			0	0	
			v	^	
47	<	IN =	184	<	47
137	>	OUT =	184	>	137
			v	^	
			0	0	

EXISTING PEAK HOUR MODEL YEAR (PCE'S):

PHF FOR CARS: 0.28
PHF FOR TRUCKS: 0.25

			59	39	
			v	^	
622	<	IN =	1654	<	635
960	>	OUT =	1654	>	993
			v	^	
			0	0	

FUTURE PEAK PERIOD MODEL YEAR (AUTO):

2030

			743	1815	
			v	^	
4549	<	IN =	11065	<	4909
3958	>	OUT =	11064	>	3271
			v	^	
			1429	1455	

FUTURE PEAK PERIOD MODEL YEAR (TRUCKS IN PCE'S):

2020

			48	56	
			v	^	
251	<	IN =	621	<	306
267	>	OUT =	623	>	316
			v	^	
			0	0	

FUTURE PEAK HOUR MODEL YEAR (PCE'S):

PHF FOR CARS: 0.28
PHF FOR TRUCKS: 0.25

			220	522	
			v	^	
1336	<	IN =	3253	<	1451
1175	>	OUT =	3254	>	995
			v	^	
			400	407	

RAW GROWTH (PCE'S): 2000 TO 2030
CONVERSION OF TRUCKS TO: 2025
FACTOR = 1.25

			164	487	
			v	^	
727	<			<	832
223	>			>	13
			v	^	
			400	407	

ADJUSTED GROWTH (PCE'S): 2000 TO 2030
10 MINIMUM GROWTH %

			160	490	
			v	^	
730	<	IN =	1620	<	830
220	>	OUT =	1720	>	100
			v	^	
			400	410	

OPENING YEAR GROWTH: 2011 TO 2013
2 YEARS

			10	30	
			v	^	
50	<			<	60
10	>			>	10
			v	^	
			30	30	

INITIAL OPENING YEAR VOLUMES:

2013

			550	250	
			v	^	
1290	<	IN =	2660	<	1290
700	>	OUT =	2670	>	970
			v	^	
			160	120	

BALANCED OPENING YEAR VOLUMES:

2013

			550	250	
			v	^	
1290	<	IN =	2660	<	1290
700	>	OUT =	2670	>	970
			v	^	
			160	120	

CAMPUS STREET (NS) / BARTON ROAD (EW)

FUTURE DIRECTIONAL TURN VOLUMES FROM FUTURE DIRECTIONAL LINK VOLUMES

NCHRP 255

OPENING YEAR (2013) TRAFFIC CONDITIONS									
MORNING PEAK HOUR INPUT DATA					EVENING PEAK HOUR INPUT DATA				
APPROACH	TURNING MOVEMENT	BASE YEAR COUNT	APPROACH	OPENING YEAR TOTAL	APPROACH	TURNING MOVEMENT	BASE YEAR COUNT	APPROACH	OPENING YEAR TOTAL
NORTH	LEFT	**101**	SOUTH LEG		NORTH	LEFT	**59**	SOUTH LEG	
BOUND	THRU	**125**	IN ...	**260**	BOUND	THRU	**22**	IN ...	**120**
	RIGHT	**9**	OUT ...	**80**		RIGHT	**11**	OUT ...	**160**
SOUTH	LEFT	**126**	NORTH LEG		SOUTH	LEFT	**355**	NORTH LEG	
BOUND	THRU	**19**	IN ...	**240**	BOUND	THRU	**66**	IN ...	**550**
	RIGHT	**62**	OUT ...	**750**		RIGHT	**118**	OUT ...	**250**
EAST	LEFT	**183**	WEST LEG		EAST	LEFT	**55**	WEST LEG	
BOUND	THRU	**1,000**	IN ...	**1,270**	BOUND	THRU	**596**	IN ...	**700**
	RIGHT	**22**	OUT ...	**660**		RIGHT	**43**	OUT ...	**1,290**
WEST	LEFT	**11**	EAST LEG		WEST	LEFT	**23**	EAST LEG	
BOUND	THRU	**479**	IN ...	**930**	BOUND	THRU	**1,064**	IN ...	**1,290**
	RIGHT	**428**	OUT ...	**1,210**		RIGHT	**144**	OUT ...	**970**

OPENING YEAR (2013) TRAFFIC CONDITIONS									
MORNING PEAK HOUR RESULTS					EVENING PEAK HOUR RESULTS				
APPROACH	TURNING MOVEMENT	BASE YEAR COUNT	OPENING YEAR FORECAST	PEAK - DAILY RELATIONSHIP	APPROACH	TURNING MOVEMENT	BASE YEAR COUNT	OPENING YEAR FORECAST	PEAK - DAILY RELATIONSHIP
NORTH	LEFT	**101**	**111**	NORTH LEG	NORTH	LEFT	**59**	**75**	NORTH LEG
BOUND	THRU	**125**	**138**	RATIO **9.7%**	BOUND	THRU	**22**	**31**	RATIO **7.9%**
	RIGHT	**9**	**11**	ADT 10,300		RIGHT	**11**	**15**	ADT 10,300
SOUTH	LEFT	**126**	**143**	SOUTH LEG	SOUTH	LEFT	**355**	**360**	SOUTH LEG
BOUND	THRU	**19**	**31**	RATIO **13.1%**	BOUND	THRU	**66**	**79**	RATIO **10.8%**
	RIGHT	**62**	**66**	ADT 2,600		RIGHT	**118**	**122**	ADT 2,600
EAST	LEFT	**183**	**189**	EAST LEG	EAST	LEFT	**55**	**57**	EAST LEG
BOUND	THRU	**1,000**	**1,056**	RATIO **8.1%**	BOUND	THRU	**596**	**614**	RATIO **8.7%**
	RIGHT	**22**	**33**	ADT 26,300		RIGHT	**43**	**51**	ADT 26,300
WEST	LEFT	**11**	**17**	WEST LEG	WEST	LEFT	**23**	**30**	WEST LEG
BOUND	THRU	**479**	**482**	RATIO **8.4%**	BOUND	THRU	**1,064**	**1,101**	RATIO **8.7%**
	RIGHT	**428**	**430**	ADT 23,100		RIGHT	**144**	**162**	ADT 23,100

PARKLAND STREET (NS) / STEWART STREET (EW)

MORNING PEAK HOUR

EXISTING PEAK HOUR TURNING MOVEMENT VOLUMES (AUTOS):
2011

```
                 12    0    5
                 <    v    >
      32 ^                    ^    7
     222 >                    <  184
       0 v                    v    0
                 <    ^    >
                  0    0    0
```

EXISTING PEAK HOUR COUNT YEAR (AUTOS):
2011

```
                      17   39
                      v    ^
     196 <     IN =   462 <  191
     254 >    OUT =   462 >  227
                      v    ^
                       0    0
```

EXISTING PEAK HOUR TURNING MOVEMENT VOLUMES (TRUCKS IN PCE'S):

```
                  3    0    0
                  <    v    >
       0 ^                    ^    3
       8 >                    <   11
       0 v                    v    0
                  <    ^    >
                  0    0    0
```

PCE FACTORS BY AXLE:
2: 1.5 3: 2.0 4+: 3.0

TOTAL EXISTING PEAK HOUR TURNING MOVEMENT VOLUMES (PCES):
2011

```
                 15    0    5
                 <    v    >
      32 ^                    ^   10
     230 >                    <  195
       0 v                    v    0
                 <    ^    >
                  0    0    0
```

EXISTING PEAK PERIOD MODEL YEAR (AUTO):
2000

```
                       0    0
                       v    ^
     360 <     IN =    655 <  360
     295 >    OUT =    655 >  295
                       v    ^
                       0    0
```

EXISTING PEAK PERIOD MODEL YEAR (TRUCKS IN PCE'S):
1994

```
                       0    0
                       v    ^
      38 <     IN =     68 <   38
      30 >    OUT =     68 >   30
                       v    ^
                       0    0
```

EXISTING PEAK HOUR MODEL YEAR (PCE'S):
PHF FOR CARS: 0.38
PHF FOR TRUCKS: 0.333

```
                       0    0
                       v    ^
     149 <     IN =    272 <  149
     122 >    OUT =    272 >  122
                       v    ^
                       0    0
```

FUTURE PEAK PERIOD MODEL YEAR (AUTO):
2030

```
                       0    0
                       v    ^
     374 <     IN =   1654 <  374
    1280 >    OUT =   1654 > 1280
                       v    ^
                       0    0
```

FUTURE PEAK PERIOD MODEL YEAR (TRUCKS IN PCE'S):
2020

```
                       0    0
                       v    ^
      99 <     IN =    158 <   99
      59 >    OUT =    158 >   59
                       v    ^
                       0    0
```

FUTURE PEAK HOUR MODEL YEAR (PCE'S):
PHF FOR CARS: 0.38
PHF FOR TRUCKS: 0.333

```
                       0    0
                       v    ^
     175 <     IN =    681 <  175
     506 >    OUT =    681 >  506
                       v    ^
                       0    0
```

RAW GROWTH (PCE'S): 2000 TO 2030
CONVERSION OF TRUCKS TO: 2025
FACTOR = 1.25

```
                       0    0
                       v    ^
      31 <                <   31
     386 >                >  386
                       v    ^
                       0    0
```

ADJUSTED GROWTH (PCE'S): 2000 TO 2030
10 MINIMUM GROWTH %

```
                       0    0
                       v    ^
      30 <     IN =    420 <   30
     390 >    OUT =    420 >  390
                       v    ^
                       0    0
```

OPENING YEAR GROWTH: 2011 TO 2013
2 YEARS

```
                       0    0
                       v    ^
       0 <                <    0
      30 >                >   30
                       v    ^
                       0    0
```

INITIAL OPENING YEAR VOLUMES:
2013

```
                      20   40
                      v    ^
     210 <     IN =   520 <  210
     290 >    OUT =   520 >  270
                      v    ^
                       0    0
```

BALANCED OPENING YEAR VOLUMES:
2013

```
                      20   40
                      v    ^
     210 <     IN =   520 <  210
     290 >    OUT =   520 >  270
                      v    ^
                       0    0
```

EVENING PEAK HOUR

EXISTING PEAK HOUR TURNING MOVEMENT VOLUMES (AUTOS):
2011

```
                 16    0   10
                 <    v    >
       9 ^                    ^    9
     239 >                    <  264
       0 v                    v    0
                 <    ^    >
                  0    0    0
```

EXISTING PEAK HOUR COUNT YEAR (AUTOS):
2011

```
                      26   18
                      v    ^
     280 <     IN =   547 <  273
     248 >    OUT =   547 >  249
                      v    ^
                       0    0
```

EXISTING PEAK HOUR TURNING MOVEMENT VOLUMES (TRUCKS IN PCE'S):

```
                  0    0    2
                  <    v    >
       3 ^                    ^    0
       6 >                    <    2
       0 v                    v    0
                  <    ^    >
                  0    0    0
```

PCE FACTORS BY AXLE:
2: 1.5 3: 2 4+: 3.0

TOTAL EXISTING PEAK HOUR TURNING MOVEMENT VOLUMES (PCES):
2011

```
                 16    0   12
                 <    v    >
      12 ^                    ^    9
     245 >                    <  266
       0 v                    v    0
                 <    ^    >
                  0    0    0
```

EXISTING PEAK PERIOD MODEL YEAR (AUTO):
2000

```
                       0    0
                       v    ^
     452 <     IN =   1030 <  452
     578 >    OUT =   1030 >  578
                       v    ^
                       0    0
```

EXISTING PEAK PERIOD MODEL YEAR (TRUCKS IN PCE'S):
1994

```
                       0    0
                       v    ^
      41 <     IN =     70 <   41
      29 >    OUT =     70 >   29
                       v    ^
                       0    0
```

EXISTING PEAK HOUR MODEL YEAR (PCE'S):
PHF FOR CARS: 0.28
PHF FOR TRUCKS: 0.25

```
                       0    0
                       v    ^
     137 <     IN =    306 <  137
     169 >    OUT =    306 >  169
                       v    ^
                       0    0
```

FUTURE PEAK PERIOD MODEL YEAR (AUTO):
2030

```
                       0    0
                       v    ^
    1489 <     IN =   2268 < 1489
     779 >    OUT =   2268 >  779
                       v    ^
                       0    0
```

FUTURE PEAK PERIOD MODEL YEAR (TRUCKS IN PCE'S):
2020

```
                       0    0
                       v    ^
      95 <     IN =    202 <   95
     107 >    OUT =    202 >  107
                       v    ^
                       0    0
```

FUTURE PEAK HOUR MODEL YEAR (PCE'S):
PHF FOR CARS: 0.28
PHF FOR TRUCKS: 0.25

```
                       0    0
                       v    ^
     441 <     IN =    686 <  441
     245 >    OUT =    686 >  245
                       v    ^
                       0    0
```

RAW GROWTH (PCE'S): 2000 TO 2030
CONVERSION OF TRUCKS TO: 2025
FACTOR = 1.25

```
                       0    0
                       v    ^
     307 <                <  307
      81 >                >   81
                       v    ^
                       0    0
```

ADJUSTED GROWTH (PCE'S): 2000 TO 2030
10 MINIMUM GROWTH %

```
                       0    0
                       v    ^
     310 <     IN =    390 <  310
      80 >    OUT =    390 >   80
                       v    ^
                       0    0
```

OPENING YEAR GROWTH: 2011 TO 2013
2 YEARS

```
                       0    0
                       v    ^
      20 <                <   20
      10 >                >   10
                       v    ^
                       0    0
```

INITIAL OPENING YEAR VOLUMES:
2013

```
                      30   20
                      v    ^
     300 <     IN =   600 <  300
     270 >    OUT =   590 >  270
                      v    ^
                       0    0
```

BALANCED OPENING YEAR VOLUMES:
2013

```
                      30   20
                      v    ^
     310 <     IN =   600 <  300
     270 >    OUT =   600 >  270
                      v    ^
                       0    0
```

PARKLAND STREET (NS) / STEWART STREET (EW)

FUTURE DIRECTIONAL TURN VOLUMES FROM FUTURE DIRECTIONAL LINK VOLUMES

NCHRP 255

OPENING YEAR (2013) TRAFFIC CONDITIONS									
MORNING PEAK HOUR INPUT DATA					EVENING PEAK HOUR INPUT DATA				
APPROACH	TURNING MOVEMENT	BASE YEAR COUNT	APPROACH	OPENING YEAR TOTAL	APPROACH	TURNING MOVEMENT	BASE YEAR COUNT	APPROACH	OPENING YEAR TOTAL
NORTH	LEFT	**0**	SOUTH LEG		NORTH	LEFT	**0**	SOUTH LEG	
BOUND	THRU	**0**	IN ...	**0**	BOUND	THRU	**0**	IN ...	**0**
	RIGHT	**0**	OUT ...	**0**		RIGHT	**0**	OUT ...	**0**
SOUTH	LEFT	**5**	NORTH LEG		SOUTH	LEFT	**12**	NORTH LEG	
BOUND	THRU	**0**	IN ...	**20**	BOUND	THRU	**0**	IN ...	**30**
	RIGHT	**15**	OUT ...	**40**		RIGHT	**16**	OUT ...	**20**
EAST	LEFT	**32**	WEST LEG		EAST	LEFT	**12**	WEST LEG	
BOUND	THRU	**230**	IN ...	**290**	BOUND	THRU	**245**	IN ...	**270**
	RIGHT	**0**	OUT ...	**210**		RIGHT	**0**	OUT ...	**310**
WEST	LEFT	**0**	EAST LEG		WEST	LEFT	**0**	EAST LEG	
BOUND	THRU	**195**	IN ...	**210**	BOUND	THRU	**266**	IN ...	**300**
	RIGHT	**10**	OUT ...	**270**		RIGHT	**9**	OUT ...	**270**

OPENING YEAR (2013) TRAFFIC CONDITIONS									
MORNING PEAK HOUR RESULTS					EVENING PEAK HOUR RESULTS				
APPROACH	TURNING MOVEMENT	BASE YEAR COUNT	OPENING YEAR FORECAST	PEAK - DAILY RELATIONSHIP	APPROACH	TURNING MOVEMENT	BASE YEAR COUNT	OPENING YEAR FORECAST	PEAK - DAILY RELATIONSHIP
NORTH	LEFT	**0**	**0**	NORTH LEG	NORTH	LEFT	**0**	**0**	NORTH LEG
BOUND	THRU	**0**	**0**	RATIO **11.0%**	BOUND	THRU	**0**	**0**	RATIO **8.8%**
	RIGHT	**0**	**0**	ADT 600		RIGHT	**0**	**0**	ADT 600
SOUTH	LEFT	**5**	**6**	SOUTH LEG	SOUTH	LEFT	**12**	**12**	SOUTH LEG
BOUND	THRU	**0**	**0**	RATIO **#DIV/0!**	BOUND	THRU	**0**	**0**	RATIO **#DIV/0!**
	RIGHT	**15**	**16**	ADT 0		RIGHT	**16**	**18**	ADT 0
EAST	LEFT	**32**	**33**	EAST LEG	EAST	LEFT	**12**	**13**	EAST LEG
BOUND	THRU	**230**	**264**	RATIO **7.5%**	BOUND	THRU	**245**	**258**	RATIO **8.9%**
	RIGHT	**0**	**0**	ADT 6,400		RIGHT	**0**	**0**	ADT 6,400
WEST	LEFT	**0**	**0**	WEST LEG	WEST	LEFT	**0**	**0**	WEST LEG
BOUND	THRU	**195**	**196**	RATIO **6.4%**	BOUND	THRU	**266**	**292**	RATIO **7.3%**
	RIGHT	**10**	**11**	ADT 8,000		RIGHT	**9**	**10**	ADT 8,000

ANDERSON STREET (NS) / STEWART STREET (EW)

MORNING PEAK HOUR

EXISTING PEAK HOUR TURNING MOVEMENT VOLUMES (AUTOS):
2011

```
                518   623   232
                 <     v     >
188 ^                        ^   141
 64 >                        <    63
 39 v                        v    16
                 <     ^     >
                 47   268    27
```

EXISTING PEAK HOUR COUNT YEAR (AUTOS):
2011

```
                      1373   597
                       v     ^
628 <        IN =     2226 <   220
291 >       OUT =     2226 >   323
                       v     ^
                       678   342
```

EXISTING PEAK HOUR TURNING MOVEMENT VOLUMES (TRUCKS IN PCE'S):

```
                 8     2     2
                 <     v     >
  8 ^                        ^     5
  2 >                        <     4
  0 v                        v     6
                 <     ^     >
                 0     9     3
```

PCE FACTORS BY AXLE:
2: 1.5 3: 2.0 4+: 3.0

TOTAL EXISTING PEAK HOUR TURNING MOVEMENT VOLUMES (PCES):
2011

```
                526   625   234
                 <     v     >
196 ^                        ^   146
 66 >                        <    67
 39 v                        v    22
                 <     ^     >
                 47   277    30
```

EXISTING PEAK PERIOD MODEL YEAR (AUTO):
2000

```
                      1759   1519
                       v     ^
840 <        IN =     3319 <   360
420 >       OUT =     3319 >   295
                       v     ^
                       665   780
```

EXISTING PEAK PERIOD MODEL YEAR (TRUCKS IN PCE'S):
1994

```
                        55   103
                        v     ^
 10 <        IN =       161 <    38
 12 >       OUT =       162 >    30
                        v     ^
                        19    56
```

EXISTING PEAK HOUR MODEL YEAR (PCE'S):
PHF FOR CARS: 0.38
PHF FOR TRUCKS: 0.333

```
                       687   612
                        v     ^
323 <        IN =      1315 <   149
164 >       OUT =      1315 >   122
                        v     ^
                       259   315
```

FUTURE PEAK PERIOD MODEL YEAR (AUTO):
2030

```
                      3973   1977
                       v     ^
226 <        IN =     6907 <   374
899 >       OUT =     6908 >  1770
                       v     ^
                      2935  1661
```

FUTURE PEAK PERIOD MODEL YEAR (TRUCKS IN PCE'S):
2020

```
                       143   289
                        v     ^
 10 <        IN =       435 <    99
 12 >       OUT =       432 >    59
                        v     ^
                        74   181
```

FUTURE PEAK HOUR MODEL YEAR (PCE'S):
PHF FOR CARS: 0.38
PHF FOR TRUCKS: 0.333

```
                      1557   847
                       v     ^
 89 <        IN =     2770 <   175
346 >       OUT =     2769 >   692
                       v     ^
                      1140   691
```

RAW GROWTH (PCE'S): 2000 TO 2030
CONVERSION OF TRUCKS TO: 2025
FACTOR = 1.25

```
                       878   251
                        v     ^
-233 <                       <    31
 182 >                       >   573
                        v     ^
                       885   387
```

ADJUSTED GROWTH (PCE'S): 2000 TO 2030
10 MINIMUM GROWTH %

```
                       880   250
                        v     ^
 60 <        IN =     1480 <    30
180 >       OUT =     1770 >   570
                        v     ^
                       890   390
```

OPENING YEAR GROWTH: 2011 TO 2013
2 YEARS

```
                        60    20
                        v     ^
  0 <                        <     0
 10 >                        >    40
                        v     ^
                        60    30
```

INITIAL OPENING YEAR VOLUMES:
2013

```
                      1450   640
                       v     ^
640 <        IN =     2380 <   240
310 >       OUT =     2400 >   370
                       v     ^
                       750   380
```

BALANCED OPENING YEAR VOLUMES:
2013

```
                      1460   640
                       v     ^
640 <        IN =     2390 <   240
310 >       OUT =     2400 >   370
                       v     ^
                       750   380
```

EVENING PEAK HOUR

EXISTING PEAK HOUR TURNING MOVEMENT VOLUMES (AUTOS):
2011

```
                222   376   142
                 <     v     >
200 ^                        ^   289
116 >                        <    82
 58 v                        v    18
                 <     ^     >
                 32   517    15
```

EXISTING PEAK HOUR COUNT YEAR (AUTOS):
2011

```
                       740   1006
                        v     ^
336 <        IN =      2067 <   389
374 >       OUT =      2067 >   273
                        v     ^
                       452   564
```

EXISTING PEAK HOUR TURNING MOVEMENT VOLUMES (TRUCKS IN PCE'S):

```
                11     0     0
                 <     v     >
  3 ^                        ^     2
  3 >                        <     0
  0 v                        v     2
                 <     ^     >
                 0     5     0
```

PCE FACTORS BY AXLE:
2: 1.5 3: 2 4+: 3.0

TOTAL EXISTING PEAK HOUR TURNING MOVEMENT VOLUMES (PCES):
2011

```
                233   376   142
                 <     v     >
203 ^                        ^   291
119 >                        <    82
 58 v                        v    20
                 <     ^     >
                 32   522    15
```

EXISTING PEAK PERIOD MODEL YEAR (AUTO):
2000

```
                       2510   2704
                        v     ^
1066 <       IN =      5306 <   452
972 >       OUT =      5305 >   578
                        v     ^
                       957  1372
```

EXISTING PEAK PERIOD MODEL YEAR (TRUCKS IN PCE'S):
1994

```
                        74   127
                        v     ^
 11 <        IN =       205 <    41
 13 >       OUT =       202 >    29
                        v     ^
                        35    77
```

EXISTING PEAK HOUR MODEL YEAR (PCE'S):
PHF FOR CARS: 0.28
PHF FOR TRUCKS: 0.25

```
                       721   789
                        v     ^
301 <        IN =      1537 <   137
275 >       OUT =      1536 >   169
                        v     ^
                       277   403
```

FUTURE PEAK PERIOD MODEL YEAR (AUTO):
2030

```
                       3513   4994
                        v     ^
1045 <       IN =      9772 <  2111
370 >       OUT =      9772 >   844
                        v     ^
                      2889  3778
```

FUTURE PEAK PERIOD MODEL YEAR (TRUCKS IN PCE'S):
2020

```
                       207   202
                        v     ^
 28 <        IN =       419 <    95
 30 >       OUT =       423 >   107
                        v     ^
                        86    87
```

FUTURE PEAK HOUR MODEL YEAR (PCE'S):
PHF FOR CARS: 0.28
PHF FOR TRUCKS: 0.25

```
                      1035   1449
                       v     ^
300 <        IN =     2841 <   615
111 >       OUT =     2842 >   263
                       v     ^
                      830  1080
```

RAW GROWTH (PCE'S): 2000 TO 2030
CONVERSION OF TRUCKS TO: 2025
FACTOR = 1.25

```
                       322   665
                        v     ^
 -1 <                        <   481
-163 >                       >    99
                        v     ^
                       557   677
```

ADJUSTED GROWTH (PCE'S): 2000 TO 2030
10 MINIMUM GROWTH %

```
                       320   660
                        v     ^
 30 <        IN =     1520 <   480
 40 >       OUT =     1350 >   100
                        v     ^
                       560   680
```

OPENING YEAR GROWTH: 2011 TO 2013
2 YEARS

```
                        20    40
                        v     ^
  0 <                        <    30
  0 >                        >    10
                        v     ^
                        40    50
```

INITIAL OPENING YEAR VOLUMES:
2013

```
                       770   1060
                        v     ^
350 <        IN =      2190 <   420
380 >       OUT =      2190 >   290
                        v     ^
                       490   620
```

BALANCED OPENING YEAR VOLUMES:
2013

```
                       770   1060
                        v     ^
350 <        IN =      2190 <   420
380 >       OUT =      2190 >   290
                        v     ^
                       490   620
```

ANDERSON STREET (NS) / STEWART STREET (EW)

FUTURE DIRECTIONAL TURN VOLUMES FROM FUTURE DIRECTIONAL LINK VOLUMES

NCHRP 255

OPENING YEAR (2013) TRAFFIC CONDITIONS									
MORNING PEAK HOUR INPUT DATA					EVENING PEAK HOUR INPUT DATA				
APPROACH	TURNING MOVEMENT	BASE YEAR COUNT	APPROACH	OPENING YEAR TOTAL	APPROACH	TURNING MOVEMENT	BASE YEAR COUNT	APPROACH	OPENING YEAR TOTAL
NORTH	LEFT	**47**	SOUTH LEG		NORTH	LEFT	**32**	SOUTH LEG	
BOUND	THRU	**277**	IN ...	**380**	BOUND	THRU	**522**	IN ...	**620**
	RIGHT	**30**	OUT ...	**750**		RIGHT	**15**	OUT ...	**490**
SOUTH	LEFT	**234**	NORTH LEG		SOUTH	LEFT	**142**	NORTH LEG	
BOUND	THRU	**625**	IN ...	**1,460**	BOUND	THRU	**376**	IN ...	**770**
	RIGHT	**526**	OUT ...	**640**		RIGHT	**233**	OUT ...	**1,060**
EAST	LEFT	**196**	WEST LEG		EAST	LEFT	**203**	WEST LEG	
BOUND	THRU	**66**	IN ...	**310**	BOUND	THRU	**119**	IN ...	**380**
	RIGHT	**39**	OUT ...	**640**		RIGHT	**58**	OUT ...	**350**
WEST	LEFT	**22**	EAST LEG		WEST	LEFT	**20**	EAST LEG	
BOUND	THRU	**67**	IN ...	**240**	BOUND	THRU	**82**	IN ...	**420**
	RIGHT	**146**	OUT ...	**370**		RIGHT	**291**	OUT ...	**290**

OPENING YEAR (2013) TRAFFIC CONDITIONS									
MORNING PEAK HOUR RESULTS					EVENING PEAK HOUR RESULTS				
APPROACH	TURNING MOVEMENT	BASE YEAR COUNT	OPENING YEAR FORECAST	PEAK - DAILY RELATIONSHIP	APPROACH	TURNING MOVEMENT	BASE YEAR COUNT	OPENING YEAR FORECAST	PEAK - DAILY RELATIONSHIP
NORTH	LEFT	**47**	**50**	NORTH LEG	NORTH	LEFT	**32**	**36**	NORTH LEG
BOUND	THRU	**277**	**296**	RATIO **10.1%**	BOUND	THRU	**522**	**565**	RATIO **8.8%**
	RIGHT	**30**	**36**	ADT 21,200		RIGHT	**15**	**18**	ADT 21,200
SOUTH	LEFT	**234**	**261**	SOUTH LEG	SOUTH	LEFT	**142**	**146**	SOUTH LEG
BOUND	THRU	**625**	**683**	RATIO **8.6%**	BOUND	THRU	**376**	**402**	RATIO **8.4%**
	RIGHT	**526**	**542**	ADT 13,200		RIGHT	**233**	**240**	ADT 13,200
EAST	LEFT	**196**	**202**	EAST LEG	EAST	LEFT	**203**	**210**	EAST LEG
BOUND	THRU	**66**	**73**	RATIO **7.5%**	BOUND	THRU	**119**	**126**	RATIO **8.8%**
	RIGHT	**39**	**42**	ADT 8,100		RIGHT	**58**	**64**	ADT 8,100
WEST	LEFT	**22**	**24**	WEST LEG	WEST	LEFT	**20**	**25**	WEST LEG
BOUND	THRU	**67**	**68**	RATIO **11.4%**	BOUND	THRU	**82**	**90**	RATIO **8.9%**
	RIGHT	**146**	**149**	ADT 8,600		RIGHT	**291**	**305**	ADT 8,600

ANDERSON STREET (NS) / UNIVERSITY AVENUE (EW)

MORNING PEAK HOUR

EXISTING PEAK HOUR TURNING MOVEMENT VOLUMES (AUTOS):

2011

119 570 0
< v >
30 ^ ^ 0
0 > < 0
23 v v 0
< ^ >
62 309 0

EXISTING PEAK HOUR COUNT YEAR (AUTOS):

2011

689 339
v ^
181 < IN = 1113 < 0
53 > OUT = 1113 > 0
v ^
593 371

EXISTING PEAK HOUR TURNING MOVEMENT VOLUMES (TRUCKS IN PCE'S):

3 6 0
< v >
2 ^ ^ 0
0 > < 0
0 v v 0
< ^ >
2 12 0

PCE FACTORS BY AXLE:
2: 1.5 3: 2.0 4+: 3.0

TOTAL EXISTING PEAK HOUR TURNING MOVEMENT VOLUMES (PCES):

2011

122 576 0
< v >
32 ^ ^ 0
0 > < 0
23 v v 0
< ^ >
64 321 0

EXISTING PEAK PERIOD MODEL YEAR (AUTO):

2000

673 838
v ^
0 < IN = 1511 < 0
0 > OUT = 1511 > 0
v ^
673 838

EXISTING PEAK PERIOD MODEL YEAR (TRUCKS IN PCE'S):

1994

19 56
v ^
0 < IN = 75 < 0
0 > OUT = 75 > 0
v ^
19 56

EXISTING PEAK HOUR MODEL YEAR (PCE'S):
PHF FOR CARS: 0.38
PHF FOR TRUCKS: 0.333

262 337
v ^
0 < IN = 599 < 0
0 > OUT = 599 > 0
v ^
262 337

FUTURE PEAK PERIOD MODEL YEAR (AUTO):

2030

2940 1721
v ^
0 < IN = 4661 < 0
0 > OUT = 4661 > 0
v ^
2940 1721

FUTURE PEAK PERIOD MODEL YEAR (TRUCKS IN PCE'S):

2020

74 186
v ^
0 < IN = 260 < 0
0 > OUT = 260 > 0
v ^
74 186

FUTURE PEAK HOUR MODEL YEAR (PCE'S):
PHF FOR CARS: 0.38
PHF FOR TRUCKS: 0.333

1142 716
v ^
0 < IN = 1858 < 0
0 > OUT = 1858 > 0
v ^
1142 716

RAW GROWTH (PCE'S): 2000 TO 2030
CONVERSION OF TRUCKS TO. 2025
FACTOR = 1.25

884 390
v ^
0 < < 0
0 > > 0
v ^
884 390

ADJUSTED GROWTH (PCE'S): 2000 TO 2030
10 MINIMUM GROWTH %

880 390
v ^
20 < IN = 1280 < 0
10 > OUT = 1290 > 0
v ^
880 390

OPENING YEAR GROWTH: 2011 TO 2013
2 YEARS

60 30
v ^
0 < < 0
0 > > 0
v ^
60 30

INITIAL OPENING YEAR VOLUMES:

2013

760 380
v ^
190 < IN = 1240 < 0
60 > OUT = 1230 > 0
v ^
660 420

BALANCED OPENING YEAR VOLUMES:

2013

760 380
v ^
190 < IN = 1240 < 0
60 > OUT = 1240 > 0
v ^
670 420

EVENING PEAK HOUR

EXISTING PEAK HOUR TURNING MOVEMENT VOLUMES (AUTOS):

2011

53 405 0
< v >
56 ^ ^ 0
0 > < 0
30 v v 0
< ^ >
58 555 0

EXISTING PEAK HOUR COUNT YEAR (AUTOS):

2011

458 611
v ^
111 < IN = 1157 < 0
86 > OUT = 1157 > 0
v ^
435 613

EXISTING PEAK HOUR TURNING MOVEMENT VOLUMES (TRUCKS IN PCE'S):

0 0 0
< v >
0 ^ ^ 0
0 > < 0
0 v v 0
< ^ >
0 0 0

PCE FACTORS BY AXLE:
2: 1.5 3: 2 4+: 3.0

TOTAL EXISTING PEAK HOUR TURNING MOVEMENT VOLUMES (PCES):

2011

53 405 0
< v >
56 ^ ^ 0
0 > < 0
30 v v 0
< ^ >
58 555 0

EXISTING PEAK PERIOD MODEL YEAR (AUTO):

2000

1024 1383
v ^
0 < IN = 2407 < 0
0 > OUT = 2407 > 0
v ^
1024 1383

EXISTING PEAK PERIOD MODEL YEAR (TRUCKS IN PCE'S):

1994

35 77
v ^
0 < IN = 112 < 0
0 > OUT = 112 > 0
v ^
35 77

EXISTING PEAK HOUR MODEL YEAR (PCE'S):
PHF FOR CARS: 0.28
PHF FOR TRUCKS: 0.25

295 406
v ^
0 < IN = 702 < 0
0 > OUT = 702 > 0
v ^
295 406

FUTURE PEAK PERIOD MODEL YEAR (AUTO):

2030

3039 3881
v ^
0 < IN = 6920 < 0
0 > OUT = 6920 > 0
v ^
3039 3881

FUTURE PEAK PERIOD MODEL YEAR (TRUCKS IN PCE'S):

2020

88 87
v ^
0 < IN = 175 < 0
0 > OUT = 175 > 0
v ^
88 87

FUTURE PEAK HOUR MODEL YEAR (PCE'S):
PHF FOR CARS: 0.28
PHF FOR TRUCKS: 0.25

873 1108
v ^
0 < IN = 1981 < 0
0 > OUT = 1981 > 0
v ^
873 1108

RAW GROWTH (PCE'S): 2000 TO 2030
CONVERSION OF TRUCKS TO: 2025
FACTOR = 1.25

581 703
v ^
0 < < 0
0 > > 0
v ^
581 703

ADJUSTED GROWTH (PCE'S). 2000 TO 2030
10 MINIMUM GROWTH %

580 700
v ^
10 < IN = 1290 < 0
10 > OUT = 1290 > 0
v ^
580 700

OPENING YEAR GROWTH: 2011 TO 2013
2 YEARS

40 50
v ^
0 < < 0
0 > > 0
v ^
40 50

INITIAL OPENING YEAR VOLUMES:

2013

500 660
v ^
110 < IN = 1250 < 0
90 > OUT = 1250 > 0
v ^
480 660

BALANCED OPENING YEAR VOLUMES:

2013

500 660
v ^
110 < IN = 1250 < 0
90 > OUT = 1250 > 0
v ^
480 660

ANDERSON STREET (NS) / UNIVERSITY AVENUE (EW)

FUTURE DIRECTIONAL TURN VOLUMES FROM FUTURE DIRECTIONAL LINK VOLUMES

NCHRP 255

OPENING YEAR (2013) TRAFFIC CONDITIONS									
MORNING PEAK HOUR INPUT DATA					EVENING PEAK HOUR INPUT DATA				
APPROACH	TURNING MOVEMENT	BASE YEAR COUNT	APPROACH	OPENING YEAR TOTAL	APPROACH	TURNING MOVEMENT	BASE YEAR COUNT	APPROACH	OPENING YEAR TOTAL
NORTH	LEFT	**64**	SOUTH LEG		NORTH	LEFT	**58**	SOUTH LEG	
BOUND	THRU	**321**	IN ...	**420**	BOUND	THRU	**555**	IN ...	**660**
	RIGHT	**0**	OUT ...	**670**		RIGHT	**0**	OUT ...	**480**
SOUTH	LEFT	**0**	NORTH LEG		SOUTH	LEFT	**0**	NORTH LEG	
BOUND	THRU	**576**	IN ...	**760**	BOUND	THRU	**405**	IN ...	**500**
	RIGHT	**122**	OUT ...	**380**		RIGHT	**53**	OUT ...	**660**
EAST	LEFT	**32**	WEST LEG		EAST	LEFT	**56**	WEST LEG	
BOUND	THRU	**0**	IN ...	**60**	BOUND	THRU	**0**	IN ...	**90**
	RIGHT	**23**	OUT ...	**190**		RIGHT	**30**	OUT ...	**110**
WEST	LEFT	**0**	EAST LEG		WEST	LEFT	**0**	EAST LEG	
BOUND	THRU	**0**	IN ...	**0**	BOUND	THRU	**0**	IN ...	**0**
	RIGHT	**0**	OUT ...	**0**		RIGHT	**0**	OUT ...	**0**

OPENING YEAR (2013) TRAFFIC CONDITIONS									
MORNING PEAK HOUR RESULTS					EVENING PEAK HOUR RESULTS				
APPROACH	TURNING MOVEMENT	BASE YEAR COUNT	OPENING YEAR FORECAST	PEAK - DAILY RELATIONSHIP	APPROACH	TURNING MOVEMENT	BASE YEAR COUNT	OPENING YEAR FORECAST	PEAK - DAILY RELATIONSHIP
NORTH	LEFT	**64**	**71**	NORTH LEG	NORTH	LEFT	**58**	**60**	NORTH LEG
BOUND	THRU	**321**	**347**	RATIO **8.7%**	BOUND	THRU	**555**	**602**	RATIO **8.8%**
	RIGHT	**0**	**0**	ADT 13,200		RIGHT	**0**	**0**	ADT 13,200
SOUTH	LEFT	**0**	**0**	SOUTH LEG	SOUTH	LEFT	**0**	**0**	SOUTH LEG
BOUND	THRU	**576**	**643**	RATIO **8.4%**	BOUND	THRU	**405**	**448**	RATIO **8.8%**
	RIGHT	**122**	**126**	ADT 13,000		RIGHT	**53**	**55**	ADT 13,000
EAST	LEFT	**32**	**33**	EAST LEG	EAST	LEFT	**56**	**58**	EAST LEG
BOUND	THRU	**0**	**0**	RATIO **#DIV/0!**	BOUND	THRU	**0**	**0**	RATIO **#DIV/0!**
	RIGHT	**23**	**27**	ADT 0		RIGHT	**30**	**32**	ADT 0
WEST	LEFT	**0**	**0**	WEST LEG	WEST	LEFT	**0**	**0**	WEST LEG
BOUND	THRU	**0**	**0**	RATIO **11.2%**	BOUND	THRU	**0**	**0**	RATIO **8.9%**
	RIGHT	**0**	**0**	ADT 2,300		RIGHT	**0**	**0**	ADT 2,300

ANDERSON STREET (NS) / MOUND STREET (EW)

MORNING PEAK HOUR

EXISTING PEAK HOUR TURNING MOVEMENT VOLUMES (AUTOS):
2011

```
                    10    16    16
                 <     v     >
          27 ^                   ^    7
          93 >                   <   19
         446 v                   v   21
                 <     ^     >
                352    72    63
```

EXISTING PEAK HOUR COUNT YEAR (AUTOS):
2011

```
                          42   106
                          v     ^
         381 <     IN =        1142 <   47
         566 >     OUT =       1142 >  172
                          v     ^
                          483   487
```

EXISTING PEAK HOUR TURNING MOVEMENT VOLUMES (TRUCKS IN PCE'S):

```
                     0     0     0
                 <     v     >
           0 ^                   ^    2
           2 >                   <    0
           0 v                   v    6
                 <     ^     >
          12     0     0
```

PCE FACTORS BY AXLE:
2: 1.5 3: 2.0 4+: 3.0

TOTAL EXISTING PEAK HOUR TURNING MOVEMENT VOLUMES (PCES):
2011

```
                    10    16    16
                 <     v     >
          27 ^                   ^    9
          95 >                   <   19
         446 v                   v   27
                 <     ^     >
                364    72    63
```

EXISTING PEAK PERIOD MODEL YEAR (AUTO):
2000

```
                           0     0
                          v     ^
         838 <     IN =        1567 <  118
         673 >     OUT =       1568 >  117
                          v     ^
                          613   776
```

EXISTING PEAK PERIOD MODEL YEAR (TRUCKS IN PCE'S):
1994

```
                           0     0
                          v     ^
          56 <     IN =         77 <   10
          19 >     OUT =        75 >    9
                          v     ^
                           10    48
```

EXISTING PEAK HOUR MODEL YEAR (PCE'S):
PHF FOR CARS: 0.38
PHF FOR TRUCKS: 0.333

```
                           0     0
                          v     ^
         337 <     IN =        621 <   48
         262 >     OUT =       621 >   47
                          v     ^
                          236   311
```

FUTURE PEAK PERIOD MODEL YEAR (AUTO):
2030

```
                         203     9
                          v     ^
        1721 <     IN =       4873 <    2
        2940 >     OUT =      4873 >  328
                          v     ^
                         2815  1728
```

FUTURE PEAK PERIOD MODEL YEAR (TRUCKS IN PCE'S):
2020

```
                           0     0
                          v     ^
         186 <     IN =        273 <   32
          74 >     OUT =       273 >   36
                          v     ^
                           51   167
```

FUTURE PEAK HOUR MODEL YEAR (PCE'S):
PHF FOR CARS: 0.38
PHF FOR TRUCKS: 0.333

```
                          77     3
                          v     ^
         716 <     IN =       1943 <   11
        1142 >     OUT =      1943 >  137
                          v     ^
                         1087  712
```

RAW GROWTH (PCE'S): 2000 TO 2030
CONVERSION OF TRUCKS TO: 2025
FACTOR = 1.25

```
                          77     3
                          v     ^
         390 <                <  -35
         884 >                >   91
                          v     ^
                          854   411
```

ADJUSTED GROWTH (PCE'S): 2000 TO 2030
10 MINIMUM GROWTH %

```
                          80    10
                          v     ^
         390 <     IN =       1380 <   10
         880 >     OUT =      1340 >   90
                          v     ^
                          850   410
```

OPENING YEAR GROWTH: 2011 TO 2013
2 YEARS

```
                          10     0
                          v     ^
          30 <                <    0
          60 >                >   10
                          v     ^
                           60    30
```

INITIAL OPENING YEAR VOLUMES:
2013

```
                          50   110
                          v     ^
         420 <     IN =       1270 <   60
         630 >     OUT =      1260 >  180
                          v     ^
                          550   530
```

BALANCED OPENING YEAR VOLUMES:
2013

```
                          50   110
                          v     ^
         420 <     IN =       1270 <   60
         630 >     OUT =      1260 >  180
                          v     ^
                          550   530
```

EVENING PEAK HOUR

EXISTING PEAK HOUR TURNING MOVEMENT VOLUMES (AUTOS):
2011

```
                     8    57     8
                 <     v     >
          10 ^                   ^    3
          54 >                   <   74
         380 v                   v   39
                 <     ^     >
                529    32    45
```

EXISTING PEAK HOUR COUNT YEAR (AUTOS):
2011

```
                          73    45
                          v     ^
         611 <     IN =       1239 <  116
         444 >     OUT =      1239 >  107
                          v     ^
                          476   606
```

EXISTING PEAK HOUR TURNING MOVEMENT VOLUMES (TRUCKS IN PCE'S):

```
                     0     0     0
                 <     v     >
           0 ^                   ^    0
           0 >                   <    0
           0 v                   v    6
                 <     ^     >
           0     0     0
```

PCE FACTORS BY AXLE:
2: 1.5 3: 2 4+: 3.0

TOTAL EXISTING PEAK HOUR TURNING MOVEMENT VOLUMES (PCES):
2011

```
                     8    57     8
                 <     v     >
          10 ^                   ^    3
          54 >                   <   74
         380 v                   v   45
                 <     ^     >
                529    32    45
```

EXISTING PEAK PERIOD MODEL YEAR (AUTO):
2000

```
                           0     0
                          v     ^
        1383 <     IN =       2498 <  211
        1024 >     OUT =      2498 >  208
                          v     ^
                          907  1263
```

EXISTING PEAK PERIOD MODEL YEAR (TRUCKS IN PCE'S):
1994

```
                           0     0
                          v     ^
          77 <     IN =        115 <   17
          35 >     OUT =       112 >    7
                          v     ^
                           28    63
```

EXISTING PEAK HOUR MODEL YEAR (PCE'S):
PHF FOR CARS: 0.28
PHF FOR TRUCKS: 0.25

```
                           0     0
                          v     ^
         406 <     IN =        728 <   63
         295 >     OUT =       727 >   60
                          v     ^
                          261   369
```

FUTURE PEAK PERIOD MODEL YEAR (AUTO):
2030

```
                          79   529
                          v     ^
        3881 <     IN =       7528 <  824
        3039 >     OUT =      7528 >    4
                          v     ^
                         3114  3586
```

FUTURE PEAK PERIOD MODEL YEAR (TRUCKS IN PCE'S):
2020

```
                           0     0
                          v     ^
          87 <     IN =        187 <   29
          88 >     OUT =       186 >   18
                          v     ^
                           81    70
```

FUTURE PEAK HOUR MODEL YEAR (PCE'S):
PHF FOR CARS: 0.28
PHF FOR TRUCKS: 0.25

```
                          22   148
                          v     ^
        1108 <     IN =       2155 <  238
         873 >     OUT =      2154 >    6
                          v     ^
                          892  1022
```

RAW GROWTH (PCE'S): 2000 TO 2030
CONVERSION OF TRUCKS TO: 2025
FACTOR = 1.25

```
                          22   148
                          v     ^
         703 <                <  175
         581 >                >  -54
                          v     ^
                          635   653
```

ADJUSTED GROWTH (PCE'S): 2000 TO 2030
10 MINIMUM GROWTH %

```
                          20   150
                          v     ^
         700 <     IN =       1430 <  180
         580 >     OUT =      1490 >   10
                          v     ^
                          630   650
```

OPENING YEAR GROWTH: 2011 TO 2013
2 YEARS

```
                           0    10
                          v     ^
          50 <                <   10
          40 >                >    0
                          v     ^
                           40    40
```

INITIAL OPENING YEAR VOLUMES:
2013

```
                          70    60
                          v     ^
         660 <     IN =       1330 <  130
         480 >     OUT =      1350 >  110
                          v     ^
                          520   650
```

BALANCED OPENING YEAR VOLUMES:
2013

```
                          70    60
                          v     ^
         660 <     IN =       1350 <  130
         490 >     OUT =      1350 >  110
                          v     ^
                          520   660
```

ANDERSON STREET (NS) / MOUND STREET (EW)

FUTURE DIRECTIONAL TURN VOLUMES FROM FUTURE DIRECTIONAL LINK VOLUMES

NCHRP 255

OPENING YEAR (2013) TRAFFIC CONDITIONS									
MORNING PEAK HOUR INPUT DATA					EVENING PEAK HOUR INPUT DATA				
APPROACH	TURNING MOVEMENT	BASE YEAR COUNT	APPROACH	OPENING YEAR TOTAL	APPROACH	TURNING MOVEMENT	BASE YEAR COUNT	APPROACH	OPENING YEAR TOTAL
NORTH	LEFT	**364**	SOUTH LEG		NORTH	LEFT	**529**	SOUTH LEG	
BOUND	THRU	**72**	IN ...	**530**	BOUND	THRU	**32**	IN ...	**660**
	RIGHT	**63**	OUT ...	**550**		RIGHT	**45**	OUT ...	**520**
SOUTH	LEFT	**16**	NORTH LEG		SOUTH	LEFT	**8**	NORTH LEG	
BOUND	THRU	**16**	IN ...	**50**	BOUND	THRU	**57**	IN ...	**70**
	RIGHT	**10**	OUT ...	**110**		RIGHT	**8**	OUT ...	**60**
EAST	LEFT	**27**	WEST LEG		EAST	LEFT	**10**	WEST LEG	
BOUND	THRU	**95**	IN ...	**630**	BOUND	THRU	**54**	IN ...	**490**
	RIGHT	**446**	OUT ...	**420**		RIGHT	**380**	OUT ...	**660**
WEST	LEFT	**27**	EAST LEG		WEST	LEFT	**45**	EAST LEG	
BOUND	THRU	**19**	IN ...	**60**	BOUND	THRU	**74**	IN ...	**130**
	RIGHT	**9**	OUT ...	**180**		RIGHT	**3**	OUT ...	**110**

OPENING YEAR (2013) TRAFFIC CONDITIONS									
MORNING PEAK HOUR RESULTS					EVENING PEAK HOUR RESULTS				
APPROACH	TURNING MOVEMENT	BASE YEAR COUNT	OPENING YEAR FORECAST	PEAK - DAILY RELATIONSHIP	APPROACH	TURNING MOVEMENT	BASE YEAR COUNT	OPENING YEAR FORECAST	PEAK - DAILY RELATIONSHIP
NORTH	LEFT	**364**	**388**	NORTH LEG	NORTH	LEFT	**529**	**573**	NORTH LEG
BOUND	THRU	**72**	**73**	RATIO **10.6%**	BOUND	THRU	**32**	**42**	RATIO **9.1%**
	RIGHT	**63**	**64**	ADT 1,500		RIGHT	**45**	**45**	ADT 1,500
SOUTH	LEFT	**16**	**18**	SOUTH LEG	SOUTH	LEFT	**8**	**9**	SOUTH LEG
BOUND	THRU	**16**	**20**	RATIO **8.0%**	BOUND	THRU	**57**	**59**	RATIO **8.8%**
	RIGHT	**10**	**12**	ADT 13,400		RIGHT	**8**	**9**	ADT 13,400
EAST	LEFT	**27**	**28**	EAST LEG	EAST	LEFT	**10**	**14**	EAST LEG
BOUND	THRU	**95**	**98**	RATIO **9.2%**	BOUND	THRU	**54**	**57**	RATIO **9.3%**
	RIGHT	**446**	**500**	ADT 2,600		RIGHT	**380**	**418**	ADT 2,600
WEST	LEFT	**27**	**30**	WEST LEG	WEST	LEFT	**45**	**47**	WEST LEG
BOUND	THRU	**19**	**20**	RATIO **8.0%**	BOUND	THRU	**74**	**79**	RATIO **8.9%**
	RIGHT	**9**	**9**	ADT 13,000		RIGHT	**3**	**4**	ADT 13,000

ANDERSON STREET (NS) / TAYLOR STREET (EW)

MORNING PEAK HOUR

EXISTING PEAK HOUR TURNING MOVEMENT VOLUMES (AUTOS):
2011
41 465 0
< v >
1 ^ ^ 0
0 > < 0
0 v v 0
< ^ >
91 459 0

EXISTING PEAK HOUR COUNT YEAR (AUTOS):
2011
506 460
v ^
132 < IN = 1057 < 0
1 > OUT = 1057 > 0
v ^
465 550

EXISTING PEAK HOUR TURNING MOVEMENT VOLUMES (TRUCKS IN PCE'S):
0 8 0
< v >
0 ^ ^ 0
0 > < 0
0 v v 0
PCE FACTORS BY AXLE: < ^ >
2: 1.5 3: 2.0 4+: 3.0 0 15 0

TOTAL EXISTING PEAK HOUR TURNING MOVEMENT VOLUMES (PCES):
2011
41 473 0
< v >
1 ^ ^ 0
0 > < 0
0 v v 0
< ^ >
91 474 0

EXISTING PEAK PERIOD MODEL YEAR (AUTO):
2000
613 776
v ^
0 < IN = 1389 < 0
0 > OUT = 1389 > 0
v ^
613 776

EXISTING PEAK PERIOD MODEL YEAR (TRUCKS IN PCE'S):
1994
10 48
v ^
0 < IN = 58 < 0
0 > OUT = 58 > 0
v ^
10 48

EXISTING PEAK HOUR MODEL YEAR (PCE'S):
PHF FOR CARS: 0.38
PHF FOR TRUCKS: 0.333
236 311
v ^
0 < IN = 547 < 0
0 > OUT = 547 > 0
v ^
236 311

FUTURE PEAK PERIOD MODEL YEAR (AUTO):
2030
2815 1728
v ^
0 < IN = 4543 < 0
0 > OUT = 4543 > 0
v ^
2815 1728

FUTURE PEAK PERIOD MODEL YEAR (TRUCKS IN PCE'S):
2020
51 167
v ^
0 < IN = 218 < 0
0 > OUT = 218 > 0
v ^
51 167

FUTURE PEAK HOUR MODEL YEAR (PCE'S):
PHF FOR CARS: 0.38
PHF FOR TRUCKS: 0.333
1087 712
v ^
0 < IN = 1799 < 0
0 > OUT = 1799 > 0
v ^
1087 712

RAW GROWTH (PCE'S): 2000 TO 2030
CONVERSION OF TRUCKS TO: 2025
FACTOR = 1.25
854 411
v ^
0 < < 0
0 > > 0
v ^
854 411

ADJUSTED GROWTH (PCE'S): 2000 TO 2030
10 MINIMUM GROWTH %
850 410
v ^
10 < IN = 1260 < 0
0 > OUT = 1270 > 0
v ^
850 410

OPENING YEAR GROWTH: 2011 TO 2013
2 YEARS
60 30
v ^
0 < < 0
0 > > 0
v ^
60 30

INITIAL OPENING YEAR VOLUMES:
2013
570 510
v ^
130 < IN = 1170 < 0
0 > OUT = 1170 > 0
v ^
530 600

BALANCED OPENING YEAR VOLUMES:
2013
570 510
v ^
130 < IN = 1170 < 0
0 > OUT = 1170 > 0
v ^
530 600

EVENING PEAK HOUR

EXISTING PEAK HOUR TURNING MOVEMENT VOLUMES (AUTOS):
2011
5 461 0
< v >
0 ^ ^ 0
0 > < 0
0 v v 0
< ^ >
15 589 0

EXISTING PEAK HOUR COUNT YEAR (AUTOS):
2011
466 589
v ^
20 < IN = 1070 < 0
0 > OUT = 1070 > 0
v ^
461 604

EXISTING PEAK HOUR TURNING MOVEMENT VOLUMES (TRUCKS IN PCE'S):
0 13 0
< v >
0 ^ ^ 0
0 > < 0
0 v v 0
PCE FACTORS BY AXLE: < ^ >
2: 1.5 3: 2 4+: 3.0 0 6 0

TOTAL EXISTING PEAK HOUR TURNING MOVEMENT VOLUMES (PCES):
2011
5 474 0
< v >
0 ^ ^ 0
0 > < 0
0 v v 0
< ^ >
15 595 0

EXISTING PEAK PERIOD MODEL YEAR (AUTO):
2000
907 1263
v ^
0 < IN = 2170 < 0
0 > OUT = 2170 > 0
v ^
907 1263

EXISTING PEAK PERIOD MODEL YEAR (TRUCKS IN PCE'S):
1994
28 63
v ^
0 < IN = 91 < 0
0 > OUT = 91 > 0
v ^
28 63

EXISTING PEAK HOUR MODEL YEAR (PCE'S):
PHF FOR CARS: 0.28
PHF FOR TRUCKS: 0.25
261 369
v ^
0 < IN = 630 < 0
0 > OUT = 630 > 0
v ^
261 369

FUTURE PEAK PERIOD MODEL YEAR (AUTO):
2030
3114 3586
v ^
0 < IN = 6700 < 0
0 > OUT = 6700 > 0
v ^
3114 3586

FUTURE PEAK PERIOD MODEL YEAR (TRUCKS IN PCE'S):
2020
81 70
v ^
0 < IN = 151 < 0
0 > OUT = 151 > 0
v ^
81 70

FUTURE PEAK HOUR MODEL YEAR (PCE'S):
PHF FOR CARS: 0.28
PHF FOR TRUCKS: 0.25
892 1022
v ^
0 < IN = 1914 < 0
0 > OUT = 1914 > 0
v ^
892 1022

RAW GROWTH (PCE'S): 2000 TO 2030
CONVERSION OF TRUCKS TO: 2025
FACTOR = 1.25
635 653
v ^
0 < < 0
0 > > 0
v ^
635 653

ADJUSTED GROWTH (PCE'S): 2000 TO 2030
10 MINIMUM GROWTH %
630 650
v ^
0 < IN = 1280 < 0
0 > OUT = 1280 > 0
v ^
630 650

OPENING YEAR GROWTH: 2011 TO 2013
2 YEARS
40 40
v ^
0 < < 0
0 > > 0
v ^
40 40

INITIAL OPENING YEAR VOLUMES:
2013
520 640
v ^
20 < IN = 1170 < 0
0 > OUT = 1170 > 0
v ^
510 650

BALANCED OPENING YEAR VOLUMES:
2013
520 640
v ^
20 < IN = 1170 < 0
0 > OUT = 1170 > 0
v ^
510 650

ANDERSON STREET (NS) / TAYLOR STREET (EW)

FUTURE DIRECTIONAL TURN VOLUMES FROM FUTURE DIRECTIONAL LINK VOLUMES

NCHRP 255

OPENING YEAR (2013) TRAFFIC CONDITIONS									
MORNING PEAK HOUR INPUT DATA					EVENING PEAK HOUR INPUT DATA				
APPROACH	TURNING MOVEMENT	BASE YEAR COUNT	APPROACH	OPENING YEAR TOTAL	APPROACH	TURNING MOVEMENT	BASE YEAR COUNT	APPROACH	OPENING YEAR TOTAL
NORTH	LEFT	**91**	SOUTH LEG		NORTH	LEFT	**15**	SOUTH LEG	
BOUND	THRU	**474**	IN ...	**600**	BOUND	THRU	**595**	IN ...	**650**
	RIGHT	**0**	OUT ...	**530**		RIGHT	**0**	OUT ...	**510**
SOUTH	LEFT	**0**	NORTH LEG		SOUTH	LEFT	**0**	NORTH LEG	
BOUND	THRU	**473**	IN ...	**570**	BOUND	THRU	**474**	IN ...	**520**
	RIGHT	**41**	OUT ...	**510**		RIGHT	**5**	OUT ...	**640**
EAST	LEFT	**1**	WEST LEG		EAST	LEFT	**0**	WEST LEG	
BOUND	THRU	**0**	IN ...	**0**	BOUND	THRU	**0**	IN ...	**0**
	RIGHT	**0**	OUT ...	**130**		RIGHT	**0**	OUT ...	**20**
WEST	LEFT	**0**	EAST LEG		WEST	LEFT	**0**	EAST LEG	
BOUND	THRU	**0**	IN ...	**0**	BOUND	THRU	**0**	IN ...	**0**
	RIGHT	**0**	OUT ...	**0**		RIGHT	**0**	OUT ...	**0**

OPENING YEAR (2013) TRAFFIC CONDITIONS									
MORNING PEAK HOUR RESULTS					EVENING PEAK HOUR RESULTS				
APPROACH	TURNING MOVEMENT	BASE YEAR COUNT	OPENING YEAR FORECAST	PEAK - DAILY RELATIONSHIP	APPROACH	TURNING MOVEMENT	BASE YEAR COUNT	OPENING YEAR FORECAST	PEAK - DAILY RELATIONSHIP
NORTH	LEFT	**91**	**94**	NORTH LEG	NORTH	LEFT	**15**	**16**	NORTH LEG
BOUND	THRU	**474**	**510**	RATIO **8.1%**	BOUND	THRU	**595**	**640**	RATIO **8.6%**
	RIGHT	**0**	**0**	ADT 13,400		RIGHT	**0**	**0**	ADT 13,400
SOUTH	LEFT	**0**	**0**	SOUTH LEG	SOUTH	LEFT	**0**	**0**	SOUTH LEG
BOUND	THRU	**473**	**530**	RATIO **8.3%**	BOUND	THRU	**474**	**510**	RATIO **8.5%**
	RIGHT	**41**	**43**	ADT 13,700		RIGHT	**5**	**5**	ADT 13,700
EAST	LEFT	**1**	**2**	EAST LEG	EAST	LEFT	**0**	**0**	EAST LEG
BOUND	THRU	**0**	**0**	RATIO **#DIV/0!**	BOUND	THRU	**0**	**0**	RATIO **#DIV/0!**
	RIGHT	**0**	**0**	ADT 0		RIGHT	**0**	**0**	ADT 0
WEST	LEFT	**0**	**0**	WEST LEG	WEST	LEFT	**0**	**0**	WEST LEG
BOUND	THRU	**0**	**0**	RATIO **69.5%**	BOUND	THRU	**0**	**0**	RATIO **10.7%**
	RIGHT	**0**	**0**	ADT 200		RIGHT	**0**	**0**	ADT 200

ANDERSON STREET (NS) / PROSPECT AVENUE (EW)

MORNING PEAK HOUR

EXISTING PEAK HOUR TURNING MOVEMENT VOLUMES (AUTOS):

2011

		0	362	62	
		<	v	>	
49	^			^	52
12	>			<	0
54	v			v	26
		<	^	>	
		0	443	60	

EXISTING PEAK HOUR COUNT YEAR (AUTOS)

2011

			424	544	
			v	^	
0	<	IN =	1120	<	78
115	>	OUT =	1120	>	134
			v	^	
			442	503	

EXISTING PEAK HOUR TURNING MOVEMENT VOLUMES (TRUCKS IN PCE'S):

		0	39	11	
		<	v	>	
6	^			^	14
6	>			<	0
2	v			v	6
		<	^	>	
		0	28	6	

PCE FACTORS BY AXLE:

2: 1.5 3: 2.0 4+: 3.0

TOTAL EXISTING PEAK HOUR TURNING MOVEMENT VOLUMES (PCES):

2011

		0	401	73	
		<	v	>	
55	^			^	66
18	>			<	0
56	v			v	32
		<	^	>	
		0	471	66	

EXISTING PEAK PERIOD MODEL YEAR (AUTO):

2000

			613	776	
			v	^	
0	<	IN =	1389	<	0
0	>	OUT =	1389	>	0
			v	^	
			613	776	

EXISTING PEAK PERIOD MODEL YEAR (TRUCKS IN PCE'S):

1994

			10	48	
			v	^	
0	<	IN =	58	<	0
0	>	OUT =	58	>	0
			v	^	
			10	48	

EXISTING PEAK HOUR MODEL YEAR (PCE'S):

PHF FOR CARS: 0.38

PHF FOR TRUCKS: 0.333

			236	311	
			v	^	
0	<	IN =	547	<	0
0	>	OUT =	547	>	0
			v	^	
			236	311	

FUTURE PEAK PERIOD MODEL YEAR (AUTO):

2030

			2815	1728	
			v	^	
176	<	IN =	5410	<	1398
34	>	OUT =	5410	>	1998
			v	^	
			1508	1163	

FUTURE PEAK PERIOD MODEL YEAR (TRUCKS IN PCE'S):

2020

			51	167	
			v	^	
0	<	IN =	218	<	0
0	>	OUT =	218	>	0
			v	^	
			51	167	

FUTURE PEAK HOUR MODEL YEAR (PCE'S):

PHF FOR CARS: 0.38

PHF FOR TRUCKS: 0.333

			1087	712	
			v	^	
67	<	IN =	2128	<	531
13	>	OUT =	2128	>	759
			v	^	
			590	498	

RAW GROWTH (PCE'S): 2000 TO 2030

CONVERSION OF TRUCKS TO: 2025

FACTOR = 1.25

			854	411	
			v	^	
67	<			<	531
13	>			>	759
			v	^	
			357	197	

ADJUSTED GROWTH (PCE'S): 2000 TO 2030

10 MINIMUM GROWTH %

			850	410	
			v	^	
70	<	IN =	1590	<	530
10	>	OUT =	1600	>	760
			v	^	
			360	200	

OPENING YEAR GROWTH: 2011 TO 2013

2 YEARS

			60	30	
			v	^	
0	<			<	40
0	>			>	50
			v	^	
			20	10	

INITIAL OPENING YEAR VOLUMES:

2013

			530	620	
			v	^	
0	<	IN =	1350	<	140
130	>	OUT =	1340	>	210
			v	^	
			510	550	

BALANCED OPENING YEAR VOLUMES:

2013

			530	620	
			v	^	
0	<	IN =	1350	<	140
130	>	OUT =	1340	>	210
			v	^	
			510	550	

EVENING PEAK HOUR

EXISTING PEAK HOUR TURNING MOVEMENT VOLUMES (AUTOS):

2011

		0	392	42	
		<	v	>	
81	^			^	83
23	>			<	0
124	v			v	72
		<	^	>	
		0	397	59	

EXISTING PEAK HOUR COUNT YEAR (AUTOS):

2011

			434	561	
			v	^	
0	<	IN =	1273	<	155
228	>	OUT =	1273	>	124
			v	^	
			588	456	

EXISTING PEAK HOUR TURNING MOVEMENT VOLUMES (TRUCKS IN PCE'S):

		0	53	5	
		<	v	>	
14	^			^	12
9	>			<	0
9	v			v	8
		<	^	>	
		0	36	3	

PCE FACTORS BY AXLE:

2: 1.5 3: 2 4+: 3.0

TOTAL EXISTING PEAK HOUR TURNING MOVEMENT VOLUMES (PCES):

2011

		0	445	47	
		<	v	>	
95	^			^	95
32	>			<	0
133	v			v	80
		<	^	>	
		0	433	62	

EXISTING PEAK PERIOD MODEL YEAR (AUTO):

2000

			907	1263	
			v	^	
0	<	IN =	2170	<	0
0	>	OUT =	2170	>	0
			v	^	
			907	1263	

EXISTING PEAK PERIOD MODEL YEAR (TRUCKS IN PCE'S):

1994

			28	63	
			v	^	
0	<	IN =	91	<	0
0	>	OUT =	91	>	0
			v	^	
			28	63	

EXISTING PEAK HOUR MODEL YEAR (PCE'S):

PHF FOR CARS: 0.28

PHF FOR TRUCKS: 0.25

			261	369	
			v	^	
0	<	IN =	630	<	0
0	>	OUT =	630	>	0
			v	^	
			261	369	

FUTURE PEAK PERIOD MODEL YEAR (AUTO):

2030

			3114	3586	
			v	^	
51	<	IN =	9898	<	2955
243	>	OUT =	9398	>	2647
			v	^	
			3114	3586	

FUTURE PEAK PERIOD MODEL YEAR (TRUCKS IN PCE'S):

2020

			81	70	
			v	^	
0	<	IN =	151	<	0
0	>	OUT =	151	>	0
			v	^	
			81	70	

FUTURE PEAK HOUR MODEL YEAR (PCE'S):

PHF FOR CARS: 0.28

PHF FOR TRUCKS: 0.25

			892	1022	
			v	^	
14	<	IN =	2809	<	827
68	>	OUT =	2669	>	741
			v	^	
			892	1022	

RAW GROWTH (PCE'S): 2000 TO 2030

CONVERSION OF TRUCKS TO: 2025

FACTOR = 1.25

			635	653	
			v	^	
14	<			<	827
68	>			>	741
			v	^	
			635	653	

ADJUSTED GROWTH (PCE'S): 2000 TO 2030

10 MINIMUM GROWTH %

			630	650	
			v	^	
10	<	IN =	2180	<	830
70	>	OUT =	2030	>	740
			v	^	
			630	650	

OPENING YEAR GROWTH: 2011 TO 2013

2 YEARS

			40	40	
			v	^	
0	<			<	60
0	>			>	50
			v	^	
			40	40	

INITIAL OPENING YEAR VOLUMES:

2013

			530	660	
			v	^	
0	<	IN =	1570	<	240
260	>	OUT =	1550	>	190
			v	^	
			700	540	

BALANCED OPENING YEAR VOLUMES:

2013

			530	670	
			v	^	
0	<	IN =	1570	<	240
260	>	OUT =	1570	>	190
			v	^	
			710	540	

ANDERSON STREET (NS) / PROSPECT AVENUE (EW)

FUTURE DIRECTIONAL TURN VOLUMES FROM FUTURE DIRECTIONAL LINK VOLUMES

NCHRP 255

OPENING YEAR (2013) TRAFFIC CONDITIONS									
MORNING PEAK HOUR INPUT DATA					EVENING PEAK HOUR INPUT DATA				
APPROACH	TURNING MOVEMENT	BASE YEAR COUNT	APPROACH	OPENING YEAR TOTAL	APPROACH	TURNING MOVEMENT	BASE YEAR COUNT	APPROACH	OPENING YEAR TOTAL
NORTH	LEFT	**0**	SOUTH LEG		NORTH	LEFT	**0**	SOUTH LEG	
BOUND	THRU	**471**	IN ...	**550**	BOUND	THRU	**433**	IN ...	**540**
	RIGHT	**66**	OUT ...	**510**		RIGHT	**62**	OUT ...	**710**
SOUTH	LEFT	**73**	NORTH LEG		SOUTH	LEFT	**47**	NORTH LEG	
BOUND	THRU	**401**	IN ...	**530**	BOUND	THRU	**445**	IN ...	**530**
	RIGHT	**0**	OUT ...	**620**		RIGHT	**0**	OUT ...	**670**
EAST	LEFT	**55**	WEST LEG		EAST	LEFT	**95**	WEST LEG	
BOUND	THRU	**18**	IN ...	**130**	BOUND	THRU	**32**	IN ...	**260**
	RIGHT	**56**	OUT ...	**0**		RIGHT	**133**	OUT ...	**0**
WEST	LEFT	**32**	EAST LEG		WEST	LEFT	**80**	EAST LEG	
BOUND	THRU	**0**	IN ...	**140**	BOUND	THRU	**0**	IN ...	**240**
	RIGHT	**66**	OUT ...	**210**		RIGHT	**95**	OUT ...	**190**

OPENING YEAR (2013) TRAFFIC CONDITIONS									
MORNING PEAK HOUR RESULTS					EVENING PEAK HOUR RESULTS				
APPROACH	TURNING MOVEMENT	BASE YEAR COUNT	OPENING YEAR FORECAST	PEAK - DAILY RELATIONSHIP	APPROACH	TURNING MOVEMENT	BASE YEAR COUNT	OPENING YEAR FORECAST	PEAK - DAILY RELATIONSHIP
NORTH	LEFT	**0**	**0**	NORTH LEG	NORTH	LEFT	**0**	**0**	NORTH LEG
BOUND	THRU	**471**	**486**	RATIO **8.5%**	BOUND	THRU	**433**	**453**	RATIO **8.8%**
	RIGHT	**66**	**80**	ADT 13,700		RIGHT	**62**	**87**	ADT 13,700
SOUTH	LEFT	**73**	**107**	SOUTH LEG	SOUTH	LEFT	**47**	**63**	SOUTH LEG
BOUND	THRU	**401**	**418**	RATIO **7.9%**	BOUND	THRU	**445**	**467**	RATIO **9.2%**
	RIGHT	**0**	**0**	ADT 13,700		RIGHT	**0**	**0**	ADT 13,700
EAST	LEFT	**55**	**56**	EAST LEG	EAST	LEFT	**95**	**98**	EAST LEG
BOUND	THRU	**18**	**23**	RATIO **7.6%**	BOUND	THRU	**32**	**40**	RATIO **9.3%**
	RIGHT	**56**	**58**	ADT 4,600		RIGHT	**133**	**137**	ADT 4,600
WEST	LEFT	**32**	**41**	WEST LEG	WEST	LEFT	**80**	**112**	WEST LEG
BOUND	THRU	**0**	**0**	RATIO **4.4%**	BOUND	THRU	**0**	**0**	RATIO **8.9%**
	RIGHT	**66**	**98**	ADT 3,100		RIGHT	**95**	**128**	ADT 3,100

ANDERSON STREET (NS) / PROJECT ENTRANCE (EW)

MORNING PEAK HOUR

EXISTING PEAK HOUR TURNING MOVEMENT VOLUMES (AUTOS):

2011

			113	348	0	
			<	v	>	
44	^				^	0
0	>				<	0
63	v				v	0
			<	^	>	
			146	441	0	

EXISTING PEAK HOUR COUNT YEAR (AUTOS):

2011

				461	485	
				v	^	
259	<		IN =	1155	<	0
107	>		OUT =	1155	>	0
				v	^	
				411	587	

EXISTING PEAK HOUR TURNING MOVEMENT VOLUMES (TRUCKS IN PCE'S):

			5	0	0	
			<	v	>	
0	^				^	0
0	>				<	0
14	v				v	0
			<	^	>	
			9	10	0	

PCE FACTORS BY AXLE:

2: 1.5 3: 2.0 4+: 3.0

TOTAL EXISTING PEAK HOUR TURNING MOVEMENT VOLUMES (PCES):

2011

			118	348	0	
			<	v	>	
44	^				^	0
0	>				<	0
77	v				v	0
			<	^	>	
			155	451	0	

EXISTING PEAK PERIOD MODEL YEAR (AUTO):

2000

				176	837	
				v	^	
0	<		IN =	1013	<	0
0	>		OUT =	1013	>	0
				v	^	
				176	837	

EXISTING PEAK PERIOD MODEL YEAR (TRUCKS IN PCE'S):

1994

				0	41	
				v	^	
0	<		IN =	41	<	0
0	>		OUT =	41	>	0
				v	^	
				0	41	

EXISTING PEAK HOUR MODEL YEAR (PCE'S):

PHF FOR CARS: 0.38

PHF FOR TRUCKS: 0.333

				67	332	
				v	^	
0	<		IN =	399	<	0
0	>		OUT =	399	>	0
				v	^	
				67	332	

FUTURE PEAK PERIOD MODEL YEAR (AUTO):

2030

				1508	1163	
				v	^	
852	<		IN =	3127	<	0
774	>		OUT =	3128	>	0
				v	^	
				1113	845	

FUTURE PEAK PERIOD MODEL YEAR (TRUCKS IN PCE'S):

2020

				45	142	
				v	^	
0	<		IN =	187	<	0
0	>		OUT =	187	>	0
				v	^	
				45	142	

FUTURE PEAK HOUR MODEL YEAR (PCE'S):

PHF FOR CARS: 0.38

PHF FOR TRUCKS: 0.333

				588	489	
				v	^	
324	<		IN =	1251	<	0
294	>		OUT =	1251	>	0
				v	^	
				438	368	

RAW GROWTH (PCE'S): 2000 TO 2030

CONVERSION OF TRUCKS TO: 2025

FACTOR = 1.25

				525	166	
				v	^	
324	<				<	0
294	>				>	0
				v	^	
				375	45	

ADJUSTED GROWTH (PCE'S): 2000 TO 2030

10 MINIMUM GROWTH %

				520	170	
				v	^	
320	<		IN =	860	<	0
290	>		OUT =	860	>	0
				v	^	
				370	50	

OPENING YEAR GROWTH: 2011 TO 2013

2 YEARS

				30	10	
				v	^	
20	<				<	0
20	>				>	0
				v	^	
				20	0	

INITIAL OPENING YEAR VOLUMES:

2013

				500	510	
				v	^	
290	<		IN =	1250	<	0
140	>		OUT =	1250	>	0
				v	^	
				450	610	

BALANCED OPENING YEAR VOLUMES:

2013

				500	510	
				v	^	
290	<		IN =	1250	<	0
140	>		OUT =	1250	>	0
				v	^	
				450	610	

EVENING PEAK HOUR

EXISTING PEAK HOUR TURNING MOVEMENT VOLUMES (AUTOS):

2011

			89	518	0	
			<	v	>	
105	^				^	0
3	>				<	0
94	v				v	0
			<	^	>	
			90	355	0	

EXISTING PEAK HOUR COUNT YEAR (AUTOS):

2011

				607	460	
				v	^	
179	<		IN =	1254	<	0
202	>		OUT =	1254	>	3
				v	^	
				612	445	

EXISTING PEAK HOUR TURNING MOVEMENT VOLUMES (TRUCKS IN PCE'S):

			0	19	0	
			<	v	>	
0	^				^	0
0	>				<	0
11	v				v	0
			<	^	>	
			11	0	0	

PCE FACTORS BY AXLE:

2: 1.5 3: 2 4+: 3.0

TOTAL EXISTING PEAK HOUR TURNING MOVEMENT VOLUMES (PCES):

2011

			89	537	0	
			<	v	>	
105	^				^	0
3	>				<	0
105	v				v	0
			<	^	>	
			101	355	0	

EXISTING PEAK PERIOD MODEL YEAR (AUTO):

2000

				957	742	
				v	^	
0	<		IN =	1699	<	0
0	>		OUT =	1699	>	0
				v	^	
				957	742	

EXISTING PEAK PERIOD MODEL YEAR (TRUCKS IN PCE'S):

1994

				26	50	
				v	^	
0	<		IN =	76	<	0
0	>		OUT =	76	>	0
				v	^	
				26	50	

EXISTING PEAK HOUR MODEL YEAR (PCE'S):

PHF FOR CARS: 0.28

PHF FOR TRUCKS: 0.25

				274	220	
				v	^	
0	<		IN =	495	<	0
0	>		OUT =	495	>	0
				v	^	
				274	220	

FUTURE PEAK PERIOD MODEL YEAR (AUTO):

2030

				1939	2438	
				v	^	
902	<		IN =	4955	<	0
1482	>		OUT =	4955	>	0
				v	^	
				1615	1534	

FUTURE PEAK PERIOD MODEL YEAR (TRUCKS IN PCE'S):

2020

				78	62	
				v	^	
0	<		IN =	140	<	0
0	>		OUT =	140	>	0
				v		
				78	62	

FUTURE PEAK HOUR MODEL YEAR (PCE'S):

PHF FOR CARS: 0.28

PHF FOR TRUCKS: 0.25

				562	698	
				v	^	
253	<		IN =	1422	<	0
415	>		OUT =	1422	>	0
				v	^	
				472	445	

RAW GROWTH (PCE'S): 2000 TO 2030

CONVERSION OF TRUCKS TO: 2025

FACTOR = 1.25

				291	479	
				v	^	
253	<				<	0
415	>				>	0
				v	^	
				200	226	

ADJUSTED GROWTH (PCE'S): 2000 TO 2030

10 MINIMUM GROWTH %

				290	480	
				v	^	
250	<		IN =	930	<	0
410	>		OUT =	930	>	0
				v	^	
				200	230	

OPENING YEAR GROWTH: 2011 TO 2013

2 YEARS

				20	30	
				v	^	
20	<				<	0
30	>				>	0
				v	^	
				10	20	

INITIAL OPENING YEAR VOLUMES:

2013

				650	490	
				v	^	
210	<		IN =	1370	<	0
240	>		OUT =	1350	>	0
				v	^	
				650	480	

BALANCED OPENING YEAR VOLUMES:

2013

				650	500	
				v	^	
210	<		IN =	1370	<	0
240	>		OUT =	1370	>	0
				v	^	
				660	480	

ANDERSON STREET (NS) / PROJECT ENTRANCE (EW)

FUTURE DIRECTIONAL TURN VOLUMES FROM FUTURE DIRECTIONAL LINK VOLUMES

NCHRP 255

OPENING YEAR (2013) TRAFFIC CONDITIONS									
MORNING PEAK HOUR INPUT DATA					EVENING PEAK HOUR INPUT DATA				
APPROACH	TURNING MOVEMENT	BASE YEAR COUNT	APPROACH	OPENING YEAR TOTAL	APPROACH	TURNING MOVEMENT	BASE YEAR COUNT	APPROACH	OPENING YEAR TOTAL
NORTH	LEFT	**155**	SOUTH LEG		NORTH	LEFT	**101**	SOUTH LEG	
BOUND	THRU	**451**	IN ...	**610**	BOUND	THRU	**355**	IN ...	**480**
	RIGHT	**0**	OUT ...	**450**		RIGHT	**0**	OUT ...	**660**
SOUTH	LEFT	**0**	NORTH LEG		SOUTH	LEFT	**0**	NORTH LEG	
BOUND	THRU	**348**	IN ...	**500**	BOUND	THRU	**537**	IN ...	**650**
	RIGHT	**118**	OUT ...	**510**		RIGHT	**89**	OUT ...	**500**
EAST	LEFT	**44**	WEST LEG		EAST	LEFT	**105**	WEST LEG	
BOUND	THRU	**0**	IN ...	**140**	BOUND	THRU	**3**	IN ...	**240**
	RIGHT	**77**	OUT ...	**290**		RIGHT	**105**	OUT ...	**210**
WEST	LEFT	**0**	EAST LEG		WEST	LEFT	**0**	EAST LEG	
BOUND	THRU	**0**	IN ...	**0**	BOUND	THRU	**0**	IN ...	**0**
	RIGHT	**0**	OUT ...	**0**		RIGHT	**0**	OUT ...	**0**

OPENING YEAR (2013) TRAFFIC CONDITIONS									
MORNING PEAK HOUR RESULTS					EVENING PEAK HOUR RESULTS				
APPROACH	TURNING MOVEMENT	BASE YEAR COUNT	OPENING YEAR FORECAST	PEAK - DAILY RELATIONSHIP	APPROACH	TURNING MOVEMENT	BASE YEAR COUNT	OPENING YEAR FORECAST	PEAK - DAILY RELATIONSHIP
NORTH	LEFT	**155**	**160**	NORTH LEG	NORTH	LEFT	**101**	**107**	NORTH LEG
BOUND	THRU	**451**	**456**	RATIO **7.3%**	BOUND	THRU	**355**	**373**	RATIO **8.3%**
	RIGHT	**0**	**0**	ADT 13,800		RIGHT	**0**	**0**	ADT 13,800
SOUTH	LEFT	**0**	**0**	SOUTH LEG	SOUTH	LEFT	**0**	**0**	SOUTH LEG
BOUND	THRU	**348**	**364**	RATIO **8.3%**	BOUND	THRU	**537**	**547**	RATIO **8.8%**
	RIGHT	**118**	**135**	ADT 12,900		RIGHT	**89**	**103**	ADT 12,900
EAST	LEFT	**44**	**54**	EAST LEG	EAST	LEFT	**105**	**127**	EAST LEG
BOUND	THRU	**0**	**0**	RATIO **#DIV/0!**	BOUND	THRU	**3**	**4**	RATIO **#DIV/0!**
	RIGHT	**77**	**86**	ADT 0		RIGHT	**105**	**113**	ADT 0
WEST	LEFT	**0**	**0**	WEST LEG	WEST	LEFT	**0**	**0**	WEST LEG
BOUND	THRU	**0**	**0**	RATIO **8.7%**	BOUND	THRU	**0**	**0**	RATIO **9.1%**
	RIGHT	**0**	**0**	ADT 5,000		RIGHT	**0**	**0**	ADT 5,000

ANDERSON STREET (NS) / STARR STREET (EW)

MORNING PEAK HOUR

EXISTING PEAK HOUR TURNING MOVEMENT VOLUMES (AUTOS):

2011

```
                    0   412   4
                  <   v   >
            0 ^                 ^   12
            0 >                 <    0
            0 v                 v    2
                  <   ^   >
                    0   586   12
```

EXISTING PEAK HOUR COUNT YEAR (AUTOS):

2011

```
                    416   598
                    v     ^
        0 <   IN  =   1028 <   14
        0 >   OUT =   1028 >   16
                    v     ^
                    414   598
```

EXISTING PEAK HOUR TURNING MOVEMENT VOLUMES (TRUCKS IN PCE'S):

```
                    0   26   0
                  <   v   >
            0 ^                 ^   2
            0 >                 <   0
            0 v                 v   0
                  <   ^   >
                    0   22   0
```

PCE FACTORS BY AXLE:

2: 1.5 3: 2.0 4+: 3.0

TOTAL EXISTING PEAK HOUR TURNING MOVEMENT VOLUMES (PCES):

2011

```
                    0   438   4
                  <   v   >
            0 ^                 ^   14
            0 >                 <    0
            0 v                 v    2
                  <   ^   >
                    0   608   12
```

EXISTING PEAK PERIOD MODEL YEAR (AUTO):

2000

```
                    176   837
                    v     ^
        0 <   IN  =   1013 <   0
        0 >   OUT =   1013 >   0
                    v     ^
                    176   837
```

EXISTING PEAK PERIOD MODEL YEAR (TRUCKS IN PCE'S):

1994

```
                    0   41
                    v   ^
        0 <   IN  =   41 <   0
        0 >   OUT =   41 >   0
                    v   ^
                    0   41
```

EXISTING PEAK HOUR MODEL YEAR (PCE'S):

PHF FOR CARS: 0.38

PHF FOR TRUCKS: 0.333

```
                    67   332
                    v    ^
        0 <   IN  =   399 <   0
        0 >   OUT =   399 >   0
                    v    ^
                    67   332
```

FUTURE PEAK PERIOD MODEL YEAR (AUTO):

2030

```
                    1113   845
                    v      ^
        0 <   IN  =   1958 <   0
        0 >   OUT =   1958 >   0
                    v      ^
                    1113   845
```

FUTURE PEAK PERIOD MODEL YEAR (TRUCKS IN PCE'S).

2020

```
                    45   142
                    v    ^
        0 <   IN  =   187 <   0
        0 >   OUT =   187 >   0
                    v    ^
                    45   142
```

FUTURE PEAK HOUR MODEL YEAR (PCE'S):

PHF FOR CARS: 0.38

PHF FOR TRUCKS: 0.333

```
                    438   368
                    v     ^
        0 <   IN  =   806 <   0
        0 >   OUT =   806 >   0
                    v     ^
                    438   368
```

RAW GROWTH (PCE'S): 2000 TO 2030

CONVERSION OF TRUCKS TO: 2025

FACTOR = 1.25

```
                    375   45
                    v     ^
        0 <                 <   0
        0 >                 >   0
                    v     ^
                    375   45
```

ADJUSTED GROWTH (PCE'S): 2000 TO 2030

10 MINIMUM GROWTH %

```
                    370   60
                    v     ^
        0 <   IN  =   420 <   0
        0 >   OUT =   430 >   0
                    v     ^
                    370   50
```

OPENING YEAR GROWTH: 2011 TO 2013

2 YEARS

```
                    20   0
                    v    ^
        0 <                 <   0
        0 >                 >   0
                    v    ^
                    20   0
```

INITIAL OPENING YEAR VOLUMES:

2013

```
                    460   620
                    v     ^
        0 <   IN  =   1100 <   20
        0 >   OUT =   1100 >   20
                    v     ^
                    460   620
```

BALANCED OPENING YEAR VOLUMES:

2013

```
                    460   620
                    v     ^
        0 <   IN  =   1100 <   20
        0 >   OUT =   1100 >   20
                    v     ^
                    460   620
```

EVENING PEAK HOUR

EXISTING PEAK HOUR TURNING MOVEMENT VOLUMES (AUTOS):

2011

```
                    0   582   15
                  <   v   >
            0 ^                 ^   27
            0 >                 <    0
            0 v                 v   13
                  <   ^   >
                    0   437   8
```

EXISTING PEAK HOUR COUNT YEAR (AUTOS):

2011

```
                    597   464
                    v     ^
        0 <   IN  =   1082 <   40
        0 >   OUT =   1082 >   23
                    v     ^
                    595   445
```

EXISTING PEAK HOUR TURNING MOVEMENT VOLUMES (TRUCKS IN PCE'S):

```
                    0   29   0
                  <   v   >
            0 ^                 ^   0
            0 >                 <   0
            0 v                 v   0
                  <   ^   >
                    0   11   0
```

PCE FACTORS BY AXLE:

2: 1.5 3: 2 4+: 3.0

TOTAL EXISTING PEAK HOUR TURNING MOVEMENT VOLUMES (PCES):

2011

```
                    0   611   15
                  <   v   >
            0 ^                 ^   27
            0 >                 <    0
            0 v                 v   13
                  <   ^   >
                    0   448   8
```

EXISTING PEAK PERIOD MODEL YEAR (AUTO):

2000

```
                    957   742
                    v     ^
        0 <   IN  =   1699 <   0
        0 >   OUT =   1699 >   0
                    v     ^
                    957   742
```

EXISTING PEAK PERIOD MODEL YEAR (TRUCKS IN PCE'S):

1994

```
                    26   50
                    v    ^
        0 <   IN  =   76 <   0
        0 >   OUT =   76 >   0
                    v    ^
                    26   50
```

EXISTING PEAK HOUR MODEL YEAR (PCE'S):

PHF FOR CARS: 0.28

PHF FOR TRUCKS: 0.25

```
                    274   220
                    v     ^
        0 <   IN  =   495 <   0
        0 >   OUT =   495 >   0
                    v     ^
                    274   220
```

FUTURE PEAK PERIOD MODEL YEAR (AUTO):

2030

```
                    1615   1534
                    v      ^
        0 <   IN  =   3149 <   0
        0 >   OUT =   3149 >   0
                    v      ^
                    1615   1534
```

FUTURE PEAK PERIOD MODEL YEAR (TRUCKS IN PCE'S):

2020

```
                    78   62
                    v    ^
        0 <   IN  =   140 <   0
        0 >   OUT =   140 >   0
                    v    ^
                    78   62
```

FUTURE PEAK HOUR MODEL YEAR (PCE'S):

PHF FOR CARS: 0.28

PHF FOR TRUCKS: 0.25

```
                    472   445
                    v     ^
        0 <   IN  =   917 <   0
        0 >   OUT =   917 >   0
                    v     ^
                    472   445
```

RAW GROWTH (PCE'S): 2000 TO 2030

CONVERSION OF TRUCKS TO: 2025

FACTOR = 1.25

```
                    200   226
                    v     ^
        0 <                 <   0
        0 >                 >   0
                    v     ^
                    200   226
```

ADJUSTED GROWTH (PCE'S): 2000 TO 2030

10 MINIMUM GROWTH %

```
                    200   230
                    v     ^
        0 <   IN  =   430 <   0
        0 >   OUT =   430 >   0
                    v     ^
                    200   230
```

OPENING YEAR GROWTH: 2011 TO 2013

2 YEARS

```
                    10   20
                    v    ^
        0 <                 <   0
        0 >                 >   0
                    v    ^
                    10   20
```

INITIAL OPENING YEAR VOLUMES:

2013

```
                    640   500
                    v     ^
        0 <   IN  =   1160 <   40
        0 >   OUT =   1150 >   20
                    v     ^
                    630   480
```

BALANCED OPENING YEAR VOLUMES:

2013

```
                    640   500
                    v     ^
        0 <   IN  =   1160 <   40
        0 >   OUT =   1160 >   20
                    v     ^
                    640   480
```

ANDERSON STREET (NS) / STARR STREET (EW)

FUTURE DIRECTIONAL TURN VOLUMES FROM FUTURE DIRECTIONAL LINK VOLUMES

NCHRP 255

OPENING YEAR (2013) TRAFFIC CONDITIONS									
MORNING PEAK HOUR INPUT DATA					EVENING PEAK HOUR INPUT DATA				
APPROACH	TURNING MOVEMENT	BASE YEAR COUNT	APPROACH	OPENING YEAR TOTAL	APPROACH	TURNING MOVEMENT	BASE YEAR COUNT	APPROACH	OPENING YEAR TOTAL
NORTH	LEFT	**0**	SOUTH LEG		NORTH	LEFT	**0**	SOUTH LEG	
BOUND	THRU	**608**	IN ...	**620**	BOUND	THRU	**448**	IN ...	**480**
	RIGHT	**12**	OUT ...	**460**		RIGHT	**8**	OUT ...	**640**
SOUTH	LEFT	**4**	NORTH LEG		SOUTH	LEFT	**15**	NORTH LEG	
BOUND	THRU	**438**	IN ...	**460**	BOUND	THRU	**611**	IN ...	**640**
	RIGHT	**0**	OUT ...	**620**		RIGHT	**0**	OUT ...	**500**
EAST	LEFT	**0**	WEST LEG		EAST	LEFT	**0**	WEST LEG	
BOUND	THRU	**0**	IN ...	**0**	BOUND	THRU	**0**	IN ...	**0**
	RIGHT	**0**	OUT ...	**0**		RIGHT	**0**	OUT ...	**0**
WEST	LEFT	**2**	EAST LEG		WEST	LEFT	**13**	EAST LEG	
BOUND	THRU	**0**	IN ...	**20**	BOUND	THRU	**0**	IN ...	**40**
	RIGHT	**14**	OUT ...	**20**		RIGHT	**27**	OUT ...	**20**

OPENING YEAR (2013) TRAFFIC CONDITIONS									
MORNING PEAK HOUR RESULTS					EVENING PEAK HOUR RESULTS				
APPROACH	TURNING MOVEMENT	BASE YEAR COUNT	OPENING YEAR FORECAST	PEAK - DAILY RELATIONSHIP	APPROACH	TURNING MOVEMENT	BASE YEAR COUNT	OPENING YEAR FORECAST	PEAK - DAILY RELATIONSHIP
NORTH	LEFT	**0**	**0**	NORTH LEG	NORTH	LEFT	**0**	**0**	NORTH LEG
BOUND	THRU	**608**	**627**	RATIO **8.6%**	BOUND	THRU	**448**	**473**	RATIO **8.9%**
	RIGHT	**12**	**15**	ADT 12,900		RIGHT	**8**	**9**	ADT 12,900
SOUTH	LEFT	**4**	**5**	SOUTH LEG	SOUTH	LEFT	**15**	**16**	SOUTH LEG
BOUND	THRU	**438**	**457**	RATIO **8.7%**	BOUND	THRU	**611**	**627**	RATIO **8.8%**
	RIGHT	**0**	**0**	ADT 12,700		RIGHT	**0**	**0**	ADT 12,700
EAST	LEFT	**0**	**0**	EAST LEG	EAST	LEFT	**0**	**0**	EAST LEG
BOUND	THRU	**0**	**0**	RATIO **5.7%**	BOUND	THRU	**0**	**0**	RATIO **9.4%**
	RIGHT	**0**	**0**	ADT 700		RIGHT	**0**	**0**	ADT 700
WEST	LEFT	**2**	**3**	WEST LEG	WEST	LEFT	**13**	**14**	WEST LEG
BOUND	THRU	**0**	**0**	RATIO **#DIV/0!**	BOUND	THRU	**0**	**0**	RATIO **#DIV/0!**
	RIGHT	**14**	**17**	ADT 0		RIGHT	**27**	**27**	ADT 0

ANDERSON STREET (NS) / BARTON ROAD (EW)

MORNING PEAK HOUR

EXISTING PEAK HOUR TURNING MOVEMENT VOLUMES (AUTOS):
2011

		111	161	119	
		<	v	>	
242 ^				^	171
729 >				<	660
111 v				v	138
		<	^	>	
		82	136	29	

EXISTING PEAK HOUR COUNT YEAR (AUTOS):
2011

			391	549	
			v	^	
853 <	IN =		2689	<	969
1082 >	OUT =		2689	>	877
			v	^	
			410	247	

EXISTING PEAK HOUR TURNING MOVEMENT VOLUMES (TRUCKS IN PCE'S):

		2	6	20	
		<	v	>	
6 ^				^	10
25 >				<	25
5 v				v	5
		<	^	>	
		0	6	3	

PCE FACTORS BY AXLE:
2: 1.5 3: 2.0 4+: 3.0

TOTAL EXISTING PEAK HOUR TURNING MOVEMENT VOLUMES (PCES):
2011

		113	167	139	
		<	v	>	
248 ^				^	181
754 >				<	685
116 v				v	143
		<	^	>	
		82	142	32	

EXISTING PEAK PERIOD MODEL YEAR (AUTO):
2000

			176	837	
			v	^	
1987 <	IN =		4178	<	2180
1150 >	OUT =		4178	>	1071
			v	^	
			283	672	

EXISTING PEAK PERIOD MODEL YEAR (TRUCKS IN PCE'S):
1994

			0	41	
			v	^	
96 <	IN =		248	<	111
111 >	OUT =		247	>	81
			v	^	
			29	26	

EXISTING PEAK HOUR MODEL YEAR (PCE'S):
PHF FOR CARS: 0.38
PHF FOR TRUCKS: 0.333

			67	332	
			v	^	
787 <	IN =		1670	<	865
474 >	OUT =		1670	>	434
			v	^	
			117	264	

FUTURE PEAK PERIOD MODEL YEAR (AUTO):
2030

			1113	845	
			v	^	
2157 <	IN =		6510	<	2228
2693 >	OUT =		6511	>	3001
			v	^	
			508	476	

FUTURE PEAK PERIOD MODEL YEAR (TRUCKS IN PCE'S):
2020

			45	142	
			v	^	
155 <	IN =		469	<	195
107 >	OUT =		470	>	117
			v	^	
			56	122	

FUTURE PEAK HOUR MODEL YEAR (PCE'S):
PHF FOR CARS: 0.38
PHF FOR TRUCKS: 0.333

			438	368	
			v	^	
871 <	IN =		2630	<	912
1059 >	OUT =		2631	>	1179
			v	^	
			212	222	

RAW GROWTH (PCE'S): 2000 TO 2030
CONVERSION OF TRUCKS TO: 2025
FACTOR = 1.25

			375	45	
			v	^	
89 <				<	53
585 >				>	748
			v	^	
			97	-35	

ADJUSTED GROWTH (PCE'S): 2000 TO 2030
10 MINIMUM GROWTH %

			370	60	
			v	^	
90 <	IN =		1050	<	100
580 >	OUT =		1000	>	750
			v	^	
			100	0	

OPENING YEAR GROWTH: 2011 TO 2013
2 YEARS

			20	0	
			v	^	
10 <				<	10
40 >				>	50
			v	^	
			10	0	

INITIAL OPENING YEAR VOLUMES:
2013

			440	570	
			v	^	
890 <	IN =		2880	<	1020
1160 >	OUT =		2880	>	980
			v	^	
			440	260	

BALANCED OPENING YEAR VOLUMES:
2013

			440	570	
			v	^	
890 <	IN =		2880	<	1020
1160 >	OUT =		2880	>	980
			v	^	
			440	260	

EVENING PEAK HOUR

EXISTING PEAK HOUR TURNING MOVEMENT VOLUMES (AUTOS):
2011

		257	115	235	
		<	v	>	
152 ^				^	158
800 >				<	766
53 v				v	49
		<	^	>	
		181	128	79	

EXISTING PEAK HOUR COUNT YEAR (AUTOS):
2011

			607	438	
			v	^	
1204 <	IN =		2973	<	973
1005 >	OUT =		2973	>	1114
			v	^	
			217	388	

EXISTING PEAK HOUR TURNING MOVEMENT VOLUMES (TRUCKS IN PCE'S):

		6	5	20	
		<	v	>	
0 ^				^	8
15 >				<	11
0 v				v	5
		<	^	>	
		3	3	0	

PCE FACTORS BY AXLE:
2: 1.5 3: 2 4+: 3.0

TOTAL EXISTING PEAK HOUR TURNING MOVEMENT VOLUMES (PCES):
2011

		263	120	255	
		<	v	>	
152 ^				^	166
815 >				<	777
53 v				v	54
		<	^	>	
		184	131	79	

EXISTING PEAK PERIOD MODEL YEAR (AUTO):
2000

			957	742	
			v	^	
2181 <	IN =		7435	<	2296
3430 >	OUT =		7435	>	3407
			v	^	
			1105	752	

EXISTING PEAK PERIOD MODEL YEAR (TRUCKS IN PCE'S):
1994

			26	50	
			v	^	
37 <	IN =		243	<	52
131 >	OUT =		244	>	121
			v	^	
			36	34	

EXISTING PEAK HOUR MODEL YEAR (PCE'S):
PHF FOR CARS: 0.28
PHF FOR TRUCKS: 0.25

			274	220	
			v	^	
620 <	IN =		2143	<	656
993 >	OUT =		2143	>	984
			v	^	
			318	219	

FUTURE PEAK PERIOD MODEL YEAR (AUTO):
2030

			1615	1534	
			v	^	
4413 <	IN =		10388	<	4177
3683 >	OUT =		10388	>	3847
			v	^	
			594	913	

FUTURE PEAK PERIOD MODEL YEAR (TRUCKS IN PCE'S):
2020

			78	62	
			v	^	
299 <	IN =		736	<	306
307 >	OUT =		731	>	310
			v	^	
			60	45	

FUTURE PEAK HOUR MODEL YEAR (PCE'S):
PHF FOR CARS: 0.28
PHF FOR TRUCKS: 0.25

			472	445	
			v	^	
1310 <	IN =		3093	<	1246
1108 >	OUT =		3091	>	1155
			v	^	
			181	267	

RAW GROWTH (PCE'S): 2000 TO 2030
CONVERSION OF TRUCKS TO: 2025
FACTOR = 1.25

			200	226	
			v	^	
707 <				<	606
126 >				>	182
			v	^	
			-136	49	

ADJUSTED GROWTH (PCE'S): 2000 TO 2030
10 MINIMUM GROWTH %

			200	230	
			v	^	
710 <	IN =		990	<	610
130 >	OUT =		1120	>	180
			v	^	
			0	50	

OPENING YEAR GROWTH: 2011 TO 2013
2 YEARS

			10	20	
			v	^	
50 <				<	40
10 >				>	10
			v	^	
			0	0	

INITIAL OPENING YEAR VOLUMES:
2013

			650	470	
			v	^	
1270 <	IN =		3110	<	1040
1030 >	OUT =		3130	>	1160
			v	^	
			230	390	

BALANCED OPENING YEAR VOLUMES:
2013

			650	470	
			v	^	
1270 <	IN =		3130	<	1050
1040 >	OUT =		3130	>	1160
			v	^	
			230	390	

ANDERSON STREET (NS) / BARTON ROAD (EW)

FUTURE DIRECTIONAL TURN VOLUMES FROM FUTURE DIRECTIONAL LINK VOLUMES

NCHRP 255

OPENING YEAR (2013) TRAFFIC CONDITIONS									
MORNING PEAK HOUR INPUT DATA					EVENING PEAK HOUR INPUT DATA				
APPROACH	TURNING MOVEMENT	BASE YEAR COUNT	APPROACH	OPENING YEAR TOTAL	APPROACH	TURNING MOVEMENT	BASE YEAR COUNT	APPROACH	OPENING YEAR TOTAL
NORTH	LEFT	**82**	SOUTH LEG		NORTH	LEFT	**184**	SOUTH LEG	
BOUND	THRU	**142**	IN ...	**260**	BOUND	THRU	**131**	IN ...	**390**
	RIGHT	**32**	OUT ...	**440**		RIGHT	**79**	OUT ...	**230**
SOUTH	LEFT	**139**	NORTH LEG		SOUTH	LEFT	**255**	NORTH LEG	
BOUND	THRU	**167**	IN ...	**440**	BOUND	THRU	**120**	IN ...	**650**
	RIGHT	**113**	OUT ...	**570**		RIGHT	**263**	OUT ...	**470**
EAST	LEFT	**248**	WEST LEG		EAST	LEFT	**152**	WEST LEG	
BOUND	THRU	**754**	IN ...	**1,160**	BOUND	THRU	**815**	IN ...	**1,040**
	RIGHT	**116**	OUT ...	**890**		RIGHT	**53**	OUT ...	**1,270**
WEST	LEFT	**143**	EAST LEG		WEST	LEFT	**54**	EAST LEG	
BOUND	THRU	**685**	IN ...	**1,020**	BOUND	THRU	**777**	IN ...	**1,050**
	RIGHT	**181**	OUT ...	**980**		RIGHT	**166**	OUT ...	**1,160**

OPENING YEAR (2013) TRAFFIC CONDITIONS									
MORNING PEAK HOUR RESULTS					EVENING PEAK HOUR RESULTS				
APPROACH	TURNING MOVEMENT	BASE YEAR COUNT	OPENING YEAR FORECAST	PEAK - DAILY RELATIONSHIP	APPROACH	TURNING MOVEMENT	BASE YEAR COUNT	OPENING YEAR FORECAST	PEAK - DAILY RELATIONSHIP
NORTH	LEFT	**82**	**83**	NORTH LEG	NORTH	LEFT	**184**	**190**	NORTH LEG
BOUND	THRU	**142**	**143**	RATIO **8.0%**	BOUND	THRU	**131**	**132**	RATIO **8.8%**
	RIGHT	**32**	**34**	ADT 12,700		RIGHT	**79**	**82**	ADT 12,700
SOUTH	LEFT	**139**	**150**	SOUTH LEG	SOUTH	LEFT	**255**	**258**	SOUTH LEG
BOUND	THRU	**167**	**174**	RATIO **9.7%**	BOUND	THRU	**120**	**121**	RATIO **8.8%**
	RIGHT	**113**	**116**	ADT 7,200		RIGHT	**263**	**271**	ADT 7,200
EAST	LEFT	**248**	**256**	EAST LEG	EAST	LEFT	**152**	**160**	EAST LEG
BOUND	THRU	**754**	**796**	RATIO **7.9%**	BOUND	THRU	**815**	**826**	RATIO **8.8%**
	RIGHT	**116**	**118**	ADT 25,200		RIGHT	**53**	**54**	ADT 25,200
WEST	LEFT	**143**	**147**	WEST LEG	WEST	LEFT	**54**	**55**	WEST LEG
BOUND	THRU	**685**	**691**	RATIO **7.8%**	BOUND	THRU	**777**	**817**	RATIO **8.8%**
	RIGHT	**181**	**181**	ADT 26,300		RIGHT	**166**	**178**	ADT 26,300

Opening Year (2023)

CAMPUS STREET (NS) / STEWART STREET (EW)

MORNING PEAK HOUR

EXISTING PEAK HOUR TURNING MOVEMENT VOLUMES (AUTOS):
2011

```
                    1    31     9
                 <     v     >
        31 ^                   ^   279
        51 >                   <    35
        18 v                   v   315
                 <     ^     >
                   11   257   219
```

EXISTING PEAK HOUR COUNT YEAR (AUTOS):
2011

```
                         41   567
                          v     ^
        47 <     IN =    1257 <   629
       100 >    OUT =    1257 >   279
                          v     ^
                        364   487
```

EXISTING PEAK HOUR TURNING MOVEMENT VOLUMES (TRUCKS IN PCE'S):

```
                    0     5     0
                 <     v     >
         0 ^                   ^     2
         3 >                   <     3
         2 v                   v     7
                 <     ^     >
                    0     6     6
```

PCE FACTORS BY AXLE:
2: 1.5 3: 2.0 4+: 3.0

TOTAL EXISTING PEAK HOUR TURNING MOVEMENT VOLUMES (PCES):
2011

```
                    1    36     9
                 <     v     >
        31 ^                   ^   281
        54 >                   <    38
        20 v                   v   322
                 <     ^     >
                   11   263   225
```

EXISTING PEAK PERIOD MODEL YEAR (AUTO):
2000

```
                         0     0
                          v     ^
         0 <     IN =     876 <   506
         0 >    OUT =     876 >   370
                          v     ^
                        506   370
```

EXISTING PEAK PERIOD MODEL YEAR (TRUCKS IN PCE'S):
1994

```
                         0     0
                          v     ^
         0 <     IN =       6 <     2
         0 >    OUT =       6 >     4
                          v     ^
                          2     4
```

EXISTING PEAK HOUR MODEL YEAR (PCE'S):
PHF FOR CARS: 0.38
PHF FOR TRUCKS: 0.333

```
                         0     0
                          v     ^
         0 <     IN =     335 <   193
         0 >    OUT =     335 >   142
                          v     ^
                        193   142
```

FUTURE PEAK PERIOD MODEL YEAR (AUTO):
2030

```
                         0     7
                          v     ^
        90 <     IN =    1123 <    95
      1017 >    OUT =    1123 >  1021
                          v     ^
                          5    11
```

FUTURE PEAK PERIOD MODEL YEAR (TRUCKS IN PCE'S):
2020

```
                         0     0
                          v     ^
        14 <     IN =      32 <    14
        18 >    OUT =      34 >    18
                          v     ^
                          2     0
```

FUTURE PEAK HOUR MODEL YEAR (PCE'S):
PHF FOR CARS: 0.38
PHF FOR TRUCKS: 0.333

```
                         0     3
                          v     ^
        39 <     IN =     437 <    41
       392 >    OUT =     438 >   394
                          v     ^
                          3     4
```

RAW GROWTH (PCE'S): 2000 TO 2030
CONVERSION OF TRUCKS TO: 2025
FACTOR = 1.25

```
                         0     3
                          v     ^
        40 <                <  -151
       394 >                >   253
                          v     ^
                       -190  -138
```

ADJUSTED GROWTH (PCE'S): 2000 TO 2030
10 MINIMUM GROWTH %

```
                         0    60
                          v     ^
        40 <     IN =     450 <    60
       390 >    OUT =     350 >   250
                          v     ^
                          0     0
```

OPENING YEAR GROWTH: 2011 TO 2023
12 YEARS

```
                         0    20
                          v     ^
        20 <                <    20
       160 >                >   100
                          v     ^
                          0     0
```

INITIAL OPENING YEAR VOLUMES:
2023

```
                        50   600
                          v     ^
        70 <     IN =    1480 <   660
       270 >    OUT =    1440 >   390
                          v     ^
                        380   500
```

BALANCED OPENING YEAR VOLUMES:
2023

```
                        50   620
                          v     ^
        70 <     IN =    1480 <   660
       270 >    OUT =    1480 >   400
                          v     ^
                        390   500
```

EVENING PEAK HOUR

EXISTING PEAK HOUR TURNING MOVEMENT VOLUMES (AUTOS):
2011

```
                   10   200   119
                 <     v     >
         5 ^                   ^   100
        31 >                   <    56
        25 v                   v   186
                 <     ^     >
                   13    60   231
```

EXISTING PEAK HOUR COUNT YEAR (AUTOS):
2011

```
                        329   165
                          v     ^
        79 <     IN =    1036 <   342
        61 >    OUT =    1036 >   381
                          v     ^
                        411   304
```

EXISTING PEAK HOUR TURNING MOVEMENT VOLUMES (TRUCKS IN PCE'S):

```
                    0    23     0
                 <     v     >
         0 ^                   ^     0
         0 >                   <     2
         0 v                   v     9
                 <     ^     >
                    0    20     6
```

PCE FACTORS BY AXLE:
2: 1.5 3: 2 4+: 3.0

TOTAL EXISTING PEAK HOUR TURNING MOVEMENT VOLUMES (PCES):
2011

```
                   10   223   119
                 <     v     >
         5 ^                   ^   100
        31 >                   <    58
        25 v                   v   195
                 <     ^     >
                   13    80   237
```

EXISTING PEAK PERIOD MODEL YEAR (AUTO):
2000

```
                         0     0
                          v     ^
         0 <     IN =    1546 <   967
         0 >    OUT =    1546 >   579
                          v     ^
                        967   579
```

EXISTING PEAK PERIOD MODEL YEAR (TRUCKS IN PCE'S):
1994

```
                         0     0
                          v     ^
         0 <     IN =       5 <     2
         0 >    OUT =       5 >     3
                          v     ^
                          2     3
```

EXISTING PEAK HOUR MODEL YEAR (PCE'S):
PHF FOR CARS: 0.28
PHF FOR TRUCKS: 0.25

```
                         0     0
                          v     ^
         0 <     IN =     434 <   271
         0 >    OUT =     434 >   163
                          v     ^
                        271   163
```

FUTURE PEAK PERIOD MODEL YEAR (AUTO):
2030

```
                         2     0
                          v     ^
      1120 <     IN =    1348 <  1122
       215 >    OUT =    1348 >   224
                          v     ^
                          4     9
```

FUTURE PEAK PERIOD MODEL YEAR (TRUCKS IN PCE'S):
2020

```
                         0     0
                          v     ^
        26 <     IN =      60 <    26
        27 >    OUT =      60 >    34
                          v     ^
                          0     7
```

FUTURE PEAK HOUR MODEL YEAR (PCE'S):
PHF FOR CARS: 0.28
PHF FOR TRUCKS: 0.25

```
                         1     0
                          v     ^
       320 <     IN =     392 <   321
        67 >    OUT =     392 >    71
                          v     ^
                          1     4
```

RAW GROWTH (PCE'S): 2000 TO 2030
CONVERSION OF TRUCKS TO: 2025
FACTOR = 1.25

```
                         1     0
                          v     ^
       322 <                <    51
        69 >                >   -90
                          v     ^
                       -270  -158
```

ADJUSTED GROWTH (PCE'S): 2000 TO 2030
10 MINIMUM GROWTH %

```
                        40    20
                          v     ^
       320 <     IN =     160 <    50
        70 >    OUT =     380 >    40
                          v     ^
                          0     0
```

OPENING YEAR GROWTH: 2011 TO 2023
12 YEARS

```
                        20    10
                          v     ^
       130 <                <    20
        30 >                >    20
                          v     ^
                          0     0
```

INITIAL OPENING YEAR VOLUMES:
2023

```
                       370   200
                          v     ^
       210 <     IN =    1160 <   370
        90 >    OUT =    1260 >   410
                          v     ^
                       440   330
```

BALANCED OPENING YEAR VOLUMES:
2023

```
                       400   200
                          v     ^
       210 <     IN =    1260 <   400
       100 >    OUT =    1260 >   410
                          v     ^
                       440   360
```

CAMPUS STREET (NS) / STEWART STREET (EW)

FUTURE DIRECTIONAL TURN VOLUMES FROM FUTURE DIRECTIONAL LINK VOLUMES

NCHRP 255

OPENING YEAR (2023) TRAFFIC CONDITIONS									
MORNING PEAK HOUR INPUT DATA					EVENING PEAK HOUR INPUT DATA				
APPROACH	TURNING MOVEMENT	BASE YEAR COUNT	APPROACH	OPENING YEAR TOTAL	APPROACH	TURNING MOVEMENT	BASE YEAR COUNT	APPROACH	OPENING YEAR TOTAL
NORTH	LEFT	**11**	SOUTH LEG		NORTH	LEFT	**13**	SOUTH LEG	
BOUND	THRU	**263**	IN ...	**500**	BOUND	THRU	**80**	IN ...	**360**
	RIGHT	**225**	OUT ...	**390**		RIGHT	**237**	OUT ...	**440**
SOUTH	LEFT	**9**	NORTH LEG		SOUTH	LEFT	**119**	NORTH LEG	
BOUND	THRU	**36**	IN ...	**50**	BOUND	THRU	**223**	IN ...	**400**
	RIGHT	**1**	OUT ...	**620**		RIGHT	**10**	OUT ...	**200**
EAST	LEFT	**31**	WEST LEG		EAST	LEFT	**5**	WEST LEG	
BOUND	THRU	**54**	IN ...	**270**	BOUND	THRU	**31**	IN ...	**100**
	RIGHT	**20**	OUT ...	**70**		RIGHT	**25**	OUT ...	**210**
WEST	LEFT	**322**	EAST LEG		WEST	LEFT	**195**	EAST LEG	
BOUND	THRU	**38**	IN ...	**660**	BOUND	THRU	**58**	IN ...	**400**
	RIGHT	**281**	OUT ...	**400**		RIGHT	**100**	OUT ...	**410**

OPENING YEAR (2023) TRAFFIC CONDITIONS									
MORNING PEAK HOUR RESULTS					EVENING PEAK HOUR RESULTS				
APPROACH	TURNING MOVEMENT	BASE YEAR COUNT	OPENING YEAR FORECAST	PEAK - DAILY RELATIONSHIP	APPROACH	TURNING MOVEMENT	BASE YEAR COUNT	OPENING YEAR FORECAST	PEAK - DAILY RELATIONSHIP
NORTH	LEFT	**11**	**14**	NORTH LEG	NORTH	LEFT	**13**	**37**	NORTH LEG
BOUND	THRU	**263**	**271**	RATIO **10.7%**	BOUND	THRU	**80**	**92**	RATIO **9.3%**
	RIGHT	**225**	**239**	ADT 6,500		RIGHT	**237**	**245**	ADT 6,500
SOUTH	LEFT	**9**	**12**	SOUTH LEG	SOUTH	LEFT	**119**	**129**	SOUTH LEG
BOUND	THRU	**36**	**37**	RATIO **10.1%**	BOUND	THRU	**223**	**239**	RATIO **9.2%**
	RIGHT	**1**	**2**	ADT 9,300		RIGHT	**10**	**32**	ADT 9,300
EAST	LEFT	**31**	**76**	EAST LEG	EAST	LEFT	**5**	**10**	EAST LEG
BOUND	THRU	**54**	**150**	RATIO **12.2%**	BOUND	THRU	**31**	**50**	RATIO **9.8%**
	RIGHT	**20**	**44**	ADT 8,900		RIGHT	**25**	**40**	ADT 8,900
WEST	LEFT	**322**	**332**	WEST LEG	WEST	LEFT	**195**	**201**	WEST LEG
BOUND	THRU	**38**	**54**	RATIO **11.0%**	BOUND	THRU	**58**	**141**	RATIO **10.0%**
	RIGHT	**281**	**297**	ADT 3,100		RIGHT	**100**	**103**	ADT 3,100

CAMPUS STREET (NS) / UNIVERSITY AVENUE (EW)

MORNING PEAK HOUR

EXISTING PEAK HOUR TURNING MOVEMENT VOLUMES (AUTOS):
2011

```
                    167   147    0
                  <     v     >
          224 ^                   ^    0
            0 >                   <    0
           68 v                   v    0
                  <     ^     >
                     41   290    1
```

EXISTING PEAK HOUR COUNT YEAR (AUTOS):
2011

```
                    314   514
                    v     ^
      208 <     IN =    938 <    0
      292 >     OUT =   938 >    1
                    v     ^
                    215   332
```

EXISTING PEAK HOUR TURNING MOVEMENT VOLUMES (TRUCKS IN PCE'S):

```
                      4     6     2
                    <     v     >
            2 ^                   ^    0
            0 >                   <    0
            0 v                   v    0
                    <     ^     >
                      2     8     0
```

PCE FACTORS BY AXLE:
2: 1.5 3: 2.0 4+: 3.0

TOTAL EXISTING PEAK HOUR TURNING MOVEMENT VOLUMES (PCES):
2011

```
                    171   153     2
                    <     v     >
          226 ^                   ^    0
            0 >                   <    0
           68 v                   v    0
                    <     ^     >
                     43   298     1
```

EXISTING PEAK PERIOD MODEL YEAR (AUTO):
2000

```
                    461   301
                    v     ^
      537 <     IN =   1100 <    0
      557 >     OUT =  1100 >    0
                    v     ^
                    262    82
```

EXISTING PEAK PERIOD MODEL YEAR (TRUCKS IN PCE'S):
1994

```
                      4     5
                    v     ^
        5 <     IN =     16 <    0
       10 >     OUT =    15 >    0
                    v     ^
                      5     2
```

EXISTING PEAK HOUR MODEL YEAR (PCE'S):
PHF FOR CARS: 0.38
PHF FOR TRUCKS: 0.333

```
                    177   116
                    v     ^
      206 <     IN =    423 <    0
      215 >     OUT =   423 >    0
                    v     ^
                    101    32
```

FUTURE PEAK PERIOD MODEL YEAR (AUTO):
2030

```
                     19   134
                    v     ^
       90 <     IN =   1264 <    0
     1165 >     OUT =  1264 >    0
                    v     ^
                   1040    80
```

FUTURE PEAK PERIOD MODEL YEAR (TRUCKS IN PCE'S):
2020

```
                      2     3
                    v     ^
        2 <     IN =      5 <    0
        3 >     OUT =     5 >    0
                    v     ^
                      0     0
```

FUTURE PEAK HOUR MODEL YEAR (PCE'S):
PHF FOR CARS: 0.38
PHF FOR TRUCKS: 0.333

```
                      8    52
                    v     ^
       35 <     IN =    482 <    0
      444 >     OUT =   482 >    0
                    v     ^
                    395    30
```

RAW GROWTH (PCE'S): 2000 TO 2030
CONVERSION OF TRUCKS TO: 2025
FACTOR = 1.25

```
                   -169   -64
                    v     ^
     -171 <                <    0
      228 >                >    0
                    v     ^
                    294    -2
```

ADJUSTED GROWTH (PCE'S): 2000 TO 2030
10 MINIMUM GROWTH %

```
                     30    50
                    v     ^
       20 <     IN =    260 <    0
      230 >     OUT =   360 >    0
                    v     ^
                    290     0
```

OPENING YEAR GROWTH: 2011 TO 2023
12 YEARS

```
                     10    20
                    v     ^
       10 <                <    0
       90 >                >    0
                    v     ^
                    120     0
```

INITIAL OPENING YEAR VOLUMES:
2023

```
                    340   540
                    v     ^
      220 <     IN =   1060 <    0
      380 >     OUT =  1100 >    0
                    v     ^
                    340   340
```

BALANCED OPENING YEAR VOLUMES:
2023

```
                    350   540
                    v     ^
      220 <     IN =   1090 <    0
      390 >     OUT =  1100 >    0
                    v     ^
                    340   350
```

EVENING PEAK HOUR

EXISTING PEAK HOUR TURNING MOVEMENT VOLUMES (AUTOS):
2011

```
                    204   200    0
                  <     v     >
          129 ^                   ^    0
            0 >                   <    0
           49 v                   v    0
                  <     ^     >
                     62   123    0
```

EXISTING PEAK HOUR COUNT YEAR (AUTOS):
2011

```
                    404   252
                    v     ^
      266 <     IN =    767 <    0
      178 >     OUT =   767 >    0
                    v     ^
                    249   185
```

EXISTING PEAK HOUR TURNING MOVEMENT VOLUMES (TRUCKS IN PCE'S):

```
                      8    23     0
                    <     v     >
            0 ^                   ^    0
            0 >                   <    0
            5 v                   v    2
                    <     ^     >
                      8    24     0
```

PCE FACTORS BY AXLE:
2: 1.5 3: 2 4+: 3.0

TOTAL EXISTING PEAK HOUR TURNING MOVEMENT VOLUMES (PCES):
2011

```
                    212   223     0
                    <     v     >
          129 ^                   ^    0
            0 >                   <    0
           54 v                   v    2
                    <     ^     >
                     70   147     0
```

EXISTING PEAK PERIOD MODEL YEAR (AUTO):
2000

```
                    852   346
                    v     ^
     1097 <     IN =   1672 <    0
      566 >     OUT =  1672 >    0
                    v     ^
                    229   254
```

EXISTING PEAK PERIOD MODEL YEAR (TRUCKS IN PCE'S):
1994

```
                      2     5
                    v     ^
        4 <     IN =     17 <    0
       15 >     OUT =    20 >    0
                    v     ^
                     11     0
```

EXISTING PEAK HOUR MODEL YEAR (PCE'S):
PHF FOR CARS: 0.28
PHF FOR TRUCKS: 0.25

```
                    239    98
                    v     ^
      308 <     IN =    472 <    0
      162 >     OUT =   473 >    0
                    v     ^
                     67    71
```

FUTURE PEAK PERIOD MODEL YEAR (AUTO):
2030

```
                    137    27
                    v     ^
     1114 <     IN =   1374 <    0
      242 >     OUT =  1375 >    0
                    v     ^
                    234   995
```

FUTURE PEAK PERIOD MODEL YEAR (TRUCKS IN PCE'S):
2020

```
                      2     6
                    v     ^
        2 <     IN =     11 <    0
        9 >     OUT =    11 >    0
                    v     ^
                      3     0
```

FUTURE PEAK HOUR MODEL YEAR (PCE'S):
PHF FOR CARS: 0.28
PHF FOR TRUCKS: 0.25

```
                     39     9
                    v     ^
      312 <     IN =    387 <    0
       70 >     OUT =   388 >    0
                    v     ^
                     66   279
```

RAW GROWTH (PCE'S): 2000 TO 2030
CONVERSION OF TRUCKS TO: 2025
FACTOR = 1.25

```
                   -200   -89
                    v     ^
        4 <                 <    0
      -93 >                 >    0
                    v     ^
                     -1   207
```

ADJUSTED GROWTH (PCE'S): 2000 TO 2030
10 MINIMUM GROWTH %

```
                     40    30
                    v     ^
       30 <     IN =    270 <    0
       20 >     OUT =    60 >    0
                    v     ^
                      0   210
```

OPENING YEAR GROWTH: 2011 TO 2023
12 YEARS

```
                     20    10
                    v     ^
       10 <                <    0
       10 >                >    0
                    v     ^
                      0    80
```

INITIAL OPENING YEAR VOLUMES:
2023

```
                    460   290
                    v     ^
      290 <     IN =    950 <    0
      190 >     OUT =   860 >    0
                    v     ^
                    280   300
```

BALANCED OPENING YEAR VOLUMES:
2023

```
                    460   320
                    v     ^
      320 <     IN =    950 <    0
      190 >     OUT =   950 >    0
                    v     ^
                    310   300
```

CAMPUS STREET (NS) / UNIVERSITY AVENUE (EW)

FUTURE DIRECTIONAL TURN VOLUMES FROM FUTURE DIRECTIONAL LINK VOLUMES

NCHRP 255

OPENING YEAR (2023) TRAFFIC CONDITIONS									
MORNING PEAK HOUR INPUT DATA					EVENING PEAK HOUR INPUT DATA				
APPROACH	TURNING MOVEMENT	BASE YEAR COUNT	APPROACH	OPENING YEAR TOTAL	APPROACH	TURNING MOVEMENT	BASE YEAR COUNT	APPROACH	OPENING YEAR TOTAL
NORTH	LEFT	**43**	SOUTH LEG		NORTH	LEFT	**70**	SOUTH LEG	
BOUND	THRU	**298**	IN ...	**350**	BOUND	THRU	**147**	IN ...	**300**
	RIGHT	**1**	OUT ...	**340**		RIGHT	**0**	OUT ...	**310**
SOUTH	LEFT	**2**	NORTH LEG		SOUTH	LEFT	**0**	NORTH LEG	
BOUND	THRU	**153**	IN ...	**350**	BOUND	THRU	**223**	IN ...	**460**
	RIGHT	**171**	OUT ...	**540**		RIGHT	**212**	OUT ...	**320**
EAST	LEFT	**226**	WEST LEG		EAST	LEFT	**129**	WEST LEG	
BOUND	THRU	**0**	IN ...	**390**	BOUND	THRU	**0**	IN ...	**190**
	RIGHT	**68**	OUT ...	**220**		RIGHT	**54**	OUT ...	**320**
WEST	LEFT	**0**	EAST LEG		WEST	LEFT	**2**	EAST LEG	
BOUND	THRU	**0**	IN ...	**0**	BOUND	THRU	**0**	IN ...	**0**
	RIGHT	**0**	OUT ...	**0**		RIGHT	**0**	OUT ...	**0**

OPENING YEAR (2023) TRAFFIC CONDITIONS									
MORNING PEAK HOUR RESULTS					EVENING PEAK HOUR RESULTS				
APPROACH	TURNING MOVEMENT	BASE YEAR COUNT	OPENING YEAR FORECAST	PEAK - DAILY RELATIONSHIP	APPROACH	TURNING MOVEMENT	BASE YEAR COUNT	OPENING YEAR FORECAST	PEAK - DAILY RELATIONSHIP
NORTH	LEFT	**43**	**60**	NORTH LEG	NORTH	LEFT	**70**	**105**	NORTH LEG
BOUND	THRU	**298**	**307**	RATIO **10.0%**	BOUND	THRU	**147**	**195**	RATIO **8.5%**
	RIGHT	**1**	**2**	ADT 9,300		RIGHT	**0**	**0**	ADT 9,300
SOUTH	LEFT	**2**	**3**	SOUTH LEG	SOUTH	LEFT	**0**	**0**	SOUTH LEG
BOUND	THRU	**153**	**194**	RATIO **11.1%**	BOUND	THRU	**223**	**245**	RATIO **9.6%**
	RIGHT	**171**	**177**	ADT 6,400		RIGHT	**212**	**215**	ADT 6,400
EAST	LEFT	**226**	**248**	EAST LEG	EAST	LEFT	**129**	**133**	EAST LEG
BOUND	THRU	**0**	**0**	RATIO **#DIV/0!**	BOUND	THRU	**0**	**0**	RATIO **#DIV/0!**
	RIGHT	**68**	**146**	ADT 0		RIGHT	**54**	**65**	ADT 0
WEST	LEFT	**0**	**0**	WEST LEG	WEST	LEFT	**2**	**3**	WEST LEG
BOUND	THRU	**0**	**0**	RATIO **11.3%**	BOUND	THRU	**0**	**0**	RATIO **9.2%**
	RIGHT	**0**	**0**	ADT 5,600		RIGHT	**0**	**0**	ADT 5,600

CAMPUS STREET (NS) / PROSPECT AVENUE (EW)

MORNING PEAK HOUR

EXISTING PEAK HOUR TURNING MOVEMENT VOLUMES (AUTOS):

2011

35 151 0
< v >
9 ^ ^ 0
0 > < 0
41 v v 0
< ^ >
172 396 0

EXISTING PEAK HOUR COUNT YEAR (AUTOS):

2011

186 405
v ^
207 < IN = 804 < 0
50 > OUT = 804 > 0
v ^
192 568

EXISTING PEAK HOUR TURNING MOVEMENT VOLUMES (TRUCKS IN PCE'S):

0 6 5
< v >
0 ^ ^ 0
0 > < 0
3 v v 0
< ^ >
PCE FACTORS BY AXLE:
2: 1.5 3: 2.0 4+: 3.0 0 9 0

TOTAL EXISTING PEAK HOUR TURNING MOVEMENT VOLUMES (PCES):

2011

35 157 5
< v >
9 ^ ^ 0
0 > < 0
44 v v 0
< ^ >
172 405 0

EXISTING PEAK PERIOD MODEL YEAR (AUTO):

2000

262 82
v ^
0 < IN = 344 < 0
0 > OUT = 344 > 0
v ^
262 82

EXISTING PEAK PERIOD MODEL YEAR (TRUCKS IN PCE'S):

1994

5 2
v ^
0 < IN = 7 < 0
0 > OUT = 7 > 0
v ^
5 2

EXISTING PEAK HOUR MODEL YEAR (PCE'S):

PHF FOR CARS: 0.38
PHF FOR TRUCKS: 0.333

101 32
v ^
0 < IN = 133 < 0
0 > OUT = 133 > 0
v ^
101 32

FUTURE PEAK PERIOD MODEL YEAR (AUTO):

2030

757 90
v ^
0 < IN = 847 < 0
0 > OUT = 847 > 0
v ^
757 90

FUTURE PEAK PERIOD MODEL YEAR (TRUCKS IN PCE'S):

2020

27 67
v ^
0 < IN = 94 < 0
0 > OUT = 94 > 0
v ^
27 67

FUTURE PEAK HOUR MODEL YEAR (PCE'S):

PHF FOR CARS: 0.38
PHF FOR TRUCKS: 0.333

297 57
v ^
0 < IN = 353 < 0
0 > OUT = 353 > 0
v ^
297 57

RAW GROWTH (PCE'S): 2000 TO 2030
CONVERSION OF TRUCKS TO: 2025
FACTOR = 1.25

197 30
v ^
0 < < 0
0 > > 0
v ^
197 30

ADJUSTED GROWTH (PCE'S): 2000 TO 2030
10 MINIMUM GROWTH %

200 40
v ^
20 < IN = 240 < 0
10 > OUT = 260 > 0
v ^
200 30

OPENING YEAR GROWTH: 2011 TO 2023
12 YEARS

80 20
v ^
10 < < 0
0 > > 0
v ^
80 10

INITIAL OPENING YEAR VOLUMES:

2023

280 430
v ^
220 < IN = 920 < 0
50 > OUT = 940 > 10
v ^
280 590

BALANCED OPENING YEAR VOLUMES:

2023

290 430
v ^
220 < IN = 940 < 0
50 > OUT = 940 > 10
v ^
280 600

EVENING PEAK HOUR

EXISTING PEAK HOUR TURNING MOVEMENT VOLUMES (AUTOS):

2011

22 249 0
< v >
9 ^ ^ 0
0 > < 0
136 v v 0
< ^ >
24 138 0

EXISTING PEAK HOUR COUNT YEAR (AUTOS):

2011

271 147
v ^
46 < IN = 578 < 0
145 > OUT = 578 > 0
v ^
385 162

EXISTING PEAK HOUR TURNING MOVEMENT VOLUMES (TRUCKS IN PCE'S):

0 20 0
< v >
0 ^ ^ 0
0 > < 0
0 v v 0
< ^ >
PCE FACTORS BY AXLE:
2: 1.5 3: 2 4+: 3.0 0 38 2

TOTAL EXISTING PEAK HOUR TURNING MOVEMENT VOLUMES (PCES):

2011

22 269 0
< v >
9 ^ ^ 0
0 > < 0
136 v v 0
< ^ >
24 176 2

EXISTING PEAK PERIOD MODEL YEAR (AUTO):

2000

229 254
v ^
0 < IN = 483 < 0
0 > OUT = 483 > 0
v ^
229 254

EXISTING PEAK PERIOD MODEL YEAR (TRUCKS IN PCE'S):

1994

11 0
v ^
0 < IN = 11 < 0
0 > OUT = 11 > 0
v ^
11 0

EXISTING PEAK HOUR MODEL YEAR (PCE'S):

PHF FOR CARS: 0.28
PHF FOR TRUCKS: 0.25

67 71
v ^
0 < IN = 138 < 0
0 > OUT = 138 > 0
v ^
67 71

FUTURE PEAK PERIOD MODEL YEAR (AUTO):

2030

225 811
v ^
0 < IN = 1036 < 0
0 > OUT = 1036 > 0
v ^
225 811

FUTURE PEAK PERIOD MODEL YEAR (TRUCKS IN PCE'S):

2020

48 56
v ^
0 < IN = 104 < 0
0 > OUT = 104 > 0
v ^
48 56

FUTURE PEAK HOUR MODEL YEAR (PCE'S):

PHF FOR CARS: 0.28
PHF FOR TRUCKS: 0.25

75 241
v ^
0 < IN = 316 < 0
0 > OUT = 316 > 0
v ^
75 241

RAW GROWTH (PCE'S): 2000 TO 2030
CONVERSION OF TRUCKS TO: 2025
FACTOR = 1.25

10 173
v ^
0 < < 0
0 > > 0
v ^
10 173

ADJUSTED GROWTH (PCE'S): 2000 TO 2030
10 MINIMUM GROWTH %

30 170
v ^
0 < IN = 210 < 0
10 > OUT = 180 > 0
v ^
10 170

OPENING YEAR GROWTH: 2011 TO 2023
12 YEARS

10 70
v ^
0 < < 0
0 > > 0
v ^
0 70

INITIAL OPENING YEAR VOLUMES:

2023

300 260
v ^
50 < IN = 720 < 0
150 > OUT = 720 > 0
v ^
410 270

BALANCED OPENING YEAR VOLUMES:

2023

300 260
v ^
50 < IN = 720 < 0
150 > OUT = 720 > 0
v ^
410 270

CAMPUS STREET (NS) / PROSPECT AVENUE (EW)

FUTURE DIRECTIONAL TURN VOLUMES FROM FUTURE DIRECTIONAL LINK VOLUMES

NCHRP 255

OPENING YEAR (2023) TRAFFIC CONDITIONS									
MORNING PEAK HOUR INPUT DATA					EVENING PEAK HOUR INPUT DATA				
APPROACH	TURNING MOVEMENT	BASE YEAR COUNT	APPROACH	OPENING YEAR TOTAL	APPROACH	TURNING MOVEMENT	BASE YEAR COUNT	APPROACH	OPENING YEAR TOTAL
NORTH	LEFT	**172**	SOUTH LEG		NORTH	LEFT	**24**	SOUTH LEG	
BOUND	THRU	**405**	IN ...	**600**	BOUND	THRU	**176**	IN ...	**270**
	RIGHT	**0**	OUT ...	**280**		RIGHT	**2**	OUT ...	**410**
SOUTH	LEFT	**5**	NORTH LEG		SOUTH	LEFT	**0**	NORTH LEG	
BOUND	THRU	**157**	IN ...	**290**	BOUND	THRU	**269**	IN ...	**300**
	RIGHT	**35**	OUT ...	**430**		RIGHT	**22**	OUT ...	**260**
EAST	LEFT	**9**	WEST LEG		EAST	LEFT	**9**	WEST LEG	
BOUND	THRU	**0**	IN ...	**50**	BOUND	THRU	**0**	IN ...	**150**
	RIGHT	**44**	OUT ...	**220**		RIGHT	**136**	OUT ...	**50**
WEST	LEFT	**0**	EAST LEG		WEST	LEFT	**0**	EAST LEG	
BOUND	THRU	**0**	IN ...	**0**	BOUND	THRU	**0**	IN ...	**0**
	RIGHT	**0**	OUT ...	**10**		RIGHT	**0**	OUT ...	**0**

OPENING YEAR (2023) TRAFFIC CONDITIONS									
MORNING PEAK HOUR RESULTS					EVENING PEAK HOUR RESULTS				
APPROACH	TURNING MOVEMENT	BASE YEAR COUNT	OPENING YEAR FORECAST	PEAK - DAILY RELATIONSHIP	APPROACH	TURNING MOVEMENT	BASE YEAR COUNT	OPENING YEAR FORECAST	PEAK - DAILY RELATIONSHIP
NORTH	LEFT	**172**	**176**	NORTH LEG	NORTH	LEFT	**24**	**26**	NORTH LEG
BOUND	THRU	**405**	**422**	RATIO **11.9%**	BOUND	THRU	**176**	**248**	RATIO **9.1%**
	RIGHT	**0**	**0**	ADT 6,100		RIGHT	**2**	**3**	ADT 6,100
SOUTH	LEFT	**5**	**10**	SOUTH LEG	SOUTH	LEFT	**0**	**0**	SOUTH LEG
BOUND	THRU	**157**	**237**	RATIO **9.0%**	BOUND	THRU	**269**	**274**	RATIO **7.0%**
	RIGHT	**35**	**44**	ADT 9,800		RIGHT	**22**	**24**	ADT 9,800
EAST	LEFT	**9**	**10**	EAST LEG	EAST	LEFT	**9**	**12**	EAST LEG
BOUND	THRU	**0**	**0**	RATIO **#DIV/0!**	BOUND	THRU	**0**	**0**	RATIO **#DIV/0!**
	RIGHT	**44**	**46**	ADT 0		RIGHT	**136**	**136**	ADT 0
WEST	LEFT	**0**	**0**	WEST LEG	WEST	LEFT	**0**	**0**	WEST LEG
BOUND	THRU	**0**	**0**	RATIO **12.0%**	BOUND	THRU	**0**	**0**	RATIO **8.6%**
	RIGHT	**0**	**0**	ADT 2,300		RIGHT	**0**	**0**	ADT 2,300

CAMPUS STREET (NS) / SAN JUAN STREET (EW)

MORNING PEAK HOUR

EXISTING PEAK HOUR TURNING MOVEMENT VOLUMES (AUTOS):
2011

```
                    6   142    0
                 <     v     >
          3 ^                   ^   0
          0 >                   <   0
         14 v                   v   0
                 <     ^     >
                   45   727    0
```

EXISTING PEAK HOUR COUNT YEAR (AUTOS):
2011

```
                  148   730
                   v     ^
     51 <     IN =     937 <   0
     17 >    OUT =     937 >   0
                   v     ^
                  156   772
```

EXISTING PEAK HOUR TURNING MOVEMENT VOLUMES (TRUCKS IN PCE'S):

```
                    0    18    0
                 <     v     >
          0 ^                   ^   0
          0 >                   <   0
          0 v                   v   0
                 <     ^     >
```

PCE FACTORS BY AXLE:
2: 1.5 3: 2.0 4+: 3.0

```
                    2    30    0
```

TOTAL EXISTING PEAK HOUR TURNING MOVEMENT VOLUMES (PCES):
2011

```
                    6   160    0
                 <     v     >
          3 ^                   ^   0
          0 >                   <   0
         14 v                   v   0
                 <     ^     >
                   47   757    0
```

EXISTING PEAK PERIOD MODEL YEAR (AUTO):
2000

```
                   60    82
                   v     ^
      0 <     IN =     142 <   0
      0 >    OUT =     142 >   0
                   v     ^
                   60    82
```

EXISTING PEAK PERIOD MODEL YEAR (TRUCKS IN PCE'S):
1994

```
                    0     0
                   v     ^
      0 <     IN =       0 <   0
      0 >    OUT =       0 >   0
                   v     ^
                    0     0
```

EXISTING PEAK HOUR MODEL YEAR (PCE'S):
PHF FOR CARS: 0.38
PHF FOR TRUCKS: 0.333

```
                   23    31
                   v     ^
      0 <     IN =      54 <   0
      0 >    OUT =      54 >   0
                   v     ^
                   23    31
```

FUTURE PEAK PERIOD MODEL YEAR (AUTO):
2030

```
                   82  1245
                   v     ^
     69 <     IN =    2349 <   0
   2197 >    OUT =    2350 >   0
                   v     ^
                 1036    70
```

FUTURE PEAK PERIOD MODEL YEAR (TRUCKS IN PCE'S):
2020

```
                   27    67
                   v     ^
      0 <     IN =      94 <   0
      0 >    OUT =      94 >   0
                   v     ^
                   27    67
```

FUTURE PEAK HOUR MODEL YEAR (PCE'S):
PHF FOR CARS: 0.38
PHF FOR TRUCKS: 0.333

```
                   40   495
                   v     ^
     26 <     IN =     924 <   0
    835 >    OUT =     924 >   0
                   v     ^
                  403    49
```

RAW GROWTH (PCE'S): 2000 TO 2030
CONVERSION OF TRUCKS TO: 2025
FACTOR = 1.25

```
                   20   470
                   v     ^
     26 <                 <   0
    835 >                 >   0
                   v     ^
                  382    23
```

ADJUSTED GROWTH (PCE'S): 2000 TO 2030
10 MINIMUM GROWTH %

```
                   20   470
                   v     ^
     30 <     IN =     870 <   0
    830 >    OUT =     880 >   0
                   v     ^
                  380    20
```

OPENING YEAR GROWTH: 2011 TO 2023
12 YEARS

```
                   10   190
                   v     ^
     10 <                 <   0
    330 >                 >   0
                   v     ^
                  150    10
```

INITIAL OPENING YEAR VOLUMES:
2023

```
                  180   950
                   v     ^
     60 <     IN =    1340 <   0
    350 >    OUT =    1330 >   0
                   v     ^
                  320   810
```

BALANCED OPENING YEAR VOLUMES:
2023

```
                  180   960
                   v     ^
     60 <     IN =    1340 <   0
    350 >    OUT =    1340 >   0
                   v     ^
                  320   810
```

EVENING PEAK HOUR

EXISTING PEAK HOUR TURNING MOVEMENT VOLUMES (AUTOS):
2011

```
                    5   513    0
                 <     v     >
          1 ^                   ^   0
          0 >                   <   0
         13 v                   v   0
                 <     ^     >
                   19   198    0
```

EXISTING PEAK HOUR COUNT YEAR (AUTOS):
2011

```
                  518   199
                   v     ^
     24 <     IN =     749 <   0
     14 >    OUT =     749 >   0
                   v     ^
                  526   217
```

EXISTING PEAK HOUR TURNING MOVEMENT VOLUMES (TRUCKS IN PCE'S):

```
                    0    57    0
                 <     v     >
          0 ^                   ^   0
          0 >                   <   0
          0 v                   v   0
                 <     ^     >
```

PCE FACTORS BY AXLE:
2: 1.5 3: 2 4+: 3.0

```
                    0    39    0
```

TOTAL EXISTING PEAK HOUR TURNING MOVEMENT VOLUMES (PCES):
2011

```
                    5   570    0
                 <     v     >
          1 ^                   ^   0
          0 >                   <   0
         13 v                   v   0
                 <     ^     >
                   19   237    0
```

EXISTING PEAK PERIOD MODEL YEAR (AUTO):
2000

```
                  211   140
                   v     ^
      0 <     IN =     351 <   0
      0 >    OUT =     351 >   0
                   v     ^
                  211   140
```

EXISTING PEAK PERIOD MODEL YEAR (TRUCKS IN PCE'S):
1994

```
                    0     0
                   v     ^
      0 <     IN =       0 <   0
      0 >    OUT =       0 >   0
                   v     ^
                    0     0
```

EXISTING PEAK HOUR MODEL YEAR (PCE'S):
PHF FOR CARS: 0.28
PHF FOR TRUCKS: 0.25

```
                   59    39
                   v     ^
      0 <     IN =      98 <   0
      0 >    OUT =      98 >   0
                   v     ^
                   59    39
```

FUTURE PEAK PERIOD MODEL YEAR (AUTO):
2030

```
                 1638   197
                   v     ^
   3338 <     IN =    4277 <   0
    824 >    OUT =    4278 >   0
                   v     ^
                  743  1815
```

FUTURE PEAK PERIOD MODEL YEAR (TRUCKS IN PCE'S):
2020

```
                   48    56
                   v     ^
      0 <     IN =     104 <   0
      0 >    OUT =     104 >   0
                   v     ^
                   48    56
```

FUTURE PEAK HOUR MODEL YEAR (PCE'S):
PHF FOR CARS: 0.28
PHF FOR TRUCKS: 0.25

```
                  471    69
                   v     ^
    935 <     IN =    1224 <   0
    231 >    OUT =    1224 >   0
                   v     ^
                  220   522
```

RAW GROWTH (PCE'S): 2000 TO 2030
CONVERSION OF TRUCKS TO: 2025
FACTOR = 1.25

```
                  415    33
                   v     ^
    935 <                 <   0
    231 >                 >   0
                   v     ^
                  164   487
```

ADJUSTED GROWTH (PCE'S): 2000 TO 2030
10 MINIMUM GROWTH %

```
                  410    30
                   v     ^
    930 <     IN =    1130 <   0
    230 >    OUT =    1120 >   0
                   v     ^
                  160   490
```

OPENING YEAR GROWTH: 2011 TO 2023
12 YEARS

```
                  160    10
                   v     ^
    370 <                 <   0
     90 >                 >   0
                   v     ^
                   60   200
```

INITIAL OPENING YEAR VOLUMES:
2023

```
                  740   250
                   v     ^
    390 <     IN =    1300 <   0
    100 >    OUT =    1280 >   0
                   v     ^
                  640   460
```

BALANCED OPENING YEAR VOLUMES:
2023

```
                  740   250
                   v     ^
    400 <     IN =    1300 <   0
    100 >    OUT =    1300 >   0
                   v     ^
                  650   460
```

CAMPUS STREET (NS) / SAN JUAN STREET (EW)

FUTURE DIRECTIONAL TURN VOLUMES FROM FUTURE DIRECTIONAL LINK VOLUMES

NCHRP 255

OPENING YEAR (2023) TRAFFIC CONDITIONS									
MORNING PEAK HOUR INPUT DATA					EVENING PEAK HOUR INPUT DATA				
APPROACH	TURNING MOVEMENT	BASE YEAR COUNT	APPROACH	OPENING YEAR TOTAL	APPROACH	TURNING MOVEMENT	BASE YEAR COUNT	APPROACH	OPENING YEAR TOTAL
NORTH	LEFT	**47**	SOUTH LEG		NORTH	LEFT	**19**	SOUTH LEG	
BOUND	THRU	**757**	IN ...	**810**	BOUND	THRU	**237**	IN ...	**460**
	RIGHT	**0**	OUT ...	**320**		RIGHT	**0**	OUT ...	**650**
SOUTH	LEFT	**0**	NORTH LEG		SOUTH	LEFT	**0**	NORTH LEG	
BOUND	THRU	**160**	IN ...	**180**	BOUND	THRU	**570**	IN ...	**740**
	RIGHT	**6**	OUT ...	**960**		RIGHT	**5**	OUT ...	**250**
EAST	LEFT	**3**	WEST LEG		EAST	LEFT	**1**	WEST LEG	
BOUND	THRU	**0**	IN ...	**350**	BOUND	THRU	**0**	IN ...	**100**
	RIGHT	**14**	OUT ...	**60**		RIGHT	**13**	OUT ...	**400**
WEST	LEFT	**0**	EAST LEG		WEST	LEFT	**0**	EAST LEG	
BOUND	THRU	**0**	IN ...	**0**	BOUND	THRU	**0**	IN ...	**0**
	RIGHT	**0**	OUT ...	**0**		RIGHT	**0**	OUT ...	**0**

OPENING YEAR (2023) TRAFFIC CONDITIONS									
MORNING PEAK HOUR RESULTS					EVENING PEAK HOUR RESULTS				
APPROACH	TURNING MOVEMENT	BASE YEAR COUNT	OPENING YEAR FORECAST	PEAK - DAILY RELATIONSHIP	APPROACH	TURNING MOVEMENT	BASE YEAR COUNT	OPENING YEAR FORECAST	PEAK - DAILY RELATIONSHIP
NORTH	LEFT	**47**	**49**	NORTH LEG	NORTH	LEFT	**19**	**240**	NORTH LEG
BOUND	THRU	**757**	**780**	RATIO **11.7%**	BOUND	THRU	**237**	**245**	RATIO **10.3%**
	RIGHT	**0**	**0**	ADT 9,800		RIGHT	**0**	**0**	ADT 9,800
SOUTH	LEFT	**0**	**0**	SOUTH LEG	SOUTH	LEFT	**0**	**0**	SOUTH LEG
BOUND	THRU	**160**	**165**	RATIO **8.5%**	BOUND	THRU	**570**	**588**	RATIO **8.5%**
	RIGHT	**6**	**22**	ADT 13,600		RIGHT	**5**	**160**	ADT 13,600
EAST	LEFT	**3**	**180**	EAST LEG	EAST	LEFT	**1**	**16**	EAST LEG
BOUND	THRU	**0**	**0**	RATIO **#DIV/0!**	BOUND	THRU	**0**	**0**	RATIO **#DIV/0!**
	RIGHT	**14**	**167**	ADT 0		RIGHT	**13**	**82**	ADT 0
WEST	LEFT	**0**	**0**	WEST LEG	WEST	LEFT	**0**	**0**	WEST LEG
BOUND	THRU	**0**	**0**	RATIO **8.7%**	BOUND	THRU	**0**	**0**	RATIO **10.4%**
	RIGHT	**0**	**0**	ADT 4,800		RIGHT	**0**	**0**	ADT 4,800

CAMPUS STREET (NS) / BARTON ROAD (EW)

MORNING PEAK HOUR

EXISTING PEAK HOUR TURNING MOVEMENT VOLUMES (AUTOS):

2011

			60	19	114	
			<	v	>	
178	^				^	420
970	>				<	463
22	v				v	9
			<	^	>	
			99	125	9	

EXISTING PEAK HOUR COUNT YEAR (AUTOS):

2011

				193	723	
				v	^	
622	<		IN =		2488 <	892
1170	>		OUT =		2488 >	1093
				v	^	
				50	233	

EXISTING PEAK HOUR TURNING MOVEMENT VOLUMES (TRUCKS IN PCE'S):

			2	0	12	
			<	v	>	
5	^				^	8
30	>				<	16
0	v				v	2
			<	^	>	

PCE FACTORS BY AXLE:

2: 1.5 3: 2.0 4+: 3.0

			2	0	0	

TOTAL EXISTING PEAK HOUR TURNING MOVEMENT VOLUMES (PCES):

2011

			62	19	126	
			<	v	>	
183	^				^	428
1000	>				<	479
22	v				v	11
			<	^	>	
			101	125	9	

EXISTING PEAK PERIOD MODEL YEAR (AUTO):

2000

				60	82	
				v	^	
1895	<		IN =		3156 <	1977
1119	>		OUT =		3156 >	1179
				v	^	
				0	0	

EXISTING PEAK PERIOD MODEL YEAR (TRUCKS IN PCE'S):

1994

				0	0	
				v	^	
107	<		IN =		220 <	107
113	>		OUT =		220 >	113
				v	^	
				0	0	

EXISTING PEAK HOUR MODEL YEAR (PCE'S):

PHF FOR CARS: 0.38

PHF FOR TRUCKS: 0.333

				23	31	
				v	^	
756	<		IN =		1273 <	787
463	>		OUT =		1273 >	486
				v	^	
				0	0	

FUTURE PEAK PERIOD MODEL YEAR (AUTO):

2030

				1036	70	
				v	^	
2511	<		IN =		7317 <	1823
3700	>		OUT =		7317 >	3552
				v	^	
				1184	758	

FUTURE PEAK PERIOD MODEL YEAR (TRUCKS IN PCE'S):

2020

				27	67	
				v	^	
96	<		IN =		265 <	159
79	>		OUT =		269 >	106
				v	^	
				0	0	

FUTURE PEAK HOUR MODEL YEAR (PCE'S):

PHF FOR CARS: 0.38

PHF FOR TRUCKS: 0.333

				403	49	
				v	^	
986	<		IN =		2869 <	746
1432	>		OUT =		2870 >	1385
				v	^	
				450	288	

RAW GROWTH (PCE'S): 2000 TO 2030

CONVERSION OF TRUCKS TO: 2025

FACTOR = 1.25

				382	23	
				v	^	
230	<				<	-37
967	>				>	899
				v	^	
				450	288	

ADJUSTED GROWTH (PCE'S): 2000 TO 2030

10 MINIMUM GROWTH %

				380	70	
				v	^	
230	<		IN =		1730 <	90
970	>		OUT =		1650 >	900
				v	^	
				450	290	

OPENING YEAR GROWTH: 2011 TO 2023

12 YEARS

				150	30	
				v	^	
90	<				<	40
390	>				>	360
				v	^	
				180	120	

INITIAL OPENING YEAR VOLUMES:

2023

				360	770	
				v	^	
730	<		IN =		3280 <	960
1600	>		OUT =		3230 >	1500
				v	^	
				230	360	

BALANCED OPENING YEAR VOLUMES:

2023

				360	780	
				v	^	
740	<		IN =		3280 <	960
1600	>		OUT =		3270 >	1520
				v	^	
				230	360	

EVENING PEAK HOUR

EXISTING PEAK HOUR TURNING MOVEMENT VOLUMES (AUTOS):

2011

			118	66	346	
			<	v	>	
49	^				^	138
585	>				<	1053
43	v				v	23
			<	^	>	
			59	22	11	

EXISTING PEAK HOUR COUNT YEAR (AUTOS):

2011

				530	209	
				v	^	
1230	<		IN =		2513 <	1214
677	>		OUT =		2513 >	942
				v	^	
				132	92	

EXISTING PEAK HOUR TURNING MOVEMENT VOLUMES (TRUCKS IN PCE'S):

			0	0	9	
			<	v	>	
6	^				^	6
11	>				<	11
0	v				v	0
			<	^	>	

PCE FACTORS BY AXLE:

2: 1.5 3: 2 4+: 3.0

			0	0	0	

TOTAL EXISTING PEAK HOUR TURNING MOVEMENT VOLUMES (PCES):

2011

			118	66	355	
			<	v	>	
55	^				^	144
596	>				<	1064
43	v				v	23
			<	^	>	
			59	22	11	

EXISTING PEAK PERIOD MODEL YEAR (AUTO):

2000

				211	140	
				v	^	
2180	<		IN =		5744 <	2227
3306	>		OUT =		5744 >	3424
				v	^	
				0	0	

EXISTING PEAK PERIOD MODEL YEAR (TRUCKS IN PCE'S):

1994

				0	0	
				v	^	
47	<		IN =		184 <	47
137	>		OUT =		184 >	137
				v	^	
				0	0	

EXISTING PEAK HOUR MODEL YEAR (PCE'S):

PHF FOR CARS: 0.28

PHF FOR TRUCKS: 0.25

				59	39	
				v	^	
622	<		IN =		1654 <	635
960	>		OUT =		1654 >	993
				v	^	
				0	0	

FUTURE PEAK PERIOD MODEL YEAR (AUTO):

2030

				743	1815	
				v	^	
4549	<		IN =		11065 <	4909
3958	>		OUT =		11064 >	3271
				v	^	
				1429	1455	

FUTURE PEAK PERIOD MODEL YEAR (TRUCKS IN PCE'S):

2020

				48	56	
				v	^	
251	<		IN =		621 <	306
267	>		OUT =		623 >	316
				v	^	
				0	0	

FUTURE PEAK HOUR MODEL YEAR (PCE'S):

PHF FOR CARS: 0.28

PHF FOR TRUCKS: 0.25

				220	522	
				v	^	
1336	<		IN =		3253 <	1451
1175	>		OUT =		3254 >	995
				v	^	
				400	407	

RAW GROWTH (PCE'S): 2000 TO 2030

CONVERSION OF TRUCKS TO: 2025

FACTOR = 1.25

				164	487	
				v	^	
727	<				<	832
223	>				>	13
				v	^	
				400	407	

ADJUSTED GROWTH (PCE'S): 2000 TO 2030

10 MINIMUM GROWTH %

				160	490	
				v	^	
730	<		IN =		1620 <	830
220	>		OUT =		1720 >	100
				v	^	
				400	410	

OPENING YEAR GROWTH: 2011 TO 2023

12 YEARS

				60	200	
				v	^	
290	<				<	330
90	>				>	40
				v	^	
				160	160	

INITIAL OPENING YEAR VOLUMES:

2023

				600	420	
				v	^	
1530	<		IN =		3190 <	1560
780	>		OUT =		3240 >	1000
				v	^	
				290	250	

BALANCED OPENING YEAR VOLUMES:

2023

				610	420	
				v	^	
1530	<		IN =		3230 <	1580
790	>		OUT =		3240 >	1000
				v	^	
				290	250	

CAMPUS STREET (NS) / BARTON ROAD (EW)

FUTURE DIRECTIONAL TURN VOLUMES FROM FUTURE DIRECTIONAL LINK VOLUMES

NCHRP 255

OPENING YEAR (2023) TRAFFIC CONDITIONS									
MORNING PEAK HOUR INPUT DATA					EVENING PEAK HOUR INPUT DATA				
APPROACH	TURNING MOVEMENT	BASE YEAR COUNT	APPROACH	OPENING YEAR TOTAL	APPROACH	TURNING MOVEMENT	BASE YEAR COUNT	APPROACH	OPENING YEAR TOTAL
NORTH	LEFT	**101**	SOUTH LEG		NORTH	LEFT	**59**	SOUTH LEG	
BOUND	THRU	**125**	IN ...	**360**	BOUND	THRU	**22**	IN ...	**250**
	RIGHT	**9**	OUT ...	**230**		RIGHT	**11**	OUT ...	**290**
SOUTH	LEFT	**126**	NORTH LEG		SOUTH	LEFT	**355**	NORTH LEG	
BOUND	THRU	**19**	IN ...	**360**	BOUND	THRU	**66**	IN ...	**610**
	RIGHT	**62**	OUT ...	**780**		RIGHT	**118**	OUT ...	**420**
EAST	LEFT	**183**	WEST LEG		EAST	LEFT	**55**	WEST LEG	
BOUND	THRU	**1,000**	IN ...	**1,600**	BOUND	THRU	**596**	IN ...	**790**
	RIGHT	**22**	OUT ...	**740**		RIGHT	**43**	OUT ...	**1,530**
WEST	LEFT	**11**	EAST LEG		WEST	LEFT	**23**	EAST LEG	
BOUND	THRU	**479**	IN ...	**960**	BOUND	THRU	**1,064**	IN ...	**1,580**
	RIGHT	**428**	OUT ...	**1,520**		RIGHT	**144**	OUT ...	**1,000**

OPENING YEAR (2023) TRAFFIC CONDITIONS									
MORNING PEAK HOUR RESULTS					EVENING PEAK HOUR RESULTS				
APPROACH	TURNING MOVEMENT	BASE YEAR COUNT	OPENING YEAR FORECAST	PEAK - DAILY RELATIONSHIP	APPROACH	TURNING MOVEMENT	BASE YEAR COUNT	OPENING YEAR FORECAST	PEAK - DAILY RELATIONSHIP
NORTH	LEFT	**101**	**160**	NORTH LEG	NORTH	LEFT	**59**	**144**	NORTH LEG
BOUND	THRU	**125**	**181**	RATIO **8.6%**	BOUND	THRU	**22**	**80**	RATIO **7.6%**
	RIGHT	**9**	**17**	ADT 13,600		RIGHT	**11**	**27**	ADT 13,600
SOUTH	LEFT	**126**	**188**	SOUTH LEG	SOUTH	LEFT	**355**	**357**	SOUTH LEG
BOUND	THRU	**19**	**92**	RATIO **21.8%**	BOUND	THRU	**66**	**139**	RATIO **20.0%**
	RIGHT	**62**	**79**	ADT 2,700		RIGHT	**118**	**122**	ADT 2,700
EAST	LEFT	**183**	**189**	EAST LEG	EAST	LEFT	**55**	**84**	EAST LEG
BOUND	THRU	**1,000**	**1,316**	RATIO **8.6%**	BOUND	THRU	**596**	**616**	RATIO **8.9%**
	RIGHT	**22**	**94**	ADT 29,100		RIGHT	**43**	**93**	ADT 29,100
WEST	LEFT	**11**	**44**	WEST LEG	WEST	LEFT	**23**	**58**	WEST LEG
BOUND	THRU	**479**	**501**	RATIO **8.7%**	BOUND	THRU	**1,064**	**1,269**	RATIO **8.6%**
	RIGHT	**428**	**441**	ADT 27,000		RIGHT	**144**	**256**	ADT 27,000

PARKLAND STREET (NS) / STEWART STREET (EW)

MORNING PEAK HOUR

EXISTING PEAK HOUR TURNING MOVEMENT VOLUMES (AUTOS):
2011

```
                    12    0    5
                 <     v     >
          32 ^                  ^    7
         222 >                  <  184
           0 v                  v    0
                 <     ^     >
                  0    0    0
```

EXISTING PEAK HOUR COUNT YEAR (AUTOS):
2011

```
                    17   39
                     v    ^
     196 <     IN =   462 <  191
     254 >    OUT =   462 >  227
                     v    ^
                     0    0
```

EXISTING PEAK HOUR TURNING MOVEMENT VOLUMES (TRUCKS IN PCE'S):

```
                     3    0    0
                 <     v     >
           0 ^                  ^    3
           8 >                  <   11
           0 v                  v    0
PCE FACTORS BY AXLE:     <     ^     >
2:    1.5    3:    2.0    4+:    3.0    0    0    0
```

TOTAL EXISTING PEAK HOUR TURNING MOVEMENT VOLUMES (PCES):
2011

```
                    15    0    5
                 <     v     >
          32 ^                  ^   10
         230 >                  <  195
           0 v                  v    0
                 <     ^     >
                  0    0    0
```

EXISTING PEAK PERIOD MODEL YEAR (AUTO):
2000

```
                     0    0
                     v    ^
     360 <     IN =   655 <  360
     295 >    OUT =   655 >  295
                     v    ^
                     0    0
```

EXISTING PEAK PERIOD MODEL YEAR (TRUCKS IN PCE'S):
1994

```
                     0    0
                     v    ^
      38 <     IN =    68 <   38
      30 >    OUT =    68 >   30
                     v    ^
                     0    0
```

EXISTING PEAK HOUR MODEL YEAR (PCE'S):
PHF FOR CARS: 0.38
PHF FOR TRUCKS: 0.333

```
                     0    0
                     v    ^
     149 <     IN =   272 <  149
     122 >    OUT =   272 >  122
                     v    ^
                     0    0
```

FUTURE PEAK PERIOD MODEL YEAR (AUTO):
2030

```
                     0    0
                     v    ^
     374 <     IN =  1654 <  374
    1280 >    OUT =  1654 > 1280
                     v    ^
                     0    0
```

FUTURE PEAK PERIOD MODEL YEAR (TRUCKS IN PCE'S):
2020

```
                     0    0
                     v    ^
      99 <     IN =   158 <   99
      59 >    OUT =   158 >   59
                     v    ^
                     0    0
```

FUTURE PEAK HOUR MODEL YEAR (PCE'S).
PHF FOR CARS: 0.38
PHF FOR TRUCKS: 0.333

```
                     0    0
                     v    ^
     175 <     IN =   681 <  175
     506 >    OUT =   681 >  506
                     v    ^
                     0    0
```

RAW GROWTH (PCE'S): 2000 TO 2030
CONVERSION OF TRUCKS TO: 2025
FACTOR = 1.25

```
                     0    0
                     v    ^
      31 <                <   31
     386 >                >  386
                     v    ^
                     0    0
```

ADJUSTED GROWTH (PCE'S): 2000 TO 2030
10 MINIMUM GROWTH %

```
                     0    0
                     v    ^
      30 <     IN =   420 <   30
     390 >    OUT =   420 >  390
                     v    ^
                     0    0
```

OPENING YEAR GROWTH: 2011 TO 2023
12 YEARS

```
                     0    0
                     v    ^
      10 <                <   10
     160 >                >  160
                     v    ^
                     0    0
```

INITIAL OPENING YEAR VOLUMES:
2023

```
                    20   40
                     v    ^
     220 <     IN =   660 <  220
     420 >    OUT =   660 >  400
                     v    ^
                     0    0
```

BALANCED OPENING YEAR VOLUMES:
2023

```
                    20   40
                     v    ^
     220 <     IN =   660 <  220
     420 >    OUT =   660 >  400
                     v    ^
                     0    0
```

EVENING PEAK HOUR

EXISTING PEAK HOUR TURNING MOVEMENT VOLUMES (AUTOS):
2011

```
                    16    0   10
                 <     v     >
           9 ^                  ^    9
         239 >                  <  264
           0 v                  v    0
                 <     ^     >
                  0    0    0
```

EXISTING PEAK HOUR COUNT YEAR (AUTOS):
2011

```
                    26   18
                     v    ^
     280 <     IN =   547 <  273
     248 >    OUT =   547 >  249
                     v    ^
                     0    0
```

EXISTING PEAK HOUR TURNING MOVEMENT VOLUMES (TRUCKS IN PCE'S):

```
                     0    0    2
                 <     v     >
           3 ^                  ^    0
           6 >                  <    2
           0 v                  v    0
PCE FACTORS BY AXLE:     <     ^     >
2:    1.5    3:    2    4+:    3.0    0    0    0
```

TOTAL EXISTING PEAK HOUR TURNING MOVEMENT VOLUMES (PCES):
2011

```
                    16    0   12
                 <     v     >
          12 ^                  ^    9
         245 >                  <  266
           0 v                  v    0
                 <     ^     >
                  0    0    0
```

EXISTING PEAK PERIOD MODEL YEAR (AUTO):
2000

```
                     0    0
                     v    ^
     452 <     IN =  1030 <  452
     578 >    OUT =  1030 >  578
                     v    ^
                     0    0
```

EXISTING PEAK PERIOD MODEL YEAR (TRUCKS IN PCE'S):
1994

```
                     0    0
                     v    ^
      41 <     IN =    70 <   41
      29 >    OUT =    70 >   29
                     v    ^
                     0    0
```

EXISTING PEAK HOUR MODEL YEAR (PCE'S):
PHF FOR CARS: 0.28
PHF FOR TRUCKS: 0.25

```
                     0    0
                     v    ^
     137 <     IN =   306 <  137
     169 >    OUT =   306 >  169
                     v    ^
                     0    0
```

FUTURE PEAK PERIOD MODEL YEAR (AUTO):
2030

```
                     0    0
                     v    ^
    1489 <     IN =  2268 < 1489
     779 >    OUT =  2268 >  779
                     v    ^
                     0    0
```

FUTURE PEAK PERIOD MODEL YEAR (TRUCKS IN PCE'S):
2020

```
                     0    0
                     v    ^
      95 <     IN =   202 <   95
     107 >    OUT =   202 >  107
                     v    ^
                     0    0
```

FUTURE PEAK HOUR MODEL YEAR (PCE'S):
PHF FOR CARS: 0.28
PHF FOR TRUCKS: 0.25

```
                     0    0
                     v    ^
     441 <     IN =   686 <  441
     245 >    OUT =   686 >  245
                     v    ^
                     0    0
```

RAW GROWTH (PCE'S): 2000 TO 2030
CONVERSION OF TRUCKS TO: 2025
FACTOR = 1.25

```
                     0    0
                     v    ^
     307 <                <  307
      81 >                >   81
                     v    ^
                     0    0
```

ADJUSTED GROWTH (PCE'S): 2000 TO 2030
10 MINIMUM GROWTH %

```
                     0    0
                     v    ^
     310 <     IN =   390 <  310
      80 >    OUT =   390 >   80
                     v    ^
                     0    0
```

OPENING YEAR GROWTH: 2011 TO 2023
12 YEARS

```
                     0    0
                     v    ^
     120 <                <  120
      30 >                >   30
                     v    ^
                     0    0
```

INITIAL OPENING YEAR VOLUMES:
2023

```
                    30   20
                     v    ^
     400 <     IN =   720 <  400
     290 >    OUT =   710 >  290
                     v    ^
                     0    0
```

BALANCED OPENING YEAR VOLUMES:
2023

```
                    30   20
                     v    ^
     410 <     IN =   720 <  400
     290 >    OUT =   720 >  290
                     v    ^
                     0    0
```

PARKLAND STREET (NS) / STEWART STREET (EW)

FUTURE DIRECTIONAL TURN VOLUMES FROM FUTURE DIRECTIONAL LINK VOLUMES

NCHRP 255

OPENING YEAR (2023) TRAFFIC CONDITIONS									
MORNING PEAK HOUR INPUT DATA					EVENING PEAK HOUR INPUT DATA				
APPROACH	TURNING MOVEMENT	BASE YEAR COUNT	APPROACH	OPENING YEAR TOTAL	APPROACH	TURNING MOVEMENT	BASE YEAR COUNT	APPROACH	OPENING YEAR TOTAL
NORTH	LEFT	**0**	SOUTH LEG		NORTH	LEFT	**0**	SOUTH LEG	
BOUND	THRU	**0**	IN ...	**0**	BOUND	THRU	**0**	IN ...	**0**
	RIGHT	**0**	OUT ...	**0**		RIGHT	**0**	OUT ...	**0**
SOUTH	LEFT	**5**	NORTH LEG		SOUTH	LEFT	**12**	NORTH LEG	
BOUND	THRU	**0**	IN ...	**20**	BOUND	THRU	**0**	IN ...	**30**
	RIGHT	**15**	OUT ...	**40**		RIGHT	**16**	OUT ...	**20**
EAST	LEFT	**32**	WEST LEG		EAST	LEFT	**12**	WEST LEG	
BOUND	THRU	**230**	IN ...	**420**	BOUND	THRU	**245**	IN ...	**290**
	RIGHT	**0**	OUT ...	**220**		RIGHT	**0**	OUT ...	**410**
WEST	LEFT	**0**	EAST LEG		WEST	LEFT	**0**	EAST LEG	
BOUND	THRU	**195**	IN ...	**220**	BOUND	THRU	**266**	IN ...	**400**
	RIGHT	**10**	OUT ...	**400**		RIGHT	**9**	OUT ...	**290**

OPENING YEAR (2023) TRAFFIC CONDITIONS									
MORNING PEAK HOUR RESULTS					EVENING PEAK HOUR RESULTS				
APPROACH	TURNING MOVEMENT	BASE YEAR COUNT	OPENING YEAR FORECAST	PEAK - DAILY RELATIONSHIP	APPROACH	TURNING MOVEMENT	BASE YEAR COUNT	OPENING YEAR FORECAST	PEAK - DAILY RELATIONSHIP
NORTH	LEFT	**0**	**0**	NORTH LEG	NORTH	LEFT	**0**	**0**	NORTH LEG
BOUND	THRU	**0**	**0**	RATIO **11.1%**	BOUND	THRU	**0**	**0**	RATIO **8.7%**
	RIGHT	**0**	**0**	ADT 600		RIGHT	**0**	**0**	ADT 600
SOUTH	LEFT	**5**	**6**	SOUTH LEG	SOUTH	LEFT	**12**	**12**	SOUTH LEG
BOUND	THRU	**0**	**0**	RATIO **#DIV/0!**	BOUND	THRU	**0**	**0**	RATIO **#DIV/0!**
	RIGHT	**15**	**16**	ADT 0		RIGHT	**16**	**18**	ADT 0
EAST	LEFT	**32**	**33**	EAST LEG	EAST	LEFT	**12**	**13**	EAST LEG
BOUND	THRU	**230**	**394**	RATIO **7.5%**	BOUND	THRU	**245**	**278**	RATIO **8.4%**
	RIGHT	**0**	**0**	ADT 8,200		RIGHT	**0**	**0**	ADT 8,200
WEST	LEFT	**0**	**0**	WEST LEG	WEST	LEFT	**0**	**0**	WEST LEG
BOUND	THRU	**195**	**207**	RATIO **6.6%**	BOUND	THRU	**266**	**392**	RATIO **7.2%**
	RIGHT	**10**	**11**	ADT 9,800		RIGHT	**9**	**9**	ADT 9,800

ANDERSON STREET (NS) / STEWART STREET (EW)

MORNING PEAK HOUR

EXISTING PEAK HOUR TURNING MOVEMENT VOLUMES (AUTOS):
2011

518 623 232
< v >
188 ^ ^ 141
64 > < 63
39 v v 16
< ^ >
47 268 27

EXISTING PEAK HOUR COUNT YEAR (AUTOS):
2011

1373 597
v ^
628 < IN = 2226 < 220
291 > OUT = 2226 > 323
v ^
678 342

EXISTING PEAK HOUR TURNING MOVEMENT VOLUMES (TRUCKS IN PCE'S):

8 2 2
< v >
8 ^ ^ 5
2 > < 4
0 v v 6
< ^ >
PCE FACTORS BY AXLE:
2: 1.5 3: 2.0 4+: 3.0
0 9 3

TOTAL EXISTING PEAK HOUR TURNING MOVEMENT VOLUMES (PCES):
2011

526 625 234
< v >
196 ^ ^ 146
66 > < 67
39 v v 22
< ^ >
47 277 30

EXISTING PEAK PERIOD MODEL YEAR (AUTO):
2000

1759 1519
v ^
840 < IN = 3319 < 360
420 > OUT = 3319 > 295
v ^
665 780

EXISTING PEAK PERIOD MODEL YEAR (TRUCKS IN PCE'S):
1994

55 103
v ^
10 < IN = 161 < 38
12 > OUT = 162 > 30
v ^
19 56

EXISTING PEAK HOUR MODEL YEAR (PCE'S):
PHF FOR CARS: 0.38
PHF FOR TRUCKS: 0.333

687 612
v ^
323 < IN = 1315 < 149
164 > OUT = 1315 > 122
v ^
259 315

FUTURE PEAK PERIOD MODEL YEAR (AUTO):
2030

3973 1977
v ^
226 < IN = 6907 < 374
899 > OUT = 6908 > 1770
v ^
2935 1661

FUTURE PEAK PERIOD MODEL YEAR (TRUCKS IN PCE'S):
2020

143 289
v ^
10 < IN = 435 < 99
12 > OUT = 432 > 59
v ^
74 181

FUTURE PEAK HOUR MODEL YEAR (PCE'S):
PHF FOR CARS: 0.38
PHF FOR TRUCKS: 0.333

1557 847
v ^
89 < IN = 2770 < 175
346 > OUT = 2769 > 692
v ^
1140 691

RAW GROWTH (PCE'S): 2000 TO 2030
CONVERSION OF TRUCKS TO: 2025
FACTOR = 1.25

878 251
v ^
-233 < < 31
182 > > 573
v ^
885 387

ADJUSTED GROWTH (PCE'S): 2000 TO 2030
10 MINIMUM GROWTH %

880 250
v ^
60 < IN = 1480 < 30
180 > OUT = 1770 > 570
v ^
890 390

OPENING YEAR GROWTH: 2011 TO 2023
12 YEARS

350 100
v ^
20 < < 10
70 > > 230
v ^
360 160

INITIAL OPENING YEAR VOLUMES:
2023

1740 720
v ^
660 < IN = 2870 < 250
370 > OUT = 2990 > 560
v ^
1050 510

BALANCED OPENING YEAR VOLUMES:
2023

1810 720
v ^
660 < IN = 2990 < 260
390 > OUT = 2990 > 560
v ^
1050 530

EVENING PEAK HOUR

EXISTING PEAK HOUR TURNING MOVEMENT VOLUMES (AUTOS):
2011

222 376 142
< v >
200 ^ ^ 289
116 > < 82
58 v v 18
< ^ >
32 517 15

EXISTING PEAK HOUR COUNT YEAR (AUTOS):
2011

740 1006
v ^
336 < IN = 2067 < 389
374 > OUT = 2067 > 273
v ^
452 564

EXISTING PEAK HOUR TURNING MOVEMENT VOLUMES (TRUCKS IN PCE'S):

11 0 0
< v >
3 ^ ^ 2
3 > < 0
0 v v 2
< ^ >
PCE FACTORS BY AXLE:
2: 1.5 3: 2 4+: 3.0
0 5 0

TOTAL EXISTING PEAK HOUR TURNING MOVEMENT VOLUMES (PCES):
2011

233 376 142
< v >
203 ^ ^ 291
119 > < 82
58 v v 20
< ^ >
32 522 15

EXISTING PEAK PERIOD MODEL YEAR (AUTO):
2000

2510 2704
v ^
1066 < IN = 5306 < 452
972 > OUT = 5305 > 578
v ^
957 1372

EXISTING PEAK PERIOD MODEL YEAR (TRUCKS IN PCE'S):
1994

74 127
v ^
11 < IN = 205 < 41
13 > OUT = 202 > 29
v ^
35 77

EXISTING PEAK HOUR MODEL YEAR (PCE'S):
PHF FOR CARS: 0.28
PHF FOR TRUCKS: 0.25

721 789
v ^
301 < IN = 1537 < 137
275 > OUT = 1536 > 169
v ^
277 403

FUTURE PEAK PERIOD MODEL YEAR (AUTO):
2030

3513 4994
v ^
1045 < IN = 9772 < 2111
370 > OUT = 9772 > 844
v ^
2889 3778

FUTURE PEAK PERIOD MODEL YEAR (TRUCKS IN PCE'S):
2020

207 202
v ^
28 < IN = 419 < 95
30 > OUT = 423 > 107
v ^
86 87

FUTURE PEAK HOUR MODEL YEAR (PCE'S):
PHF FOR CARS: 0.28
PHF FOR TRUCKS: 0.25

1035 1449
v ^
300 < IN = 2841 < 615
111 > OUT = 2842 > 263
v ^
830 1080

RAW GROWTH (PCE'S): 2000 TO 2030
CONVERSION OF TRUCKS TO: 2025
FACTOR = 1.25

322 665
v ^
-1 < < 481
-163 > > 99
v ^
557 677

ADJUSTED GROWTH (PCE'S): 2000 TO 2030
10 MINIMUM GROWTH %

320 660
v ^
30 < IN = 1520 < 480
40 > OUT = 1350 > 100
v ^
560 680

OPENING YEAR GROWTH: 2011 TO 2023
12 YEARS

130 260
v ^
10 < < 190
20 > > 40
v ^
220 270

INITIAL OPENING YEAR VOLUMES:
2023

880 1280
v ^
360 < IN = 2700 < 580
400 > OUT = 2630 > 320
v ^
670 840

BALANCED OPENING YEAR VOLUMES:
2023

880 1310
v ^
370 < IN = 2700 < 580
400 > OUT = 2700 > 330
v ^
690 840

ANDERSON STREET (NS) / STEWART STREET (EW)

FUTURE DIRECTIONAL TURN VOLUMES FROM FUTURE DIRECTIONAL LINK VOLUMES

NCHRP 255

OPENING YEAR (2023) TRAFFIC CONDITIONS									
MORNING PEAK HOUR INPUT DATA					EVENING PEAK HOUR INPUT DATA				
APPROACH	TURNING MOVEMENT	BASE YEAR COUNT	APPROACH	OPENING YEAR TOTAL	APPROACH	TURNING MOVEMENT	BASE YEAR COUNT	APPROACH	OPENING YEAR TOTAL
NORTH	LEFT	**47**	SOUTH LEG		NORTH	LEFT	**32**	SOUTH LEG	
BOUND	THRU	**277**	IN ...	**530**	BOUND	THRU	**522**	IN ...	**840**
	RIGHT	**30**	OUT ...	**1,050**		RIGHT	**15**	OUT ...	**690**
SOUTH	LEFT	**234**	NORTH LEG		SOUTH	LEFT	**142**	NORTH LEG	
BOUND	THRU	**625**	IN ...	**1,810**	BOUND	THRU	**376**	IN ...	**880**
	RIGHT	**526**	OUT ...	**720**		RIGHT	**233**	OUT ...	**1,310**
EAST	LEFT	**196**	WEST LEG		EAST	LEFT	**203**	WEST LEG	
BOUND	THRU	**66**	IN ...	**390**	BOUND	THRU	**119**	IN ...	**400**
	RIGHT	**39**	OUT ...	**660**		RIGHT	**58**	OUT ...	**370**
WEST	LEFT	**22**	EAST LEG		WEST	LEFT	**20**	EAST LEG	
BOUND	THRU	**67**	IN ...	**260**	BOUND	THRU	**82**	IN ...	**580**
	RIGHT	**146**	OUT ...	**560**		RIGHT	**291**	OUT ...	**330**

OPENING YEAR (2023) TRAFFIC CONDITIONS									
MORNING PEAK HOUR RESULTS					EVENING PEAK HOUR RESULTS				
APPROACH	TURNING MOVEMENT	BASE YEAR COUNT	OPENING YEAR FORECAST	PEAK - DAILY RELATIONSHIP	APPROACH	TURNING MOVEMENT	BASE YEAR COUNT	OPENING YEAR FORECAST	PEAK - DAILY RELATIONSHIP
NORTH	LEFT	**47**	**74**	NORTH LEG	NORTH	LEFT	**32**	**53**	NORTH LEG
BOUND	THRU	**277**	**379**	RATIO **10.1%**	BOUND	THRU	**522**	**751**	RATIO **9.0%**
	RIGHT	**30**	**76**	ADT 25,400		RIGHT	**15**	**33**	ADT 25,400
SOUTH	LEFT	**234**	**362**	SOUTH LEG	SOUTH	LEFT	**142**	**153**	SOUTH LEG
BOUND	THRU	**625**	**941**	RATIO **9.0%**	BOUND	THRU	**376**	**542**	RATIO **8.7%**
	RIGHT	**526**	**542**	ADT 17,500		RIGHT	**233**	**240**	ADT 17,500
EAST	LEFT	**196**	**197**	EAST LEG	EAST	LEFT	**203**	**210**	EAST LEG
BOUND	THRU	**66**	**122**	RATIO **8.1%**	BOUND	THRU	**119**	**144**	RATIO **8.9%**
	RIGHT	**39**	**70**	ADT 10,200		RIGHT	**58**	**94**	ADT 10,200
WEST	LEFT	**22**	**39**	WEST LEG	WEST	LEFT	**20**	**55**	WEST LEG
BOUND	THRU	**67**	**76**	RATIO **12.2%**	BOUND	THRU	**82**	**127**	RATIO **9.7%**
	RIGHT	**146**	**151**	ADT 8,900		RIGHT	**291**	**396**	ADT 8,900

ANDERSON STREET (NS) / UNIVERSITY AVENUE (EW)

MORNING PEAK HOUR

EXISTING PEAK HOUR TURNING MOVEMENT VOLUMES (AUTOS):
2011

```
                    119   570   0
                  <     v     >
          30 ^                  ^   0
           0 >                  <   0
          23 v                  v   0
                  <     ^     >
                     62   309   0
```

EXISTING PEAK HOUR COUNT YEAR (AUTOS):
2011

```
                    689   339
                    v     ^
     181 <     IN  =   1113 <   0
      53 >     OUT =   1113 >   0
                    v     ^
                    593   371
```

EXISTING PEAK HOUR TURNING MOVEMENT VOLUMES (TRUCKS IN PCE'S):

```
                      3     6     0
                    <     v     >
           2 ^                  ^   0
           0 >                  <   0
           0 v                  v   0
                    <     ^     >
```

PCE FACTORS BY AXLE:
2: 1.5 3: 2.0 4+: 3.0

```
                      2    12     0
```

TOTAL EXISTING PEAK HOUR TURNING MOVEMENT VOLUMES (PCES):
2011

```
                    122   576   0
                  <     v     >
          32 ^                  ^   0
           0 >                  <   0
          23 v                  v   0
                  <     ^     >
                     64   321   0
```

EXISTING PEAK PERIOD MODEL YEAR (AUTO):
2000

```
                    673   838
                    v     ^
       0 <     IN  =   1511 <   0
       0 >     OUT =   1511 >   0
                    v     ^
                    673   838
```

EXISTING PEAK PERIOD MODEL YEAR (TRUCKS IN PCE'S):
1994

```
                     19    56
                    v     ^
       0 <     IN  =     75 <   0
       0 >     OUT =     75 >   0
                    v     ^
                     19    56
```

EXISTING PEAK HOUR MODEL YEAR (PCE'S):
PHF FOR CARS: 0.38
PHF FOR TRUCKS: 0.333

```
                    262   337
                    v     ^
       0 <     IN  =    599 <   0
       0 >     OUT =    599 >   0
                    v     ^
                    262   337
```

FUTURE PEAK PERIOD MODEL YEAR (AUTO):
2030

```
                   2940  1721
                    v     ^
       0 <     IN  =   4661 <   0
       0 >     OUT =   4661 >   0
                    v     ^
                   2940  1721
```

FUTURE PEAK PERIOD MODEL YEAR (TRUCKS IN PCE'S):
2020

```
                     74   186
                    v     ^
       0 <     IN  =    260 <   0
       0 >     OUT =    260 >   0
                    v     ^
                     74   186
```

FUTURE PEAK HOUR MODEL YEAR (PCE'S):
PHF FOR CARS: 0.38
PHF FOR TRUCKS: 0.333

```
                   1142   716
                    v     ^
       0 <     IN  =   1858 <   0
       0 >     OUT =   1858 >   0
                    v     ^
                   1142   716
```

RAW GROWTH (PCE'S): 2000 TO 2030
CONVERSION OF TRUCKS TO: 2025
FACTOR = 1.25

```
                    884   390
                    v     ^
       0 <                <   0
       0 >                >   0
                    v     ^
                    884   390
```

ADJUSTED GROWTH (PCE'S): 2000 TO 2030
10 MINIMUM GROWTH %

```
                    880   390
                    v     ^
      20 <     IN  =   1280 <   0
      10 >     OUT =   1290 >   0
                    v     ^
                    880   390
```

OPENING YEAR GROWTH: 2011 TO 2023
12 YEARS

```
                    350   160
                    v     ^
      10 <                <   0
       0 >                >   0
                    v     ^
                    350   160
```

INITIAL OPENING YEAR VOLUMES:
2023

```
                   1050   510
                    v     ^
     200 <     IN  =   1660 <   0
      60 >     OUT =   1660 >   0
                    v     ^
                    950   550
```

BALANCED OPENING YEAR VOLUMES:
2023

```
                   1050   510
                    v     ^
     200 <     IN  =   1660 <   0
      60 >     OUT =   1660 >   0
                    v     ^
                    950   550
```

EVENING PEAK HOUR

EXISTING PEAK HOUR TURNING MOVEMENT VOLUMES (AUTOS):
2011

```
                     53   405   0
                  <     v     >
          56 ^                  ^   0
           0 >                  <   0
          30 v                  v   0
                  <     ^     >
                     58   555   0
```

EXISTING PEAK HOUR COUNT YEAR (AUTOS):
2011

```
                    458   611
                    v     ^
     111 <     IN  =   1157 <   0
      86 >     OUT =   1157 >   0
                    v     ^
                    435   613
```

EXISTING PEAK HOUR TURNING MOVEMENT VOLUMES (TRUCKS IN PCE'S):

```
                      0     0     0
                    <     v     >
           0 ^                  ^   0
           0 >                  <   0
           0 v                  v   0
                    <     ^     >
```

PCE FACTORS BY AXLE:
2: 1.5 3: 2 4+: 3.0

```
                      0     0     0
```

TOTAL EXISTING PEAK HOUR TURNING MOVEMENT VOLUMES (PCES):
2011

```
                     53   405   0
                  <     v     >
          56 ^                  ^   0
           0 >                  <   0
          30 v                  v   0
                  <     ^     >
                     58   555   0
```

EXISTING PEAK PERIOD MODEL YEAR (AUTO):
2000

```
                   1024  1383
                    v     ^
       0 <     IN  =   2407 <   0
       0 >     OUT =   2407 >   0
                    v     ^
                   1024  1383
```

EXISTING PEAK PERIOD MODEL YEAR (TRUCKS IN PCE'S):
1994

```
                     35    77
                    v     ^
       0 <     IN  =    112 <   0
       0 >     OUT =    112 >   0
                    v     ^
                     35    77
```

EXISTING PEAK HOUR MODEL YEAR (PCE'S):
PHF FOR CARS: 0.28
PHF FOR TRUCKS: 0.25

```
                    295   406
                    v     ^
       0 <     IN  =    702 <   0
       0 >     OUT =    702 >   0
                    v     ^
                    295   406
```

FUTURE PEAK PERIOD MODEL YEAR (AUTO):
2030

```
                   3039  3881
                    v     ^
       0 <     IN  =   6920 <   0
       0 >     OUT =   6920 >   0
                    v     ^
                   3039  3881
```

FUTURE PEAK PERIOD MODEL YEAR (TRUCKS IN PCE'S):
2020

```
                     88    87
                    v     ^
       0 <     IN  =    175 <   0
       0 >     OUT =    175 >   0
                    v     ^
                     88    87
```

FUTURE PEAK HOUR MODEL YEAR (PCE'S):
PHF FOR CARS: 0.28
PHF FOR TRUCKS: 0.25

```
                    873  1108
                    v     ^
       0 <     IN  =   1981 <   0
       0 >     OUT =   1981 >   0
                    v     ^
                    873  1108
```

RAW GROWTH (PCE'S): 2000 TO 2030
CONVERSION OF TRUCKS TO: 2025
FACTOR = 1.25

```
                    581   703
                    v     ^
       0 <                <   0
       0 >                >   0
                    v     ^
                    581   703
```

ADJUSTED GROWTH (PCE'S): 2000 TO 2030
10 MINIMUM GROWTH %

```
                    580   700
                    v     ^
      10 <     IN  =   1290 <   0
      10 >     OUT =   1290 >   0
                    v     ^
                    580   700
```

OPENING YEAR GROWTH: 2011 TO 2023
12 YEARS

```
                    230   280
                    v     ^
       0 <                <   0
       0 >                >   0
                    v     ^
                    230   280
```

INITIAL OPENING YEAR VOLUMES:
2023

```
                    690   890
                    v     ^
     110 <     IN  =   1670 <   0
      90 >     OUT =   1670 >   0
                    v     ^
                    670   890
```

BALANCED OPENING YEAR VOLUMES:
2023

```
                    690   890
                    v     ^
     110 <     IN  =   1670 <   0
      90 >     OUT =   1670 >   0
                    v     ^
                    670   890
```

ANDERSON STREET (NS) / UNIVERSITY AVENUE (EW)

FUTURE DIRECTIONAL TURN VOLUMES FROM FUTURE DIRECTIONAL LINK VOLUMES

NCHRP 255

OPENING YEAR (2023) TRAFFIC CONDITIONS									
MORNING PEAK HOUR INPUT DATA					EVENING PEAK HOUR INPUT DATA				
APPROACH	TURNING MOVEMENT	BASE YEAR COUNT	APPROACH	OPENING YEAR TOTAL	APPROACH	TURNING MOVEMENT	BASE YEAR COUNT	APPROACH	OPENING YEAR TOTAL
NORTH	LEFT	**64**	SOUTH LEG		NORTH	LEFT	**58**	SOUTH LEG	
BOUND	THRU	**321**	IN ...	**550**	BOUND	THRU	**555**	IN ...	**890**
	RIGHT	**0**	OUT ...	**950**		RIGHT	**0**	OUT ...	**670**
SOUTH	LEFT	**0**	NORTH LEG		SOUTH	LEFT	**0**	NORTH LEG	
BOUND	THRU	**576**	IN ...	**1,050**	BOUND	THRU	**405**	IN ...	**690**
	RIGHT	**122**	OUT ...	**510**		RIGHT	**53**	OUT ...	**890**
EAST	LEFT	**32**	WEST LEG		EAST	LEFT	**56**	WEST LEG	
BOUND	THRU	**0**	IN ...	**60**	BOUND	THRU	**0**	IN ...	**90**
	RIGHT	**23**	OUT ...	**200**		RIGHT	**30**	OUT ...	**110**
WEST	LEFT	**0**	EAST LEG		WEST	LEFT	**0**	EAST LEG	
BOUND	THRU	**0**	IN ...	**0**	BOUND	THRU	**0**	IN ...	**0**
	RIGHT	**0**	OUT ...	**0**		RIGHT	**0**	OUT ...	**0**

OPENING YEAR (2023) TRAFFIC CONDITIONS									
MORNING PEAK HOUR RESULTS					EVENING PEAK HOUR RESULTS				
APPROACH	TURNING MOVEMENT	BASE YEAR COUNT	OPENING YEAR FORECAST	PEAK - DAILY RELATIONSHIP	APPROACH	TURNING MOVEMENT	BASE YEAR COUNT	OPENING YEAR FORECAST	PEAK - DAILY RELATIONSHIP
NORTH	LEFT	**64**	**71**	NORTH LEG	NORTH	LEFT	**58**	**60**	NORTH LEG
BOUND	THRU	**321**	**477**	RATIO **8.9%**	BOUND	THRU	**555**	**832**	RATIO **9.0%**
	RIGHT	**0**	**0**	ADT 17,500		RIGHT	**0**	**0**	ADT 17,500
SOUTH	LEFT	**0**	**0**	SOUTH LEG	SOUTH	LEFT	**0**	**0**	SOUTH LEG
BOUND	THRU	**576**	**923**	RATIO **8.7%**	BOUND	THRU	**405**	**638**	RATIO **9.0%**
	RIGHT	**122**	**129**	ADT 17,300		RIGHT	**53**	**55**	ADT 17,300
EAST	LEFT	**32**	**33**	EAST LEG	EAST	LEFT	**56**	**58**	EAST LEG
BOUND	THRU	**0**	**0**	RATIO **#DIV/0!**	BOUND	THRU	**0**	**0**	RATIO **#DIV/0!**
	RIGHT	**23**	**27**	ADT 0		RIGHT	**30**	**32**	ADT 0
WEST	LEFT	**0**	**0**	WEST LEG	WEST	LEFT	**0**	**0**	WEST LEG
BOUND	THRU	**0**	**0**	RATIO **10.8%**	BOUND	THRU	**0**	**0**	RATIO **8.5%**
	RIGHT	**0**	**0**	ADT 2,400		RIGHT	**0**	**0**	ADT 2,400

ANDERSON STREET (NS) / MOUND STREET (EW)

MORNING PEAK HOUR

EXISTING PEAK HOUR TURNING MOVEMENT VOLUMES (AUTOS):

2011

			10	16	16	
			<	v	>	
27	^				^	7
93	>				<	19
446	v				v	21
			<	^	>	
			352	72	63	

EXISTING PEAK HOUR COUNT YEAR (AUTOS):

2011

				42	106	
				v	^	
381	<	IN	=	1142	<	47
566	>	OUT	=	1142	>	172
				v	^	
				483	487	

EXISTING PEAK HOUR TURNING MOVEMENT VOLUMES (TRUCKS IN PCE'S):

			0	0	0	
			<	v	>	
0	^				^	2
2	>				<	0
0	v				v	6
			<	^	>	
			12	0	0	

PCE FACTORS BY AXLE:
2: 1.5 3: 2.0 4+: 3.0

TOTAL EXISTING PEAK HOUR TURNING MOVEMENT VOLUMES (PCES):

2011

			10	16	16	
			<	v	>	
27	^				^	9
95	>				<	19
446	v				v	27
			<	^	>	
			364	72	63	

EXISTING PEAK PERIOD MODEL YEAR (AUTO):

2000

				0	0	
				v	^	
838	<	IN	=	1567	<	118
673	>	OUT	=	1568	>	117
				v	^	
				613	776	

EXISTING PEAK PERIOD MODEL YEAR (TRUCKS IN PCE'S):

1994

				0	0	
				v	^	
56	<	IN	=	77	<	10
19	>	OUT	=	75	>	9
				v	^	
				10	48	

EXISTING PEAK HOUR MODEL YEAR (PCE'S):
PHF FOR CARS: 0.38
PHF FOR TRUCKS: 0.333

				0	0	
				v	^	
337	<	IN	=	621	<	48
262	>	OUT	=	621	>	47
				v	^	
				236	311	

FUTURE PEAK PERIOD MODEL YEAR (AUTO):

2030

				203	9	
				v	^	
1721	<	IN	=	4873	<	2
2940	>	OUT	=	4873	>	328
				v	^	
				2815	1728	

FUTURE PEAK PERIOD MODEL YEAR (TRUCKS IN PCE'S):

2020

				0	0	
				v	^	
186	<	IN	=	273	<	32
74	>	OUT	=	273	>	36
				v	^	
				51	167	

FUTURE PEAK HOUR MODEL YEAR (PCE'S):
PHF FOR CARS: 0.38
PHF FOR TRUCKS: 0.333

				77	3	
				v	^	
716	<	IN	=	1943	<	11
1142	>	OUT	=	1943	>	137
				v	^	
				1087	712	

RAW GROWTH (PCE'S): 2000 TO 2030
CONVERSION OF TRUCKS TO: 2025
FACTOR = 1.25

				77	3	
				v	^	
390	<				<	-35
884	>				>	91
				v	^	
				854	411	

ADJUSTED GROWTH (PCE'S): 2000 TO 2030
10 MINIMUM GROWTH %

				80	10	
				v	^	
390	<	IN	=	1380	<	10
880	>	OUT	=	1340	>	90
				v	^	
				850	410	

OPENING YEAR GROWTH: 2011 TO 2023
12 YEARS

				30	0	
				v	^	
160	<				<	0
350	>				>	40
				v	^	
				340	160	

INITIAL OPENING YEAR VOLUMES:

2023

				70	110	
				v	^	
550	<	IN	=	1710	<	60
920	>	OUT	=	1700	>	210
				v	^	
				830	660	

BALANCED OPENING YEAR VOLUMES:

2023

				70	110	
				v	^	
550	<	IN	=	1710	<	60
920	>	OUT	=	1700	>	210
				v	^	
				830	660	

EVENING PEAK HOUR

EXISTING PEAK HOUR TURNING MOVEMENT VOLUMES (AUTOS):

2011

			8	57	8	
			<	v	>	
10	^				^	3
54	>				<	74
380	v				v	39
			<	^	>	
			529	32	45	

EXISTING PEAK HOUR COUNT YEAR (AUTOS):

2011

				73	45	
				v	^	
611	<	IN	=	1239	<	116
444	>	OUT	=	1239	>	107
				v	^	
				476	606	

EXISTING PEAK HOUR TURNING MOVEMENT VOLUMES (TRUCKS IN PCE'S):

			0	0	0	
			<	v	>	
0	^				^	0
0	>				<	0
0	v				v	6
			<	^	>	
			0	0	0	

PCE FACTORS BY AXLE:
2: 1.5 3: 2 4+: 3.0

TOTAL EXISTING PEAK HOUR TURNING MOVEMENT VOLUMES (PCES):

2011

			8	57	8	
			<	v	>	
10	^				^	3
54	>				<	74
380	v				v	45
			<	^	>	
			529	32	45	

EXISTING PEAK PERIOD MODEL YEAR (AUTO):

2000

				0	0	
				v	^	
1383	<	IN	=	2498	<	211
1024	>	OUT	=	2498	>	208
				v	^	
				907	1263	

EXISTING PEAK PERIOD MODEL YEAR (TRUCKS IN PCE'S):

1994

				0	0	
				v	^	
77	<	IN	=	115	<	17
35	>	OUT	=	112	>	7
				v	^	
				28	63	

EXISTING PEAK HOUR MODEL YEAR (PCE'S):
PHF FOR CARS: 0.28
PHF FOR TRUCKS: 0.25

				0	0	
				v	^	
406	<	IN	=	728	<	63
295	>	OUT	=	727	>	60
				v	^	
				261	369	

FUTURE PEAK PERIOD MODEL YEAR (AUTO):

2030

				79	529	
				v	^	
3881	<	IN	=	7528	<	824
3039	>	OUT	=	7528	>	4
				v	^	
				3114	3586	

FUTURE PEAK PERIOD MODEL YEAR (TRUCKS IN PCE'S):

2020

				0	0	
				v	^	
87	<	IN	=	187	<	29
88	>	OUT	=	186	>	18
				v	^	
				81	70	

FUTURE PEAK HOUR MODEL YEAR (PCE'S):
PHF FOR CARS: 0.28
PHF FOR TRUCKS: 0.25

				22	148	
				v	^	
1108	<	IN	=	2155	<	238
873	>	OUT	=	2154	>	6
				v	^	
				892	1022	

RAW GROWTH (PCE'S): 2000 TO 2030
CONVERSION OF TRUCKS TO: 2025
FACTOR = 1.25

				22	148	
				v	^	
703	<				<	175
581	>				>	-54
				v	^	
				635	653	

ADJUSTED GROWTH (PCE'S): 2000 TO 2030
10 MINIMUM GROWTH %

				20	150	
				v	^	
700	<	IN	=	1430	<	180
580	>	OUT	=	1490	>	10
				v	^	
				630	650	

OPENING YEAR GROWTH: 2011 TO 2023
12 YEARS

				10	60	
				v	^	
280	<				<	70
230	>				>	0
				v	^	
				250	260	

INITIAL OPENING YEAR VOLUMES:

2023

				80	110	
				v	^	
890	<	IN	=	1810	<	190
670	>	OUT	=	1840	>	110
				v	^	
				730	870	

BALANCED OPENING YEAR VOLUMES:

2023

				80	110	
				v	^	
890	<	IN	=	1830	<	190
680	>	OUT	=	1840	>	110
				v	^	
				730	880	

ANDERSON STREET (NS) / MOUND STREET (EW)

FUTURE DIRECTIONAL TURN VOLUMES FROM FUTURE DIRECTIONAL LINK VOLUMES

NCHRP 255

OPENING YEAR (2023) TRAFFIC CONDITIONS									
MORNING PEAK HOUR INPUT DATA					EVENING PEAK HOUR INPUT DATA				
APPROACH	TURNING MOVEMENT	BASE YEAR COUNT	APPROACH	OPENING YEAR TOTAL	APPROACH	TURNING MOVEMENT	BASE YEAR COUNT	APPROACH	OPENING YEAR TOTAL
NORTH	LEFT	**364**	SOUTH LEG		NORTH	LEFT	**529**	SOUTH LEG	
BOUND	THRU	**72**	IN ...	**660**	BOUND	THRU	**32**	IN ...	**880**
	RIGHT	**63**	OUT ...	**830**		RIGHT	**45**	OUT ...	**730**
SOUTH	LEFT	**16**	NORTH LEG		SOUTH	LEFT	**8**	NORTH LEG	
BOUND	THRU	**16**	IN ...	**70**	BOUND	THRU	**57**	IN ...	**80**
	RIGHT	**10**	OUT ...	**110**		RIGHT	**8**	OUT ...	**110**
EAST	LEFT	**27**	WEST LEG		EAST	LEFT	**10**	WEST LEG	
BOUND	THRU	**95**	IN ...	**920**	BOUND	THRU	**54**	IN ...	**680**
	RIGHT	**446**	OUT ...	**550**		RIGHT	**380**	OUT ...	**890**
WEST	LEFT	**27**	EAST LEG		WEST	LEFT	**45**	EAST LEG	
BOUND	THRU	**19**	IN ...	**60**	BOUND	THRU	**74**	IN ...	**190**
	RIGHT	**9**	OUT ...	**210**		RIGHT	**3**	OUT ...	**110**

OPENING YEAR (2023) TRAFFIC CONDITIONS									
MORNING PEAK HOUR RESULTS					EVENING PEAK HOUR RESULTS				
APPROACH	TURNING MOVEMENT	BASE YEAR COUNT	OPENING YEAR FORECAST	PEAK - DAILY RELATIONSHIP	APPROACH	TURNING MOVEMENT	BASE YEAR COUNT	OPENING YEAR FORECAST	PEAK - DAILY RELATIONSHIP
NORTH	LEFT	**364**	**512**	NORTH LEG	NORTH	LEFT	**529**	**766**	NORTH LEG
BOUND	THRU	**72**	**72**	RATIO **10.7%**	BOUND	THRU	**32**	**76**	RATIO **11.4%**
	RIGHT	**63**	**70**	ADT 1,700		RIGHT	**45**	**47**	ADT 1,700
SOUTH	LEFT	**16**	**22**	SOUTH LEG	SOUTH	LEFT	**8**	**9**	SOUTH LEG
BOUND	THRU	**16**	**30**	RATIO **8.3%**	BOUND	THRU	**57**	**65**	RATIO **9.0%**
	RIGHT	**10**	**17**	ADT 17,900		RIGHT	**8**	**9**	ADT 17,900
EAST	LEFT	**27**	**31**	EAST LEG	EAST	LEFT	**10**	**26**	EAST LEG
BOUND	THRU	**95**	**118**	RATIO **10.1%**	BOUND	THRU	**54**	**59**	RATIO **11.3%**
	RIGHT	**446**	**768**	ADT 2,700		RIGHT	**380**	**597**	ADT 2,700
WEST	LEFT	**27**	**32**	WEST LEG	WEST	LEFT	**45**	**68**	WEST LEG
BOUND	THRU	**19**	**21**	RATIO **8.5%**	BOUND	THRU	**74**	**115**	RATIO **9.1%**
	RIGHT	**9**	**10**	ADT 17,300		RIGHT	**3**	**8**	ADT 17,300

ANDERSON STREET (NS) / TAYLOR STREET (EW)

MORNING PEAK HOUR

EXISTING PEAK HOUR TURNING MOVEMENT VOLUMES (AUTOS):

2011

41 465 0
< v >
1 ^ ^ 0
0 > < 0
0 v v 0
< ^ >
91 459 0

EXISTING PEAK HOUR COUNT YEAR (AUTOS):

2011

506 460
v ^
132 < IN = 1057 < 0
1 > OUT = 1057 > 0
v ^
465 550

EXISTING PEAK HOUR TURNING MOVEMENT VOLUMES (TRUCKS IN PCE'S):

0 8 0
< v >
0 ^ ^ 0
0 > < 0
0 v v 0
PCE FACTORS BY AXLE: < ^ >
2: 1.5 3: 2.0 4+: 3.0 0 15 0

TOTAL EXISTING PEAK HOUR TURNING MOVEMENT VOLUMES (PCES):

2011

41 473 0
< v >
1 ^ ^ 0
0 > < 0
0 v v 0
< ^ >
91 474 0

EXISTING PEAK PERIOD MODEL YEAR (AUTO):

2000

613 776
v ^
0 < IN = 1389 < 0
0 > OUT = 1389 > 0
v ^
613 776

EXISTING PEAK PERIOD MODEL YEAR (TRUCKS IN PCE'S):

1994

10 48
v ^
0 < IN = 58 < 0
0 > OUT = 58 > 0
v ^
10 48

EXISTING PEAK HOUR MODEL YEAR (PCE'S):

PHF FOR CARS: 0.38
PHF FOR TRUCKS: 0.333

236 311
v ^
0 < IN = 547 < 0
0 > OUT = 547 > 0
v ^
236 311

FUTURE PEAK PERIOD MODEL YEAR (AUTO):

2030

2815 1728
v ^
0 < IN = 4543 < 0
0 > OUT = 4543 > 0
v ^
2815 1728

FUTURE PEAK PERIOD MODEL YEAR (TRUCKS IN PCE'S):

2020

51 167
v ^
0 < IN = 218 < 0
0 > OUT = 218 > 0
v ^
51 167

FUTURE PEAK HOUR MODEL YEAR (PCE'S):

PHF FOR CARS: 0.38
PHF FOR TRUCKS: 0.333

1087 712
v ^
0 < IN = 1799 < 0
0 > OUT = 1799 > 0
v ^
1087 712

RAW GROWTH (PCE'S): 2000 TO 2030
CONVERSION OF TRUCKS TO: 2025
FACTOR = 1.25

854 411
v ^
0 < < 0
0 > > 0
v ^
854 411

ADJUSTED GROWTH (PCE'S): 2000 TO 2030
10 MINIMUM GROWTH %

850 410
v ^
10 < IN = 1260 < 0
0 > OUT = 1270 > 0
v ^
850 410

OPENING YEAR GROWTH: 2011 TO 2023
12 YEARS

340 160
v ^
0 < < 0
0 > > 0
v ^
340 160

INITIAL OPENING YEAR VOLUMES:

2023

850 640
v ^
130 < IN = 1580 < 0
0 > OUT = 1580 > 0
v ^
810 730

BALANCED OPENING YEAR VOLUMES:

2023

850 640
v ^
130 < IN = 1580 < 0
0 > OUT = 1580 > 0
v ^
810 730

EVENING PEAK HOUR

EXISTING PEAK HOUR TURNING MOVEMENT VOLUMES (AUTOS):

2011

5 461 0
< v >
0 ^ ^ 0
0 > < 0
0 v v 0
< ^ >
15 589 0

EXISTING PEAK HOUR COUNT YEAR (AUTOS):

2011

466 589
v ^
20 < IN = 1070 < 0
0 > OUT = 1070 > 0
v ^
461 604

EXISTING PEAK HOUR TURNING MOVEMENT VOLUMES (TRUCKS IN PCE'S):

0 13 0
< v >
0 ^ ^ 0
0 > < 0
0 v v 0
PCE FACTORS BY AXLE: < ^ >
2: 1.5 3: 2 4+: 3.0 0 6 0

TOTAL EXISTING PEAK HOUR TURNING MOVEMENT VOLUMES (PCES):

2011

5 474 0
< v >
0 ^ ^ 0
0 > < 0
0 v v 0
< ^ >
15 595 0

EXISTING PEAK PERIOD MODEL YEAR (AUTO):

2000

907 1263
v ^
0 < IN = 2170 < 0
0 > OUT = 2170 > 0
v ^
907 1263

EXISTING PEAK PERIOD MODEL YEAR (TRUCKS IN PCE'S):

1994

28 63
v ^
0 < IN = 91 < 0
0 > OUT = 91 > 0
v ^
28 63

EXISTING PEAK HOUR MODEL YEAR (PCE'S):

PHF FOR CARS: 0.28
PHF FOR TRUCKS: 0.25

261 369
v ^
0 < IN = 630 < 0
0 > OUT = 630 > 0
v ^
261 369

FUTURE PEAK PERIOD MODEL YEAR (AUTO):

2030

3114 3586
v ^
0 < IN = 6700 < 0
0 > OUT = 6700 > 0
v ^
3114 3586

FUTURE PEAK PERIOD MODEL YEAR (TRUCKS IN PCE'S):

2020

81 70
v ^
0 < IN = 151 < 0
0 > OUT = 151 > 0
v ^
81 70

FUTURE PEAK HOUR MODEL YEAR (PCE'S):

PHF FOR CARS: 0.28
PHF FOR TRUCKS: 0.25

892 1022
v ^
0 < IN = 1914 < 0
0 > OUT = 1914 > 0
v ^
892 1022

RAW GROWTH (PCE'S): 2000 TO 2030
CONVERSION OF TRUCKS TO: 2025
FACTOR = 1.25

635 653
v ^
0 < < 0
0 > > 0
v ^
635 653

ADJUSTED GROWTH (PCE'S): 2000 TO 2030
10 MINIMUM GROWTH %

630 650
v ^
0 < IN = 1280 < 0
0 > OUT = 1280 > 0
v ^
630 650

OPENING YEAR GROWTH: 2011 TO 2023
12 YEARS

250 260
v ^
0 < < 0
0 > > 0
v ^
250 260

INITIAL OPENING YEAR VOLUMES:

2023

730 860
v ^
20 < IN = 1600 < 0
0 > OUT = 1600 > 0
v ^
720 870

BALANCED OPENING YEAR VOLUMES:

2023

730 860
v ^
20 < IN = 1600 < 0
0 > OUT = 1600 > 0
v ^
720 870

ANDERSON STREET (NS) / TAYLOR STREET (EW)

FUTURE DIRECTIONAL TURN VOLUMES FROM FUTURE DIRECTIONAL LINK VOLUMES

NCHRP 255

OPENING YEAR (2023) TRAFFIC CONDITIONS									
MORNING PEAK HOUR INPUT DATA					EVENING PEAK HOUR INPUT DATA				
APPROACH	TURNING MOVEMENT	BASE YEAR COUNT	APPROACH	OPENING YEAR TOTAL	APPROACH	TURNING MOVEMENT	BASE YEAR COUNT	APPROACH	OPENING YEAR TOTAL
NORTH	LEFT	**91**	SOUTH LEG		NORTH	LEFT	**15**	SOUTH LEG	
BOUND	THRU	**474**	IN ...	**730**	BOUND	THRU	**595**	IN ...	**870**
	RIGHT	**0**	OUT ...	**810**		RIGHT	**0**	OUT ...	**720**
SOUTH	LEFT	**0**	NORTH LEG		SOUTH	LEFT	**0**	NORTH LEG	
BOUND	THRU	**473**	IN ...	**850**	BOUND	THRU	**474**	IN ...	**730**
	RIGHT	**41**	OUT ...	**640**		RIGHT	**5**	OUT ...	**860**
EAST	LEFT	**1**	WEST LEG		EAST	LEFT	**0**	WEST LEG	
BOUND	THRU	**0**	IN ...	**0**	BOUND	THRU	**0**	IN ...	**0**
	RIGHT	**0**	OUT ...	**130**		RIGHT	**0**	OUT ...	**20**
WEST	LEFT	**0**	EAST LEG		WEST	LEFT	**0**	EAST LEG	
BOUND	THRU	**0**	IN ...	**0**	BOUND	THRU	**0**	IN ...	**0**
	RIGHT	**0**	OUT ...	**0**		RIGHT	**0**	OUT ...	**0**

OPENING YEAR (2023) TRAFFIC CONDITIONS									
MORNING PEAK HOUR RESULTS					EVENING PEAK HOUR RESULTS				
APPROACH	TURNING MOVEMENT	BASE YEAR COUNT	OPENING YEAR FORECAST	PEAK - DAILY RELATIONSHIP	APPROACH	TURNING MOVEMENT	BASE YEAR COUNT	OPENING YEAR FORECAST	PEAK - DAILY RELATIONSHIP
NORTH	LEFT	**91**	**94**	NORTH LEG	NORTH	LEFT	**15**	**16**	NORTH LEG
BOUND	THRU	**474**	**640**	RATIO **8.4%**	BOUND	THRU	**595**	**860**	RATIO **8.9%**
	RIGHT	**0**	**0**	ADT 17,900		RIGHT	**0**	**0**	ADT 17,900
SOUTH	LEFT	**0**	**0**	SOUTH LEG	SOUTH	LEFT	**0**	**0**	SOUTH LEG
BOUND	THRU	**473**	**810**	RATIO **8.5%**	BOUND	THRU	**474**	**720**	RATIO **8.8%**
	RIGHT	**41**	**45**	ADT 18,200		RIGHT	**5**	**6**	ADT 18,200
EAST	LEFT	**1**	**2**	EAST LEG	EAST	LEFT	**0**	**0**	EAST LEG
BOUND	THRU	**0**	**0**	RATIO **#DIV/0!**	BOUND	THRU	**0**	**0**	RATIO **#DIV/0!**
	RIGHT	**0**	**0**	ADT 0		RIGHT	**0**	**0**	ADT 0
WEST	LEFT	**0**	**0**	WEST LEG	WEST	LEFT	**0**	**0**	WEST LEG
BOUND	THRU	**0**	**0**	RATIO **70.4%**	BOUND	THRU	**0**	**0**	RATIO **10.8%**
	RIGHT	**0**	**0**	ADT 200		RIGHT	**0**	**0**	ADT 200

ANDERSON STREET (NS) / PROSPECT AVENUE (EW)

MORNING PEAK HOUR

EXISTING PEAK HOUR TURNING MOVEMENT VOLUMES (AUTOS):
2011

```
                    0   362   62
                  <   v   >
          49 ^                ^   52
          12 >                <    0
          54 v                v   26
                  <   ^   >
                    0   443   60
```

EXISTING PEAK HOUR COUNT YEAR (AUTOS):
2011

```
                  424   544
                    v     ^
     0 <     IN =    1120 <   78
   115 >    OUT =    1120 >  134
                    v     ^
                  442   503
```

EXISTING PEAK HOUR TURNING MOVEMENT VOLUMES (TRUCKS IN PCE'S):

```
                    0    39   11
                  <   v   >
           6 ^                ^   14
           6 >                <    0
           2 v                v    6
                  <   ^   >
                    0    28    6
```

PCE FACTORS BY AXLE:
2: 1.5 3: 2.0 4+: 3.0

TOTAL EXISTING PEAK HOUR TURNING MOVEMENT VOLUMES (PCES):
2011

```
                    0   401   73
                  <   v   >
          55 ^                ^   66
          18 >                <    0
          56 v                v   32
                  <   ^   >
                    0   471   66
```

EXISTING PEAK PERIOD MODEL YEAR (AUTO):
2000

```
                  613   776
                    v     ^
     0 <     IN =    1389 <    0
     0 >    OUT =    1389 >    0
                    v     ^
                  613   776
```

EXISTING PEAK PERIOD MODEL YEAR (TRUCKS IN PCE'S):
1994

```
                   10    48
                    v     ^
     0 <     IN =      58 <    0
     0 >    OUT =      58 >    0
                    v     ^
                   10    48
```

EXISTING PEAK HOUR MODEL YEAR (PCE'S):
PHF FOR CARS: 0.38
PHF FOR TRUCKS: 0.333

```
                  236   311
                    v     ^
     0 <     IN =     547 <    0
     0 >    OUT =     547 >    0
                    v     ^
                  236   311
```

FUTURE PEAK PERIOD MODEL YEAR (AUTO):
2030

```
                 2815  1728
                    v     ^
   176 <     IN =    5410 <  1398
    34 >    OUT =    5410 >  1998
                    v     ^
                 1508  1163
```

FUTURE PEAK PERIOD MODEL YEAR (TRUCKS IN PCE'S):
2020

```
                   51   167
                    v     ^
     0 <     IN =     218 <    0
     0 >    OUT =     218 >    0
                    v     ^
                   51   167
```

FUTURE PEAK HOUR MODEL YEAR (PCE'S):
PHF FOR CARS: 0.38
PHF FOR TRUCKS: 0.333

```
                 1087   712
                    v     ^
    67 <     IN =    2128 <  531
    13 >    OUT =    2128 >  759
                    v     ^
                  590   498
```

RAW GROWTH (PCE'S): 2000 TO 2030
CONVERSION OF TRUCKS TO: 2025
FACTOR = 1.25

```
                  854   411
                    v     ^
    67 <                <  531
    13 >                >  759
                    v     ^
                  357   197
```

ADJUSTED GROWTH (PCE'S): 2000 TO 2030
10 MINIMUM GROWTH %

```
                  850   410
                    v     ^
    70 <     IN =    1590 <  530
    10 >    OUT =    1600 >  760
                    v     ^
                  360   200
```

OPENING YEAR GROWTH: 2011 TO 2023
12 YEARS

```
                  340   160
                    v     ^
    30 <                <  210
     0 >                >  300
                    v     ^
                  140    80
```

INITIAL OPENING YEAR VOLUMES:
2023

```
                  810   750
                    v     ^
    30 <     IN =    1870 <  310
   130 >    OUT =    1870 >  460
                    v     ^
                  630   620
```

BALANCED OPENING YEAR VOLUMES:
2023

```
                  810   750
                    v     ^
    30 <     IN =    1870 <  310
   130 >    OUT =    1870 >  460
                    v     ^
                  630   620
```

EVENING PEAK HOUR

EXISTING PEAK HOUR TURNING MOVEMENT VOLUMES (AUTOS):
2011

```
                    0   392   42
                  <   v   >
          81 ^                ^   83
          23 >                <    0
         124 v                v   72
                  <   ^   >
                    0   397   59
```

EXISTING PEAK HOUR COUNT YEAR (AUTOS):
2011

```
                  434   561
                    v     ^
     0 <     IN =    1273 <  155
   228 >    OUT =    1273 >  124
                    v     ^
                  588   456
```

EXISTING PEAK HOUR TURNING MOVEMENT VOLUMES (TRUCKS IN PCE'S):

```
                    0    53    5
                  <   v   >
          14 ^                ^   12
           9 >                <    0
           9 v                v    8
                  <   ^   >
                    0    36    3
```

PCE FACTORS BY AXLE:
2: 1.5 3: 2 4+: 3.0

TOTAL EXISTING PEAK HOUR TURNING MOVEMENT VOLUMES (PCES):
2011

```
                    0   445   47
                  <   v   >
          95 ^                ^   95
          32 >                <    0
         133 v                v   80
                  <   ^   >
                    0   433   62
```

EXISTING PEAK PERIOD MODEL YEAR (AUTO):
2000

```
                  907  1263
                    v     ^
     0 <     IN =    2170 <    0
     0 >    OUT =    2170 >    0
                    v     ^
                  907  1263
```

EXISTING PEAK PERIOD MODEL YEAR (TRUCKS IN PCE'S):
1994

```
                   28    63
                    v     ^
     0 <     IN =      91 <    0
     0 >    OUT =      91 >    0
                    v     ^
                   28    63
```

EXISTING PEAK HOUR MODEL YEAR (PCE'S):
PHF FOR CARS: 0.28
PHF FOR TRUCKS: 0.25

```
                  261   369
                    v     ^
     0 <     IN =     630 <    0
     0 >    OUT =     630 >    0
                    v     ^
                  261   369
```

FUTURE PEAK PERIOD MODEL YEAR (AUTO):
2030

```
                 3114  3586
                    v     ^
    51 <     IN =    9898 <  2955
   243 >    OUT =    9398 >  2647
                    v     ^
                 3114  3586
```

FUTURE PEAK PERIOD MODEL YEAR (TRUCKS IN PCE'S):
2020

```
                   81    70
                    v     ^
     0 <     IN =     151 <    0
     0 >    OUT =     151 >    0
                    v     ^
                   81    70
```

FUTURE PEAK HOUR MODEL YEAR (PCE'S):
PHF FOR CARS: 0.28
PHF FOR TRUCKS: 0.25

```
                  892  1022
                    v     ^
    14 <     IN =    2809 <  827
    68 >    OUT =    2669 >  741
                    v     ^
                  892  1022
```

RAW GROWTH (PCE'S): 2000 TO 2030
CONVERSION OF TRUCKS TO: 2025
FACTOR = 1.25

```
                  635   653
                    v     ^
    14 <                <  827
    68 >                >  741
                    v     ^
                  635   653
```

ADJUSTED GROWTH (PCE'S): 2000 TO 2030
10 MINIMUM GROWTH %

```
                  630   650
                    v     ^
    10 <     IN =    2180 <  830
    70 >    OUT =    2030 >  740
                    v     ^
                  630   650
```

OPENING YEAR GROWTH: 2011 TO 2023
12 YEARS

```
                  250   260
                    v     ^
     0 <                <  330
    30 >                >  300
                    v     ^
                  250   260
```

INITIAL OPENING YEAR VOLUMES:
2023

```
                  740   880
                    v     ^
     0 <     IN =    2300 <  510
   290 >    OUT =    2230 >  440
                    v     ^
                  910   760
```

BALANCED OPENING YEAR VOLUMES:
2023

```
                  740   910
                    v     ^
     0 <     IN =    2300 <  510
   290 >    OUT =    2300 >  450
                    v     ^
                  940   760
```

ANDERSON STREET (NS) / PROSPECT AVENUE (EW)

FUTURE DIRECTIONAL TURN VOLUMES FROM FUTURE DIRECTIONAL LINK VOLUMES

NCHRP 255

OPENING YEAR (2023) TRAFFIC CONDITIONS									
MORNING PEAK HOUR INPUT DATA					EVENING PEAK HOUR INPUT DATA				
APPROACH	TURNING MOVEMENT	BASE YEAR COUNT	APPROACH	OPENING YEAR TOTAL	APPROACH	TURNING MOVEMENT	BASE YEAR COUNT	APPROACH	OPENING YEAR TOTAL
NORTH	LEFT	**0**	SOUTH LEG		NORTH	LEFT	**0**	SOUTH LEG	
BOUND	THRU	**471**	IN ...	**620**	BOUND	THRU	**433**	IN ...	**760**
	RIGHT	**66**	OUT ...	**630**		RIGHT	**62**	OUT ...	**940**
SOUTH	LEFT	**73**	NORTH LEG		SOUTH	LEFT	**47**	NORTH LEG	
BOUND	THRU	**401**	IN ...	**810**	BOUND	THRU	**445**	IN ...	**740**
	RIGHT	**0**	OUT ...	**750**		RIGHT	**0**	OUT ...	**910**
EAST	LEFT	**55**	WEST LEG		EAST	LEFT	**95**	WEST LEG	
BOUND	THRU	**18**	IN ...	**130**	BOUND	THRU	**32**	IN ...	**290**
	RIGHT	**56**	OUT ...	**30**		RIGHT	**133**	OUT ...	**0**
WEST	LEFT	**32**	EAST LEG		WEST	LEFT	**80**	EAST LEG	
BOUND	THRU	**0**	IN ...	**310**	BOUND	THRU	**0**	IN ...	**510**
	RIGHT	**66**	OUT ...	**460**		RIGHT	**95**	OUT ...	**450**

OPENING YEAR (2023) TRAFFIC CONDITIONS									
MORNING PEAK HOUR RESULTS					EVENING PEAK HOUR RESULTS				
APPROACH	TURNING MOVEMENT	BASE YEAR COUNT	OPENING YEAR FORECAST	PEAK - DAILY RELATIONSHIP	APPROACH	TURNING MOVEMENT	BASE YEAR COUNT	OPENING YEAR FORECAST	PEAK - DAILY RELATIONSHIP
NORTH	LEFT	**0**	**0**	NORTH LEG	NORTH	LEFT	**0**	**0**	NORTH LEG
BOUND	THRU	**471**	**486**	RATIO **8.6%**	BOUND	THRU	**433**	**549**	RATIO **9.1%**
	RIGHT	**66**	**141**	ADT 18,200		RIGHT	**62**	**211**	ADT 18,200
SOUTH	LEFT	**73**	**282**	SOUTH LEG	SOUTH	LEFT	**47**	**161**	SOUTH LEG
BOUND	THRU	**401**	**514**	RATIO **8.2%**	BOUND	THRU	**445**	**579**	RATIO **11.0%**
	RIGHT	**0**	**0**	ADT 15,600		RIGHT	**0**	**0**	ADT 15,600
EAST	LEFT	**55**	**57**	EAST LEG	EAST	LEFT	**95**	**98**	EAST LEG
BOUND	THRU	**18**	**37**	RATIO **8.1%**	BOUND	THRU	**32**	**79**	RATIO **10.2%**
	RIGHT	**56**	**58**	ADT 9,400		RIGHT	**133**	**137**	ADT 9,400
WEST	LEFT	**32**	**78**	WEST LEG	WEST	LEFT	**80**	**236**	WEST LEG
BOUND	THRU	**0**	**0**	RATIO **4.6%**	BOUND	THRU	**0**	**0**	RATIO **9.5%**
	RIGHT	**66**	**227**	ADT 3,300		RIGHT	**95**	**274**	ADT 3,300

ANDERSON STREET (NS) / PROJECT ENTRANCE (EW)

MORNING PEAK HOUR

EXISTING PEAK HOUR TURNING MOVEMENT VOLUMES (AUTOS):
2011

```
                    113   348   0
                     <     v     >
44 ^                                ^   0
0 >                                 <   0
63 v                                v   0
                     <     ^     >
                    146   441   0
```

EXISTING PEAK HOUR COUNT YEAR (AUTOS):
2011

```
                          461   485
                           v     ^
259 <        IN =         1155 <      0
107 >        OUT =        1155 >      0
                           v     ^
                          411   587
```

EXISTING PEAK HOUR TURNING MOVEMENT VOLUMES (TRUCKS IN PCE'S):

```
                    5     0     0
                     <     v     >
0 ^                                 ^   0
0 >                                 <   0
14 v                                v   0
                     <     ^     >
                    9     10    0
```

PCE FACTORS BY AXLE:
2: 1.5 3: 2.0 4+: 3.0

TOTAL EXISTING PEAK HOUR TURNING MOVEMENT VOLUMES (PCES):
2011

```
                    118   348   0
                     <     v     >
44 ^                                ^   0
0 >                                 <   0
77 v                                v   0
                     <     ^     >
                    155   451   0
```

EXISTING PEAK PERIOD MODEL YEAR (AUTO):
2000

```
                          176   837
                           v     ^
0 <          IN =         1013 <      0
0 >          OUT =        1013 >      0
                           v     ^
                          176   837
```

EXISTING PEAK PERIOD MODEL YEAR (TRUCKS IN PCE'S):
1994

```
                          0     41
                           v     ^
0 <          IN =         41 <        0
0 >          OUT =        41 >        0
                           v     ^
                          0     41
```

EXISTING PEAK HOUR MODEL YEAR (PCE'S):
PHF FOR CARS: 0.38
PHF FOR TRUCKS: 0.333

```
                          67    332
                           v     ^
0 <          IN =         399 <       0
0 >          OUT =        399 >       0
                           v     ^
                          67    332
```

FUTURE PEAK PERIOD MODEL YEAR (AUTO):
2030

```
                          1508  1163
                           v     ^
852 <        IN =         3127 <      0
774 >        OUT =        3128 >      0
                           v     ^
                          1113  845
```

FUTURE PEAK PERIOD MODEL YEAR (TRUCKS IN PCE'S):
2020

```
                          45    142
                           v     ^
0 <          IN =         187 <       0
0 >          OUT =        187 >       0
                           v     ^
                          45    142
```

FUTURE PEAK HOUR MODEL YEAR (PCE'S):
PHF FOR CARS: 0.38
PHF FOR TRUCKS: 0.333

```
                          588   489
                           v     ^
324 <        IN =         1251 <      0
294 >        OUT =        1251 >      0
                           v     ^
                          438   368
```

RAW GROWTH (PCE'S): 2000 TO 2030
CONVERSION OF TRUCKS TO: 2025
FACTOR = 1.25

```
                          525   166
                           v     ^
324 <                                <   0
294 >                                >   0
                           v     ^
                          375   45
```

ADJUSTED GROWTH (PCE'S): 2000 TO 2030
10 MINIMUM GROWTH %

```
                          520   170
                           v     ^
320 <        IN =         860 <       0
290 >        OUT =        860 >       0
                           v     ^
                          370   50
```

OPENING YEAR GROWTH: 2011 TO 2023
12 YEARS

```
                          210   70
                           v     ^
130 <                                <   0
120 >                                >   0
                           v     ^
                          150   20
```

INITIAL OPENING YEAR VOLUMES:
2023

```
                          680   570
                           v     ^
400 <        IN =         1550 <      0
240 >        OUT =        1550 >      0
                           v     ^
                          580   630
```

BALANCED OPENING YEAR VOLUMES:
2023

```
                          680   570
                           v     ^
400 <        IN =         1550 <      0
240 >        OUT =        1550 >      0
                           v     ^
                          580   630
```

EVENING PEAK HOUR

EXISTING PEAK HOUR TURNING MOVEMENT VOLUMES (AUTOS):
2011

```
                    89    518   0
                     <     v     >
105 ^                               ^   0
3 >                                 <   0
94 v                                v   0
                     <     ^     >
                    90    355   0
```

EXISTING PEAK HOUR COUNT YEAR (AUTOS):
2011

```
                          607   460
                           v     ^
179 <        IN =         1254 <      0
202 >        OUT =        1254 >      3
                           v     ^
                          612   445
```

EXISTING PEAK HOUR TURNING MOVEMENT VOLUMES (TRUCKS IN PCE'S):

```
                    0     19    0
                     <     v     >
0 ^                                 ^   0
0 >                                 <   0
11 v                                v   0
                     <     ^     >
                    11    0     0
```

PCE FACTORS BY AXLE:
2: 1.5 3: 2 4+: 3.0

TOTAL EXISTING PEAK HOUR TURNING MOVEMENT VOLUMES (PCES):
2011

```
                    89    537   0
                     <     v     >
105 ^                               ^   0
3 >                                 <   0
105 v                               v   0
                     <     ^     >
                    101   355   0
```

EXISTING PEAK PERIOD MODEL YEAR (AUTO):
2000

```
                          957   742
                           v     ^
0 <          IN =         1699 <      0
0 >          OUT =        1699 >      0
                           v     ^
                          957   742
```

EXISTING PEAK PERIOD MODEL YEAR (TRUCKS IN PCE'S):
1994

```
                          26    50
                           v     ^
0 <          IN =         76 <        0
0 >          OUT =        76 >        0
                           v     ^
                          26    50
```

EXISTING PEAK HOUR MODEL YEAR (PCE'S):
PHF FOR CARS: 0.28
PHF FOR TRUCKS: 0.25

```
                          274   220
                           v     ^
0 <          IN =         495 <       0
0 >          OUT =        495 >       0
                           v     ^
                          274   220
```

FUTURE PEAK PERIOD MODEL YEAR (AUTO):
2030

```
                          1939  2438
                           v     ^
902 <        IN =         4955 <      0
1482 >       OUT =        4955 >      0
                           v     ^
                          1615  1534
```

FUTURE PEAK PERIOD MODEL YEAR (TRUCKS IN PCE'S):
2020

```
                          78    62
                           v     ^
0 <          IN =         140 <       0
0 >          OUT =        140 >       0
                           v
                          78    62
```

FUTURE PEAK HOUR MODEL YEAR (PCE'S):
PHF FOR CARS: 0.28
PHF FOR TRUCKS: 0.25

```
                          562   698
                           v     ^
253 <        IN =         1422 <      0
415 >        OUT =        1422 >      0
                           v     ^
                          472   445
```

RAW GROWTH (PCE'S): 2000 TO 2030
CONVERSION OF TRUCKS TO: 2025
FACTOR = 1.25

```
                          291   479
                           v     ^
253 <                                <   0
415 >                                >   0
                           v     ^
                          200   226
```

ADJUSTED GROWTH (PCE'S): 2000 TO 2030
10 MINIMUM GROWTH %

```
                          290   480
                           v     ^
250 <        IN =         930 <       0
410 >        OUT =        930 >       0
                           v     ^
                          200   230
```

OPENING YEAR GROWTH: 2011 TO 2023
12 YEARS

```
                          120   190
                           v     ^
100 <                                <   0
160 >                                >   0
                           v     ^
                          80    90
```

INITIAL OPENING YEAR VOLUMES:
2023

```
                          750   650
                           v     ^
290 <        IN =         1670 <      0
370 >        OUT =        1660 >      0
                           v     ^
                          720   550
```

BALANCED OPENING YEAR VOLUMES:
2023

```
                          750   650
                           v     ^
290 <        IN =         1670 <      0
370 >        OUT =        1660 >      0
                           v     ^
                          720   550
```

ANDERSON STREET (NS) / PROJECT ENTRANCE (EW)

FUTURE DIRECTIONAL TURN VOLUMES FROM FUTURE DIRECTIONAL LINK VOLUMES

NCHRP 255

OPENING YEAR (2023) TRAFFIC CONDITIONS									
MORNING PEAK HOUR INPUT DATA					EVENING PEAK HOUR INPUT DATA				
APPROACH	TURNING MOVEMENT	BASE YEAR COUNT	APPROACH	OPENING YEAR TOTAL	APPROACH	TURNING MOVEMENT	BASE YEAR COUNT	APPROACH	OPENING YEAR TOTAL
NORTH	LEFT	**155**	SOUTH LEG		NORTH	LEFT	**101**	SOUTH LEG	
BOUND	THRU	**451**	IN ...	**630**	BOUND	THRU	**355**	IN ...	**550**
	RIGHT	**0**	OUT ...	**580**		RIGHT	**0**	OUT ...	**720**
SOUTH	LEFT	**0**	NORTH LEG		SOUTH	LEFT	**0**	NORTH LEG	
BOUND	THRU	**348**	IN ...	**680**	BOUND	THRU	**537**	IN ...	**750**
	RIGHT	**118**	OUT ...	**570**		RIGHT	**89**	OUT ...	**650**
EAST	LEFT	**44**	WEST LEG		EAST	LEFT	**105**	WEST LEG	
BOUND	THRU	**0**	IN ...	**240**	BOUND	THRU	**3**	IN ...	**370**
	RIGHT	**77**	OUT ...	**400**		RIGHT	**105**	OUT ...	**290**
WEST	LEFT	**0**	EAST LEG		WEST	LEFT	**0**	EAST LEG	
BOUND	THRU	**0**	IN ...	**0**	BOUND	THRU	**0**	IN ...	**0**
	RIGHT	**0**	OUT ...	**0**		RIGHT	**0**	OUT ...	**0**

OPENING YEAR (2023) TRAFFIC CONDITIONS									
MORNING PEAK HOUR RESULTS					EVENING PEAK HOUR RESULTS				
APPROACH	TURNING MOVEMENT	BASE YEAR COUNT	OPENING YEAR FORECAST	PEAK - DAILY RELATIONSHIP	APPROACH	TURNING MOVEMENT	BASE YEAR COUNT	OPENING YEAR FORECAST	PEAK - DAILY RELATIONSHIP
NORTH	LEFT	**155**	**169**	NORTH LEG	NORTH	LEFT	**101**	**126**	NORTH LEG
BOUND	THRU	**451**	**462**	RATIO **7.7%**	BOUND	THRU	**355**	**422**	RATIO **8.6%**
	RIGHT	**0**	**0**	ADT 16,200		RIGHT	**0**	**0**	ADT 16,200
SOUTH	LEFT	**0**	**0**	SOUTH LEG	SOUTH	LEFT	**0**	**0**	SOUTH LEG
BOUND	THRU	**348**	**448**	RATIO **8.6%**	BOUND	THRU	**537**	**580**	RATIO **9.0%**
	RIGHT	**118**	**231**	ADT 14,100		RIGHT	**89**	**164**	ADT 14,100
EAST	LEFT	**44**	**108**	EAST LEG	EAST	LEFT	**105**	**228**	EAST LEG
BOUND	THRU	**0**	**0**	RATIO **#DIV/0!**	BOUND	THRU	**3**	**4**	RATIO **#DIV/0!**
	RIGHT	**77**	**132**	ADT 0		RIGHT	**105**	**140**	ADT 0
WEST	LEFT	**0**	**0**	WEST LEG	WEST	LEFT	**0**	**0**	WEST LEG
BOUND	THRU	**0**	**0**	RATIO **9.0%**	BOUND	THRU	**0**	**0**	RATIO **9.3%**
	RIGHT	**0**	**0**	ADT 7,100		RIGHT	**0**	**0**	ADT 7,100

ANDERSON STREET (NS) / STARR STREET (EW)

MORNING PEAK HOUR

EXISTING PEAK HOUR TURNING MOVEMENT VOLUMES (AUTOS):
2011

```
                    0   412   4
                 <     v     >
          0 ^                 ^   12
          0 >                 <    0
          0 v                 v    2
                 <     ^     >
                    0   586   12
```

EXISTING PEAK HOUR COUNT YEAR (AUTOS):
2011

```
                    416   598
                     v     ^
     0 <     IN =   1028 <   14
     0 >    OUT =   1028 >   16
                     v     ^
                    414   598
```

EXISTING PEAK HOUR TURNING MOVEMENT VOLUMES (TRUCKS IN PCE'S):

```
                    0   26   0
                 <     v     >
          0 ^                 ^    2
          0 >                 <    0
          0 v                 v    0
                 <     ^     >
                    0   22   0
```

PCE FACTORS BY AXLE:
2: 1.5 3: 2.0 4+: 3.0

TOTAL EXISTING PEAK HOUR TURNING MOVEMENT VOLUMES (PCES):
2011

```
                    0   438   4
                 <     v     >
          0 ^                 ^   14
          0 >                 <    0
          0 v                 v    2
                 <     ^     >
                    0   608   12
```

EXISTING PEAK PERIOD MODEL YEAR (AUTO):
2000

```
                    176   837
                     v     ^
     0 <     IN =   1013 <    0
     0 >    OUT =   1013 >    0
                     v     ^
                    176   837
```

EXISTING PEAK PERIOD MODEL YEAR (TRUCKS IN PCE'S):
1994

```
                    0   41
                     v     ^
     0 <     IN =     41 <    0
     0 >    OUT =     41 >    0
                     v     ^
                    0   41
```

EXISTING PEAK HOUR MODEL YEAR (PCE'S).
PHF FOR CARS: 0.38
PHF FOR TRUCKS: 0.333

```
                    67   332
                     v     ^
     0 <     IN =    399 <    0
     0 >    OUT =    399 >    0
                     v     ^
                    67   332
```

FUTURE PEAK PERIOD MODEL YEAR (AUTO):
2030

```
                    1113   845
                     v     ^
     0 <     IN =   1958 <    0
     0 >    OUT =   1958 >    0
                     v     ^
                    1113   845
```

FUTURE PEAK PERIOD MODEL YEAR (TRUCKS IN PCE'S):
2020

```
                    45   142
                     v     ^
     0 <     IN =    187 <    0
     0 >    OUT =    187 >    0
                     v     ^
                    45   142
```

FUTURE PEAK HOUR MODEL YEAR (PCE'S):
PHF FOR CARS: 0.38
PHF FOR TRUCKS: 0.333

```
                    438   368
                     v     ^
     0 <     IN =    806 <    0
     0 >    OUT =    806 >    0
                     v     ^
                    438   368
```

RAW GROWTH (PCE'S): 2000 TO 2030
CONVERSION OF TRUCKS TO: 2025
FACTOR = 1.25

```
                    375   45
                     v     ^
     0 <                 <    0
     0 >                 >    0
                     v     ^
                    375   45
```

ADJUSTED GROWTH (PCE'S): 2000 TO 2030
10 MINIMUM GROWTH %

```
                    370   60
                     v     ^
     0 <     IN =    420 <    0
     0 >    OUT =    430 >    0
                     v     ^
                    370   50
```

OPENING YEAR GROWTH: 2011 TO 2023
12 YEARS

```
                    150   20
                     v     ^
     0 <                 <    0
     0 >                 >    0
                     v     ^
                    150   20
```

INITIAL OPENING YEAR VOLUMES:
2023

```
                    590   640
                     v     ^
     0 <     IN =   1250 <   20
     0 >    OUT =   1250 >   20
                     v     ^
                    590   640
```

BALANCED OPENING YEAR VOLUMES:
2023

```
                    590   640
                     v     ^
     0 <     IN =   1250 <   20
     0 >    OUT =   1250 >   20
                     v     ^
                    590   640
```

EVENING PEAK HOUR

EXISTING PEAK HOUR TURNING MOVEMENT VOLUMES (AUTOS):
2011

```
                    0   582   15
                 <     v     >
          0 ^                 ^   27
          0 >                 <    0
          0 v                 v   13
                 <     ^     >
                    0   437   8
```

EXISTING PEAK HOUR COUNT YEAR (AUTOS):
2011

```
                    597   464
                     v     ^
     0 <     IN =   1082 <   40
     0 >    OUT =   1082 >   23
                     v     ^
                    595   445
```

EXISTING PEAK HOUR TURNING MOVEMENT VOLUMES (TRUCKS IN PCE'S):

```
                    0   29   0
                 <     v     >
          0 ^                 ^    0
          0 >                 <    0
          0 v                 v    0
                 <     ^     >
                    0   11   0
```

PCE FACTORS BY AXLE:
2: 1.5 3: 2 4+: 3.0

TOTAL EXISTING PEAK HOUR TURNING MOVEMENT VOLUMES (PCES):
2011

```
                    0   611   15
                 <     v     >
          0 ^                 ^   27
          0 >                 <    0
          0 v                 v   13
                 <     ^     >
                    0   448   8
```

EXISTING PEAK PERIOD MODEL YEAR (AUTO):
2000

```
                    957   742
                     v     ^
     0 <     IN =   1699 <    0
     0 >    OUT =   1699 >    0
                     v     ^
                    957   742
```

EXISTING PEAK PERIOD MODEL YEAR (TRUCKS IN PCE'S):
1994

```
                    26   50
                     v     ^
     0 <     IN =     76 <    0
     0 >    OUT =     76 >    0
                     v     ^
                    26   50
```

EXISTING PEAK HOUR MODEL YEAR (PCE'S):
PHF FOR CARS: 0.28
PHF FOR TRUCKS: 0.25

```
                    274   220
                     v     ^
     0 <     IN =    495 <    0
     0 >    OUT =    495 >    0
                     v     ^
                    274   220
```

FUTURE PEAK PERIOD MODEL YEAR (AUTO):
2030

```
                    1615   1534
                     v     ^
     0 <     IN =   3149 <    0
     0 >    OUT =   3149 >    0
                     v     ^
                    1615   1534
```

FUTURE PEAK PERIOD MODEL YEAR (TRUCKS IN PCE'S):
2020

```
                    78   62
                     v     ^
     0 <     IN =    140 <    0
     0 >    OUT =    140 >    0
                     v     ^
                    78   62
```

FUTURE PEAK HOUR MODEL YEAR (PCE'S):
PHF FOR CARS: 0.28
PHF FOR TRUCKS: 0.25

```
                    472   445
                     v     ^
     0 <     IN =    917 <    0
     0 >    OUT =    917 >    0
                     v     ^
                    472   445
```

RAW GROWTH (PCE'S): 2000 TO 2030
CONVERSION OF TRUCKS TO: 2025
FACTOR = 1.25

```
                    200   226
                     v     ^
     0 <                 <    0
     0 >                 >    0
                     v     ^
                    200   226
```

ADJUSTED GROWTH (PCE'S): 2000 TO 2030
10 MINIMUM GROWTH %

```
                    200   230
                     v     ^
     0 <     IN =    430 <    0
     0 >    OUT =    430 >    0
                     v     ^
                    200   230
```

OPENING YEAR GROWTH: 2011 TO 2023
12 YEARS

```
                    80   90
                     v     ^
     0 <                 <    0
     0 >                 >    0
                     v     ^
                    80   90
```

INITIAL OPENING YEAR VOLUMES:
2023

```
                    710   570
                     v     ^
     0 <     IN =   1300 <   40
     0 >    OUT =   1290 >   20
                     v     ^
                    700   550
```

BALANCED OPENING YEAR VOLUMES:
2023

```
                    710   570
                     v     ^
     0 <     IN =   1300 <   40
     0 >    OUT =   1300 >   20
                     v     ^
                    710   550
```

ANDERSON STREET (NS) / STARR STREET (EW)

FUTURE DIRECTIONAL TURN VOLUMES FROM FUTURE DIRECTIONAL LINK VOLUMES

NCHRP 255

OPENING YEAR (2023) TRAFFIC CONDITIONS									
MORNING PEAK HOUR INPUT DATA					EVENING PEAK HOUR INPUT DATA				
APPROACH	TURNING MOVEMENT	BASE YEAR COUNT	APPROACH	OPENING YEAR TOTAL	APPROACH	TURNING MOVEMENT	BASE YEAR COUNT	APPROACH	OPENING YEAR TOTAL
NORTH	LEFT	**0**	SOUTH LEG		NORTH	LEFT	**0**	SOUTH LEG	
BOUND	THRU	**608**	IN ...	**640**	BOUND	THRU	**448**	IN ...	**550**
	RIGHT	**12**	OUT ...	**590**		RIGHT	**8**	OUT ...	**710**
SOUTH	LEFT	**4**	NORTH LEG		SOUTH	LEFT	**15**	NORTH LEG	
BOUND	THRU	**438**	IN ...	**590**	BOUND	THRU	**611**	IN ...	**710**
	RIGHT	**0**	OUT ...	**640**		RIGHT	**0**	OUT ...	**570**
EAST	LEFT	**0**	WEST LEG		EAST	LEFT	**0**	WEST LEG	
BOUND	THRU	**0**	IN ...	**0**	BOUND	THRU	**0**	IN ...	**0**
	RIGHT	**0**	OUT ...	**0**		RIGHT	**0**	OUT ...	**0**
WEST	LEFT	**2**	EAST LEG		WEST	LEFT	**13**	EAST LEG	
BOUND	THRU	**0**	IN ...	**20**	BOUND	THRU	**0**	IN ...	**40**
	RIGHT	**14**	OUT ...	**20**		RIGHT	**27**	OUT ...	**20**

OPENING YEAR (2023) TRAFFIC CONDITIONS									
MORNING PEAK HOUR RESULTS					EVENING PEAK HOUR RESULTS				
APPROACH	TURNING MOVEMENT	BASE YEAR COUNT	OPENING YEAR FORECAST	PEAK - DAILY RELATIONSHIP	APPROACH	TURNING MOVEMENT	BASE YEAR COUNT	OPENING YEAR FORECAST	PEAK - DAILY RELATIONSHIP
NORTH	LEFT	**0**	**0**	NORTH LEG	NORTH	LEFT	**0**	**0**	NORTH LEG
BOUND	THRU	**608**	**623**	RATIO **8.7%**	BOUND	THRU	**448**	**543**	RATIO **9.1%**
	RIGHT	**12**	**14**	ADT 14,100		RIGHT	**8**	**9**	ADT 14,100
SOUTH	LEFT	**4**	**6**	SOUTH LEG	SOUTH	LEFT	**15**	**16**	SOUTH LEG
BOUND	THRU	**438**	**587**	RATIO **8.8%**	BOUND	THRU	**611**	**697**	RATIO **9.1%**
	RIGHT	**0**	**0**	ADT 13,900		RIGHT	**0**	**0**	ADT 13,900
EAST	LEFT	**0**	**0**	EAST LEG	EAST	LEFT	**0**	**0**	EAST LEG
BOUND	THRU	**0**	**0**	RATIO **5.7%**	BOUND	THRU	**0**	**0**	RATIO **9.4%**
	RIGHT	**0**	**0**	ADT 700		RIGHT	**0**	**0**	ADT 700
WEST	LEFT	**2**	**3**	WEST LEG	WEST	LEFT	**13**	**14**	WEST LEG
BOUND	THRU	**0**	**0**	RATIO **#DIV/0!**	BOUND	THRU	**0**	**0**	RATIO **#DIV/0!**
	RIGHT	**14**	**17**	ADT 0		RIGHT	**27**	**27**	ADT 0

ANDERSON STREET (NS) / BARTON ROAD (EW)

MORNING PEAK HOUR

EXISTING PEAK HOUR TURNING MOVEMENT VOLUMES (AUTOS):

2011

		111	161	119	
		<	v	>	
242 ^				^	171
729 >				<	660
111 v				v	138
		<	^	>	
		82	136	29	

EXISTING PEAK HOUR COUNT YEAR (AUTOS):

2011

			391	549	
			v	^	
853 <		IN =		2689 <	969
1082 >		OUT =		2689 >	877
			v	^	
			410	247	

EXISTING PEAK HOUR TURNING MOVEMENT VOLUMES (TRUCKS IN PCE'S):

		2	6	20	
		<	v	>	
6 ^				^	10
25 >				<	25
5 v				v	5
		<	^	>	
		0	6	3	

PCE FACTORS BY AXLE:
2: 1.5 3: 2.0 4+: 3.0

TOTAL EXISTING PEAK HOUR TURNING MOVEMENT VOLUMES (PCES):

2011

		113	167	139	
		<	v	>	
248 ^				^	181
754 >				<	685
116 v				v	143
		<	^	>	
		82	142	32	

EXISTING PEAK PERIOD MODEL YEAR (AUTO):

2000

			176	837	
			v	^	
1987 <		IN =		4178 <	2180
1150 >		OUT =		4178 >	1071
			v	^	
			283	672	

EXISTING PEAK PERIOD MODEL YEAR (TRUCKS IN PCE'S):

1994

			0	41	
			v	^	
96 <		IN =		248 <	111
111 >		OUT =		247 >	81
			v	^	
			29	26	

EXISTING PEAK HOUR MODEL YEAR (PCE'S):
PHF FOR CARS: 0.38
PHF FOR TRUCKS: 0.333

			67	332	
			v	^	
787 <		IN =		1670 <	865
474 >		OUT =		1670 >	434
			v	^	
			117	264	

FUTURE PEAK PERIOD MODEL YEAR (AUTO):

2030

			1113	845	
			v	^	
2157 <		IN =		6510 <	2228
2693 >		OUT =		6511 >	3001
			v	^	
			508	476	

FUTURE PEAK PERIOD MODEL YEAR (TRUCKS IN PCE'S):

2020

			45	142	
			v	^	
155 <		IN =		469 <	195
107 >		OUT =		470 >	117
			v	^	
			56	122	

FUTURE PEAK HOUR MODEL YEAR (PCE'S):
PHF FOR CARS: 0.38
PHF FOR TRUCKS: 0.333

			438	368	
			v	^	
871 <		IN =		2630 <	912
1059 >		OUT =		2631 >	1179
			v	^	
			212	222	

RAW GROWTH (PCE'S): 2000 TO 2030
CONVERSION OF TRUCKS TO: 2025
FACTOR = 1.25

			375	45	
			v	^	
89 <				<	53
585 >				>	748
			v	^	
			97	-35	

ADJUSTED GROWTH (PCE'S): 2000 TO 2030
10 MINIMUM GROWTH %

			370	60	
			v	^	
90 <		IN =		1050 <	100
580 >		OUT =		1000 >	750
			v	^	
			100	0	

OPENING YEAR GROWTH: 2011 TO 2023
12 YEARS

			150	20	
			v	^	
40 <				<	40
230 >				>	300
			v	^	
			40	0	

INITIAL OPENING YEAR VOLUMES:

2023

			570	590	
			v	^	
920 <		IN =		3230 <	1050
1350 >		OUT =		3210 >	1230
			v	^	
			470	260	

BALANCED OPENING YEAR VOLUMES:

2023

			570	590	
			v	^	
930 <		IN =		3230 <	1050
1350 >		OUT =		3230 >	1240
			v	^	
			470	260	

EVENING PEAK HOUR

EXISTING PEAK HOUR TURNING MOVEMENT VOLUMES (AUTOS):

2011

		257	115	235	
		<	v	>	
152 ^				^	158
800 >				<	766
53 v				v	49
		<	^	>	
		181	128	79	

EXISTING PEAK HOUR COUNT YEAR (AUTOS):

2011

			607	438	
			v	^	
1204 <		IN =		2973 <	973
1005 >		OUT =		2973 >	1114
			v	^	
			217	388	

EXISTING PEAK HOUR TURNING MOVEMENT VOLUMES (TRUCKS IN PCE'S):

		6	5	20	
		<	v	>	
0 ^				^	8
15 >				<	11
0 v				v	5
		<	^	>	
		3	3	0	

PCE FACTORS BY AXLE:
2: 1.5 3: 2 4+: 3.0

TOTAL EXISTING PEAK HOUR TURNING MOVEMENT VOLUMES (PCES):

2011

		263	120	255	
		<	v	>	
152 ^				^	166
815 >				<	777
53 v				v	54
		<	^	>	
		184	131	79	

EXISTING PEAK PERIOD MODEL YEAR (AUTO):

2000

			957	742	
			v	^	
2181 <		IN =		7435 <	2296
3430 >		OUT =		7435 >	3407
			v	^	
			1105	752	

EXISTING PEAK PERIOD MODEL YEAR (TRUCKS IN PCE'S):

1994

			26	50	
			v	^	
37 <		IN =		243 <	52
131 >		OUT =		244 >	121
			v	^	
			36	34	

EXISTING PEAK HOUR MODEL YEAR (PCE'S):
PHF FOR CARS: 0.28
PHF FOR TRUCKS: 0.25

			274	220	
			v	^	
620 <		IN =		2143 <	656
993 >		OUT =		2143 >	984
			v	^	
			318	219	

FUTURE PEAK PERIOD MODEL YEAR (AUTO):

2030

			1615	1534	
			v	^	
4413 <		IN =		10388 <	4177
3683 >		OUT =		10388 >	3847
			v	^	
			594	913	

FUTURE PEAK PERIOD MODEL YEAR (TRUCKS IN PCE'S):

2020

			78	62	
			v	^	
299 <		IN =		736 <	306
307 >		OUT =		731 >	310
			v	^	
			60	45	

FUTURE PEAK HOUR MODEL YEAR (PCE'S):
PHF FOR CARS: 0.28
PHF FOR TRUCKS: 0.25

			472	445	
			v	^	
1310 <		IN =		3093 <	1246
1108 >		OUT =		3091 >	1155
			v	^	
			181	267	

RAW GROWTH (PCE'S): 2000 TO 2030
CONVERSION OF TRUCKS TO: 2025
FACTOR = 1.25

			200	226	
			v	^	
707 <				<	606
126 >				>	182
			v	^	
			-136	49	

ADJUSTED GROWTH (PCE'S): 2000 TO 2030
10 MINIMUM GROWTH %

			200	230	
			v	^	
710 <		IN =		990 <	610
130 >		OUT =		1120 >	180
			v	^	
			0	50	

OPENING YEAR GROWTH: 2011 TO 2023
12 YEARS

			80	90	
			v	^	
280 <				<	240
50 >				>	70
			v	^	
			0	20	

INITIAL OPENING YEAR VOLUMES:

2023

			720	540	
			v	^	
1500 <		IN =		3440 <	1240
1070 >		OUT =		3490 >	1220
			v	^	
			230	410	

BALANCED OPENING YEAR VOLUMES:

2023

			730	540	
			v	^	
1500 <		IN =		3500 <	1260
1090 >		OUT =		3490 >	1220
			v	^	
			230	420	

ANDERSON STREET (NS) / BARTON ROAD (EW)

FUTURE DIRECTIONAL TURN VOLUMES FROM FUTURE DIRECTIONAL LINK VOLUMES

NCHRP 255

OPENING YEAR (2023) TRAFFIC CONDITIONS									
MORNING PEAK HOUR INPUT DATA					EVENING PEAK HOUR INPUT DATA				
APPROACH	TURNING MOVEMENT	BASE YEAR COUNT	APPROACH	OPENING YEAR TOTAL	APPROACH	TURNING MOVEMENT	BASE YEAR COUNT	APPROACH	OPENING YEAR TOTAL
NORTH	LEFT	**82**	SOUTH LEG		NORTH	LEFT	**184**	SOUTH LEG	
BOUND	THRU	**142**	IN ...	**260**	BOUND	THRU	**131**	IN ...	**420**
	RIGHT	**32**	OUT ...	**470**		RIGHT	**79**	OUT ...	**230**
SOUTH	LEFT	**139**	NORTH LEG		SOUTH	LEFT	**255**	NORTH LEG	
BOUND	THRU	**167**	IN ...	**570**	BOUND	THRU	**120**	IN ...	**730**
	RIGHT	**113**	OUT ...	**590**		RIGHT	**263**	OUT ...	**540**
EAST	LEFT	**248**	WEST LEG		EAST	LEFT	**152**	WEST LEG	
BOUND	THRU	**754**	IN ...	**1,350**	BOUND	THRU	**815**	IN ...	**1,090**
	RIGHT	**116**	OUT ...	**930**		RIGHT	**53**	OUT ...	**1,500**
WEST	LEFT	**143**	EAST LEG		WEST	LEFT	**54**	EAST LEG	
BOUND	THRU	**685**	IN ...	**1,050**	BOUND	THRU	**777**	IN ...	**1,260**
	RIGHT	**181**	OUT ...	**1,240**		RIGHT	**166**	OUT ...	**1,220**

OPENING YEAR (2023) TRAFFIC CONDITIONS									
MORNING PEAK HOUR RESULTS					EVENING PEAK HOUR RESULTS				
APPROACH	TURNING MOVEMENT	BASE YEAR COUNT	OPENING YEAR FORECAST	PEAK - DAILY RELATIONSHIP	APPROACH	TURNING MOVEMENT	BASE YEAR COUNT	OPENING YEAR FORECAST	PEAK - DAILY RELATIONSHIP
NORTH	LEFT	**82**	**85**	NORTH LEG	NORTH	LEFT	**184**	**197**	NORTH LEG
BOUND	THRU	**142**	**147**	RATIO **8.4%**	BOUND	THRU	**131**	**144**	RATIO **9.1%**
	RIGHT	**32**	**40**	ADT 13,900		RIGHT	**79**	**82**	ADT 13,900
SOUTH	LEFT	**139**	**222**	SOUTH LEG	SOUTH	LEFT	**255**	**286**	SOUTH LEG
BOUND	THRU	**167**	**207**	RATIO **9.9%**	BOUND	THRU	**120**	**122**	RATIO **8.8%**
	RIGHT	**113**	**141**	ADT 7,500		RIGHT	**263**	**320**	ADT 7,500
EAST	LEFT	**248**	**257**	EAST LEG	EAST	LEFT	**152**	**179**	EAST LEG
BOUND	THRU	**754**	**978**	RATIO **8.2%**	BOUND	THRU	**815**	**857**	RATIO **8.9%**
	RIGHT	**116**	**116**	ADT 27,800		RIGHT	**53**	**55**	ADT 27,800
WEST	LEFT	**143**	**147**	WEST LEG	WEST	LEFT	**54**	**57**	WEST LEG
BOUND	THRU	**685**	**710**	RATIO **7.9%**	BOUND	THRU	**777**	**983**	RATIO **9.0%**
	RIGHT	**181**	**192**	ADT 28,900		RIGHT	**166**	**217**	ADT 28,900

APPENDIX D

Explanation and Calculation of Intersection Delay

EXPLANATION AND CALCULATION OF INTERSECTION LEVEL OF SERVICE USING DELAY METHODOLOGY

The levels of service at the unsignalized and signalized intersections are calculated using the delay methodology in the 2000 Highway Capacity Manual. This methodology views an intersection as consisting of several lane groups. A lane group is a set of lanes serving a movement. If there are two northbound left turn lanes, then the lane group serving the northbound left turn movement has two lanes. Similarly, there may be three lanes in the lane group serving the northbound through movement, one lane in the lane group serving the northbound right turn movement, and so forth. It is also possible for one lane to serve two lane groups. A shared lane might result in there being 1.5 lanes in the northbound left turn lane group and 2.5 lanes in the northbound through lane group.

For each lane group, there is a capacity. That capacity is calculated by multiplying the number of lanes in the lane group times a theoretical maximum lane capacity per lane time's 12 adjustment factors.

Each of the 12 adjustment factors has a value of approximately 1.00. A value less than 1.00 is generally assigned when a less than desirable condition occurs.

The 12 adjustment factors are as follows:

1. Peak hour factor (to account for peaking within the peak hour)
2. Lane utilization factor (to account for not all lanes loading equally)
3. Lane width
4. Percent of heavy trucks
5. Approach grade
6. Parking
7. Bus stops at intersections
8. Area type (CBD or other)
9. Right turns
10. Left turns

11. Pedestrian activity

12. Signal progression

The maximum theoretical lane capacity and the 12 adjustment factors for it are all unknowns for which approximate estimates have been recommended in the 2000 Highway Capacity Manual. For the most part, the recommended values are not based on statistical analysis but rather on educated estimates. However, it is possible to use the delay method and get reasonable results as will be discussed below.

Once the lane group volume is known and the lane group capacity is known, a volume to capacity ratio can be calculated for the lane group.

With a volume to capacity ratio calculated, average delay per vehicle in a lane group can be estimated. The average delay per vehicle in a lane group is calculated using a complex formula provided by the 2000 Highway Capacity Manual, which can be simplified and described as follows:

Delay per vehicle in a lane group is a function of the following:

1. Cycle length

2. Amount of red time faced by a lane group

3. Amount of yellow time for that lane group

4. The volume to capacity ratio of the lane group

The average delay per vehicle for each lane group is calculated, and eventually an overall average delay for all vehicles entering the intersection is calculated. This average delay per vehicle is then used to judge Level of Service. The Level of Services are defined in the table that follows this discussion.

Experience has shown that when a maximum lane capacity of 1,900 vehicles per hour is used (as recommended in the 2000 Highway Capacity Manual), little or no yellow time penalty is used, and none of the 12 penalty factors are applied, calculated delay is realistic. The delay calculation for instance assumes that yellow time is totally unused. Yet experience shows that most of the yellow time is used.

An idiosyncrasy of the delay methodology is that it is possible to add traffic to an intersection and reduce the average total delay per vehicle. If the average total delay is 30 seconds per vehicle for all vehicles traveling through an intersection, and traffic is

added to a movement that has an average total delay of 15 seconds per vehicle, then the overall average total delay is reduced.
The delay calculation for a lane group is based on a concept that the delay is a function of the amount of unused capacity available. As the volume approaches capacity and there is no more unused capacity available, then the delay rapidly increases. Delay is not proportional to volume, but rather increases rapidly as the unused capacity approaches zero.

Because delay is not linearly related to volumes, the delay does not reflect how close an intersection is to overloading. If an intersection is operating at Level of Service C and has an average total delay of 18 seconds per vehicle, you know very little as to what percent the traffic can increase before Level of Service E is reached.

LEVEL OF SERVICE DESCRIPTION[1]

Level Of Service	Description	Average Total Delay Per Vehicle (Seconds)	
		Signalized	Unsignalized
A	Level of Service A occurs when progression is extremely favorable and most vehicles arrive during the green phase. Most vehicles do not stop at all. Short cycle lengths may also contribute to low delay.	0 to 10.00	0 to 10.00
B	Level of Service B generally occurs with good progression and/or short cycle lengths. More vehicles stop than for Level of Service A, causing higher levels of average total delay.	10.01 to 20.00	10.01 to 15.00
C	Level of Service C generally results when there is fair progression and/or longer cycle lengths. Individual cycle failures may begin to appear in this level. The number of vehicles stopping is significant at this level, although many still pass through the intersection without stopping.	20.01 to 35.00	15.01 to 25.00
D	Level of Service D generally results in noticeable congestion. Longer delays may result from some combination of unfavorable progression, long cycle lengths, or high volume to capacity ratios. Many vehicles stop, and the proportion of vehicles not stopping declines. Individual cycle failures are noticeable.	35.01 to 55.00	25.01 to 35.00
E	Level of Service E is considered to be the limit of acceptable delay. These high delay values generally indicate poor progression, long cycle lengths, and high volume to capacity ratios. Individual cycle failures are frequent occurrences.	55.01 to 80.00	35.01 to 50.00
F	Level of Service F is considered to be unacceptable to most drivers. This condition often occurs with oversaturation, i.e., when arrival flow rates exceed the capacity of the intersection. It may also occur at high volume to capacity ratios below 1.00 with many individual cycle failures. Poor progression and long cycle lengths may also be major contributing causes to such delay levels.	80.01 and up	50.01 and up

[1] Source: Highway Capacity Manual Special Report 209, Transportation Research Board, National Research Council, Washington, D.C., 2000.

Existing

LLUH Campus Transformation Project
Existing
Morning Peak Hour

Level Of Service Computation Report
2000 HCM 4-Way Stop Method (Base Volume Alternative)

Intersection #1 Campus Street (NS) at Stewart Street (EW)

Cycle (sec):	0	Critical Vol./Cap.(X):	0.851
Loss Time (sec):	0 (Y+R=4.0 sec)	Average Delay (sec/veh):	22.8
Optimal Cycle:	0	Level Of Service:	C

Approach:	North Bound			South Bound			East Bound			West Bound		
Movement:	L - T - R			L - T - R			L - T - R			L - T - R		
Control:	Stop Sign			Stop Sign			Stop Sign			Stop Sign		
Rights:	Include			Include			Include			Include		
Min. Green:	0	0	0	0	0	0	0	0	0	0	0	0
Lanes:	0 1	0 0	1	0 0	1! 0	0	0 0	1! 0	0	0 1	0 0	1
Volume Module:												
Base Vol:	11	263	225	9	36	1	31	54	20	322	38	281
Growth Adj:	1.00	1.00	1.00	1.00	1.00	1.00	1.00	1.00	1.00	1.00	1.00	1.00
Initial Bse:	11	263	225	9	36	1	31	54	20	322	38	281
User Adj:	1.00	1.00	1.00	1.00	1.00	1.00	1.00	1.00	1.00	1.00	1.00	1.00
PHF Adj:	0.79	0.79	0.79	0.85	0.85	0.85	0.68	0.68	0.68	0.85	0.85	0.85
PHF Volume:	14	334	286	11	43	1	46	80	29	381	45	332
Reduct Vol:	0	0	0	0	0	0	0	0	0	0	0	0
Reduced Vol:	14	334	286	11	43	1	46	80	29	381	45	332
PCE Adj:	1.00	1.00	1.00	1.00	1.00	1.00	1.00	1.00	1.00	1.00	1.00	1.00
MLF Adj:	1.00	1.00	1.00	1.00	1.00	1.00	1.00	1.00	1.00	1.00	1.00	1.00
FinalVolume:	14	334	286	11	43	1	46	80	29	381	45	332
Saturation Flow Module:												
Adjustment:	1.00	1.00	1.00	1.00	1.00	1.00	1.00	1.00	1.00	1.00	1.00	1.00
Lanes:	0.04	0.96	1.00	0.20	0.78	0.02	0.30	0.51	0.19	0.89	0.11	1.00
Final Sat.:	20	486	562	85	341	9	142	248	92	447	53	592
Capacity Analysis Module:												
Vol/Sat:	0.69	0.69	0.51	0.12	0.12	0.12	0.32	0.32	0.32	0.85	0.85	0.56
Crit Moves:		****			****			****			****	
Delay/Veh:	23.1	23.1	15.1	11.8	11.8	11.8	13.5	13.5	13.5	37.9	37.9	15.9
Delay Adj:	1.00	1.00	1.00	1.00	1.00	1.00	1.00	1.00	1.00	1.00	1.00	1.00
AdjDel/Veh:	23.1	23.1	15.1	11.8	11.8	11.8	13.5	13.5	13.5	37.9	37.9	15.9
LOS by Move:	C	C	C	B	B	B	B	B	B	E	E	C
ApproachDel:		19.5			11.8			13.5			28.3	
Delay Adj:		1.00			1.00			1.00			1.00	
ApprAdjDel:		19.5			11.8			13.5			28.3	
LOS by Appr:		C			B			B			D	
AllWayAvgQ:	1.9	1.9	0.9	0.1	0.1	0.1	0.4	0.4	0.4	3.9	3.9	1.2

Note: Queue reported is the number of cars per lane.

LLUH Campus Transformation Project
Existing
Evening Peak Hour

Level Of Service Computation Report
2000 HCM 4-Way Stop Method (Base Volume Alternative)

Intersection #1 Campus Street (NS) at Stewart Street (EW)

Cycle (sec):	0	Critical Vol./Cap.(X):	0.720
Loss Time (sec):	0 (Y+R=4.0 sec)	Average Delay (sec/veh):	17.2
Optimal Cycle:	0	Level Of Service:	C

Approach:	North Bound			South Bound			East Bound			West Bound		
Movement:	L -	T -	R	L -	T -	R	L -	T -	R	L -	T -	R
Control:	Stop Sign			Stop Sign			Stop Sign			Stop Sign		
Rights:	Include			Include			Include			Include		
Min. Green:	0	0	0	0	0	0	0	0	0	0	0	0
Lanes:	0 1	0 0	1	0 0	1! 0	0	0 0	1! 0	0	0 1	0 0	1
Volume Module:												
Base Vol:	13	80	237	119	223	10	5	31	25	195	58	100
Growth Adj:	1.00	1.00	1.00	1.00	1.00	1.00	1.00	1.00	1.00	1.00	1.00	1.00
Initial Bse:	13	80	237	119	223	10	5	31	25	195	58	100
User Adj:	1.00	1.00	1.00	1.00	1.00	1.00	1.00	1.00	1.00	1.00	1.00	1.00
PHF Adj:	0.94	0.94	0.94	0.91	0.91	0.91	0.66	0.66	0.66	0.89	0.89	0.89
PHF Volume:	14	85	251	130	244	11	8	47	38	219	65	112
Reduct Vol:	0	0	0	0	0	0	0	0	0	0	0	0
Reduced Vol:	14	85	251	130	244	11	8	47	38	219	65	112
PCE Adj:	1.00	1.00	1.00	1.00	1.00	1.00	1.00	1.00	1.00	1.00	1.00	1.00
MLF Adj:	1.00	1.00	1.00	1.00	1.00	1.00	1.00	1.00	1.00	1.00	1.00	1.00
FinalVolume:	14	85	251	130	244	11	8	47	38	219	65	112
Saturation Flow Module:												
Adjustment:	1.00	1.00	1.00	1.00	1.00	1.00	1.00	1.00	1.00	1.00	1.00	1.00
Lanes:	0.14	0.86	1.00	0.34	0.63	0.03	0.08	0.51	0.41	0.77	0.23	1.00
Final Sat.:	71	439	574	181	338	15	36	225	181	375	111	569
Capacity Analysis Module:												
Vol/Sat:	0.19	0.19	0.44	0.72	0.72	0.72	0.21	0.21	0.21	0.58	0.58	0.20
Crit Moves:			****		****		****				****	
Delay/Veh:	11.0	11.0	12.9	23.9	23.9	23.9	11.9	11.9	11.9	18.7	18.7	10.2
Delay Adj:	1.00	1.00	1.00	1.00	1.00	1.00	1.00	1.00	1.00	1.00	1.00	1.00
AdjDel/Veh:	11.0	11.0	12.9	23.9	23.9	23.9	11.9	11.9	11.9	18.7	18.7	10.2
LOS by Move:	B	B	B	C	C	C	B	B	B	C	C	B
ApproachDel:		12.4			23.9			11.9			16.2	
Delay Adj:		1.00			1.00			1.00			1.00	
ApprAdjDel:		12.4			23.9			11.9			16.2	
LOS by Appr:		B			C			B			C	
AllWayAvgQ:	0.2	0.2	0.7	2.1	2.1	2.1	0.2	0.2	0.2	1.2	1.2	0.2

Note: Queue reported is the number of cars per lane.

LLUH Campus Transformation Project
Existing
Morning Peak Hour

Level Of Service Computation Report
2000 HCM 4-Way Stop Method (Base Volume Alternative)

Intersection #2 Campus Street (NS) at University Avenue (EW)

Cycle (sec):	0	Critical Vol./Cap.(X):	0.710
Loss Time (sec):	0 (Y+R=4.0 sec)	Average Delay (sec/veh):	17.6
Optimal Cycle:	0	Level Of Service:	C

Approach:	North Bound			South Bound			East Bound			West Bound		
Movement:	L -	T -	R	L -	T -	R	L -	T -	R	L -	T -	R
Control:	Stop Sign			Stop Sign			Stop Sign			Stop Sign		
Rights:	Include			Include			Include			Include		
Min. Green:	0	0	0	0	0	0	0	0	0	0	0	0
Lanes:	0 1	0 0	0	0 0	0 1	0	0 0	1! 0	0	0 0	0 0	0
Volume Module:												
Base Vol:	43	298	0	0	153	171	226	0	68	0	0	0
Growth Adj:	1.00	1.00	1.00	1.00	1.00	1.00	1.00	1.00	1.00	1.00	1.00	1.00
Initial Bse:	43	298	0	0	153	171	226	0	68	0	0	0
User Adj:	1.00	1.00	1.00	1.00	1.00	1.00	1.00	1.00	1.00	1.00	1.00	1.00
PHF Adj:	0.76	0.76	0.76	0.84	0.84	0.84	0.82	0.82	0.82	1.00	1.00	1.00
PHF Volume:	57	392	0	0	183	205	275	0	83	0	0	0
Reduct Vol:	0	0	0	0	0	0	0	0	0	0	0	0
Reduced Vol:	57	392	0	0	183	205	275	0	83	0	0	0
PCE Adj:	1.00	1.00	1.00	1.00	1.00	1.00	1.00	1.00	1.00	1.00	1.00	1.00
MLF Adj:	1.00	1.00	1.00	1.00	1.00	1.00	1.00	1.00	1.00	1.00	1.00	1.00
FinalVolume:	57	392	0	0	183	205	275	0	83	0	0	0
Saturation Flow Module:												
Adjustment:	1.00	1.00	1.00	1.00	1.00	1.00	1.00	1.00	1.00	1.00	1.00	1.00
Lanes:	0.13	0.87	0.00	0.00	0.47	0.53	0.77	0.00	0.23	0.00	0.00	0.00
Final Sat.:	80	552	0	0	307	344	447	0	135	0	0	0
Capacity Analysis Module:												
Vol/Sat:	0.71	0.71	xxxx	xxxx	0.60	0.60	0.61	xxxx	0.61	xxxx	xxxx	xxxx
Crit Moves:		****			****				****			
Delay/Veh:	20.1	20.1	0.0	0.0	15.3	15.3	16.9	0.0	16.9	0.0	0.0	0.0
Delay Adj:	1.00	1.00	1.00	1.00	1.00	1.00	1.00	1.00	1.00	1.00	1.00	1.00
AdjDel/Veh:	20.1	20.1	0.0	0.0	15.3	15.3	16.9	0.0	16.9	0.0	0.0	0.0
LOS by Move:	C	C	*	*	C	C	C	*	C	*	*	*
ApproachDel:		20.1			15.3			16.9			xxxxxx	
Delay Adj:		1.00			1.00			1.00			xxxxx	
ApprAdjDel:		20.1			15.3			16.9			xxxxxx	
LOS by Appr:		C			C			C			*	
AllWayAvgQ:	2.0	2.0	2.0	1.3	1.3	1.3	1.3	1.3	1.3	0.0	0.0	0.0

Note: Queue reported is the number of cars per lane.

LLUH Campus Transformation Project
Existing
Evening Peak Hour

Level Of Service Computation Report
2000 HCM 4-Way Stop Method (Base Volume Alternative)

Intersection #2 Campus Street (NS) at University Avenue (EW)

Cycle (sec):	0	Critical Vol./Cap.(X):	0.614
Loss Time (sec):	0 (Y+R=4.0 sec)	Average Delay (sec/veh):	12.5
Optimal Cycle:	0	Level Of Service:	B

Approach:	North Bound				South Bound				East Bound				West Bound			
Movement:	L	T		R	L	T		R	L	T		R	L	T		R
Control:	Stop Sign				Stop Sign				Stop Sign				Stop Sign			
Rights:	Include				Include				Include				Include			
Min. Green:	0	0	0		0	0	0		0	0	0		0	0	0	
Lanes:	0	1	0	0	0	0	1	0	0	0	1!	0	0	0	0	0
Volume Module:																
Base Vol:	70	147	0	0	223	212	129	0	54	0	0	0				
Growth Adj:	1.00	1.00	1.00	1.00	1.00	1.00	1.00	1.00	1.00	1.00	1.00	1.00				
Initial Bse:	70	147	0	0	223	212	129	0	54	0	0	0				
User Adj:	1.00	1.00	1.00	1.00	1.00	1.00	1.00	1.00	1.00	1.00	1.00	1.00				
PHF Adj:	0.89	0.89	0.89	0.91	0.91	0.91	0.82	0.82	0.82	1.00	1.00	1.00				
PHF Volume:	79	166	0	0	244	232	157	0	66	0	0	0				
Reduct Vol:	0	0	0	0	0	0	0	0	0	0	0	0				
Reduced Vol:	79	166	0	0	244	232	157	0	66	0	0	0				
PCE Adj:	1.00	1.00	1.00	1.00	1.00	1.00	1.00	1.00	1.00	1.00	1.00	1.00				
MLF Adj:	1.00	1.00	1.00	1.00	1.00	1.00	1.00	1.00	1.00	1.00	1.00	1.00				
FinalVolume:	79	166	0	0	244	232	157	0	66	0	0	0				
Saturation Flow Module:																
Adjustment:	1.00	1.00	1.00	1.00	1.00	1.00	1.00	1.00	1.00	1.00	1.00	1.00				
Lanes:	0.32	0.68	0.00	0.00	0.51	0.49	0.70	0.00	0.30	0.00	0.00	0.00				
Final Sat.:	218	458	0	0	397	378	435	0	182	0	0	0				
Capacity Analysis Module:																
Vol/Sat:	0.36	0.36	xxxx	xxxx	0.61	0.61	0.36	xxxx	0.36	xxxx	xxxx	xxxx				
Crit Moves:	****				****				****							
Delay/Veh:	10.8	10.8	0.0	0.0	14.1	14.1	11.1	0.0	11.1	0.0	0.0	0.0				
Delay Adj:	1.00	1.00	1.00	1.00	1.00	1.00	1.00	1.00	1.00	1.00	1.00	1.00				
AdjDel/Veh:	10.8	10.8	0.0	0.0	14.1	14.1	11.1	0.0	11.1	0.0	0.0	0.0				
LOS by Move:	B	B	*	*	B	B	B	*	B	*	*	*				
ApproachDel:	10.8				14.1			11.1		xxxxxx						
Delay Adj:	1.00				1.00			1.00		xxxxx						
ApprAdjDel:	10.8				14.1			11.1		xxxxxx						
LOS by Appr:	B				B			B		*						
AllWayAvgQ:	0.5	0.5	0.5	1.4	1.4	1.4	0.5	0.5	0.5	0.0	0.0	0.0				

Note: Queue reported is the number of cars per lane.

LLUH Campus Transformation Project
Existing
Morning Peak Hour

Level Of Service Computation Report
2000 HCM Operations Method (Base Volume Alternative)

Intersection #3 Campus Street (NS) at Prospect Avenue (EW)

Cycle (sec): 105 Critical Vol./Cap.(X): 0.325
Loss Time (sec): 4 (Y+R=3.0 sec) Average Delay (sec/veh): 6.1
Optimal Cycle: OPTIMIZED Level Of Service: A

Approach:	North Bound			South Bound			East Bound			West Bound		
Movement:	L -	T -	R	L -	T -	R	L -	T -	R	L -	T -	R
Control:	Permitted			Permitted			Permitted			Permitted		
Rights:	Include			Include			Include			Include		
Min. Green:	18	18	18	18	18	18	21	21	21	0	0	0
Lanes:	1 0	1 0	0	0 0	1 0	1	0 0	1! 0	0	0 0	0 0	0
Volume Module:												
Base Vol:	172	405	0	0	157	35	9	0	44	0	0	0
Growth Adj:	1.00	1.00	1.00	1.00	1.00	1.00	1.00	1.00	1.00	1.00	1.00	1.00
Initial Bse:	172	405	0	0	157	35	9	0	44	0	0	0
User Adj:	1.00	1.00	1.00	1.00	1.00	1.00	1.00	1.00	1.00	1.00	1.00	1.00
PHF Adj:	0.82	0.82	0.82	0.89	0.89	0.89	0.77	0.77	0.77	1.00	1.00	1.00
PHF Volume:	210	494	0	0	176	39	12	0	58	0	0	0
Reduct Vol:	0	0	0	0	0	0	0	0	0	0	0	0
Reduced Vol:	210	494	0	0	176	39	12	0	58	0	0	0
PCE Adj:	1.00	1.00	1.00	1.00	1.00	1.00	1.00	1.00	1.00	1.00	1.00	1.00
MLF Adj:	1.00	1.00	1.00	1.00	1.00	1.00	1.00	1.00	1.00	1.00	1.00	1.00
FinalVolume:	210	494	0	0	176	39	12	0	58	0	0	0
Saturation Flow Module:												
Sat/Lane:	1800	1800	1800	1800	1800	1800	1800	1800	1800	1800	1800	1800
Adjustment:	0.94	1.00	1.00	0.94	1.00	1.00	1.00	1.00	1.00	0.94	1.00	1.00
Lanes:	1.00	1.00	0.00	0.00	1.00	1.00	0.17	0.00	0.83	0.00	0.00	0.00
Final Sat.:	1700	1800	0	0	1800	1800	306	0	1494	0	0	0
Capacity Analysis Module:												
Vol/Sat:	0.12	0.27	0.00	0.00	0.10	0.02	0.04	0.00	0.04	0.00	0.00	0.00
Crit Moves:		****					****					
Green/Cycle:	0.76	0.76	0.00	0.00	0.76	0.76	0.20	0.00	0.20	0.00	0.00	0.00
Volume/Cap:	0.16	0.36	0.00	0.00	0.13	0.03	0.19	0.00	0.19	0.00	0.00	0.00
Delay/Veh:	3.5	4.3	0.0	0.0	3.3	3.1	35.2	0.0	35.2	0.0	0.0	0.0
User DelAdj:	1.00	1.00	1.00	1.00	1.00	1.00	1.00	1.00	1.00	1.00	1.00	1.00
AdjDel/Veh:	3.5	4.3	0.0	0.0	3.3	3.1	35.2	0.0	35.2	0.0	0.0	0.0
LOS by Move:	A	A	A	A	A	A	D	A	D	A	A	A
HCM2kAvgQ:	2	5	0	0	1	0	2	0	2	0	0	0

Note: Queue reported is the number of cars per lane.

LLUH Campus Transformation Project
Existing
Evening Peak Hour

Level Of Service Computation Report
2000 HCM Operations Method (Base Volume Alternative)

****

Intersection #3 Campus Street (NS) at Prospect Avenue (EW)

****

Cycle (sec): 60 Critical Vol./Cap.(X): 0.284
Loss Time (sec): 4 (Y+R=3.0 sec) Average Delay (sec/veh): 8.9
Optimal Cycle: OPTIMIZED Level Of Service: A

****

Approach:	North Bound			South Bound			East Bound			West Bound		
Movement:	L -	T -	R	L -	T -	R	L -	T -	R	L -	T -	R
Control:	Permitted			Permitted			Permitted			Permitted		
Rights:	Include			Include			Include			Include		
Min. Green:	18	18	18	18	18	18	21	21	21	0	0	0
Lanes:	1 0	1 0	0	0 0	1 0	1	0 0	1! 0	0	0 0	0 0	0
Volume Module:												
Base Vol:	24	176	0	0	269	22	9	0	136	0	0	0
Growth Adj:	1.00	1.00	1.00	1.00	1.00	1.00	1.00	1.00	1.00	1.00	1.00	1.00
Initial Bse:	24	176	0	0	269	22	9	0	136	0	0	0
User Adj:	1.00	1.00	1.00	1.00	1.00	1.00	1.00	1.00	1.00	1.00	1.00	1.00
PHF Adj:	0.92	0.92	0.92	0.99	0.99	0.99	0.71	0.71	0.71	1.00	1.00	1.00
PHF Volume:	26	191	0	0	273	22	13	0	191	0	0	0
Reduct Vol:	0	0	0	0	0	0	0	0	0	0	0	0
Reduced Vol:	26	191	0	0	273	22	13	0	191	0	0	0
PCE Adj:	1.00	1.00	1.00	1.00	1.00	1.00	1.00	1.00	1.00	1.00	1.00	1.00
MLF Adj:	1.00	1.00	1.00	1.00	1.00	1.00	1.00	1.00	1.00	1.00	1.00	1.00
FinalVolume:	26	191	0	0	273	22	13	0	191	0	0	0
Saturation Flow Module:												
Sat/Lane:	1800	1800	1800	1800	1800	1800	1800	1800	1800	1800	1800	1800
Adjustment:	0.94	1.00	1.00	0.94	1.00	1.00	1.00	1.00	1.00	0.94	1.00	1.00
Lanes:	1.00	1.00	0.00	0.00	1.00	1.00	0.06	0.00	0.94	0.00	0.00	0.00
Final Sat.:	1700	1800	0	0	1800	1800	112	0	1688	0	0	0
Capacity Analysis Module:												
Vol/Sat:	0.02	0.11	0.00	0.00	0.15	0.01	0.11	0.00	0.11	0.00	0.00	0.00
Crit Moves:					****		****					
Green/Cycle:	0.53	0.53	0.00	0.00	0.53	0.53	0.40	0.00	0.40	0.00	0.00	0.00
Volume/Cap:	0.03	0.20	0.00	0.00	0.28	0.02	0.28	0.00	0.28	0.00	0.00	0.00
Delay/Veh:	6.6	7.4	0.0	0.0	7.8	6.6	12.4	0.0	12.4	0.0	0.0	0.0
User DelAdj:	1.00	1.00	1.00	1.00	1.00	1.00	1.00	1.00	1.00	1.00	1.00	1.00
AdjDel/Veh:	6.6	7.4	0.0	0.0	7.8	6.6	12.4	0.0	12.4	0.0	0.0	0.0
LOS by Move:	A	A	A	A	A	A	B	A	B	A	A	A
HCM2kAvgQ:	0	2	0	0	3	0	3	0	3	0	0	0

****

Note: Queue reported is the number of cars per lane.

****

LLUH Campus Transformation Project
Existing
Morning Peak Hour

Level Of Service Computation Report
2000 HCM Unsignalized Method (Base Volume Alternative)

****

Intersection #4 Campus Street (NS) at San Juan Street (EW)

****

Average Delay (sec/veh): 0.6 Worst Case Level Of Service: B[11.6]

****

Approach:	North Bound				South Bound				East Bound				West Bound			
Movement:	L	- T	-	R	L	- T	-	R	L	- T	-	R	L	- T	-	R
Control:	Uncontrolled				Uncontrolled				Stop Sign				Stop Sign			
Rights:	Include				Include				Include				Include			
Lanes:	0 1	0	0	0	0 0	1	1	0	0 0	1!	0	0	0 0	0	0	0
Volume Module:																
Base Vol:	47	757		0	0	160		6	3		0	14	0		0	0
Growth Adj:	1.00	1.00		1.00	1.00	1.00		1.00	1.00		1.00	1.00	1.00		1.00	1.00
Initial Bse:	47	757		0	0	160		6	3		0	14	0		0	0
User Adj:	1.00	1.00		1.00	1.00	1.00		1.00	1.00		1.00	1.00	1.00		1.00	1.00
PHF Adj:	0.85	0.85		0.85	0.77	0.77		0.77	0.85		0.85	0.85	1.00		1.00	1.00
PHF Volume:	55	891		0	0	208		8	4		0	16	0		0	0
Reduct Vol:	0	0		0	0	0		0	0		0	0	0		0	0
FinalVolume:	55	891		0	0	208		8	4		0	16	0		0	0
Critical Gap Module:																
Critical Gp:	4.1	xxxx	xxxxx	xxxxx	xxxx	xxxxx			6.4	6.5		6.2	xxxxx	xxxx	xxxxx	
FollowUpTim:	2.2	xxxx	xxxxx	xxxxx	xxxx	xxxxx			3.5	4.0		3.3	xxxxx	xxxx	xxxxx	
Capacity Module:																
Cnflict Vol:	216	xxxx	xxxxx	xxxx	xxxx	xxxxx			1213	1213		108	xxxx	xxxx	xxxxx	
Potent Cap.:	1366	xxxx	xxxxx	xxxx	xxxx	xxxxx			203	183		951	xxxx	xxxx	xxxxx	
Move Cap.:	1366	xxxx	xxxxx	xxxx	xxxx	xxxxx			196	176		951	xxxx	xxxx	xxxxx	
Volume/Cap:	0.04	xxxx	xxxx	xxxx	xxxx	xxxx			0.02	0.00		0.02	xxxx	xxxx	xxxx	
Level Of Service Module:																
2Way95thQ:	0.1	xxxx	xxxxx	xxxx	xxxx	xxxxx			xxxx	xxxx	xxxxx		xxxx	xxxx	xxxxx	
Control Del:	7.7	xxxx	xxxxx	xxxxx	xxxx	xxxxx			xxxxx	xxxx	xxxxx		xxxxx	xxxx	xxxxx	
LOS by Move:	A	*	*	*	*	*			*	*	*		*	*	*	
Movement:	LT -	LTR -	RT	LT -	LTR -	RT			LT -	LTR -	RT		LT -	LTR -	RT	
Shared Cap.:	xxxx	xxxx	xxxxx	xxxx	xxxx	xxxxx			xxxx	567	xxxxx		xxxx	xxxx	xxxxx	
SharedQueue:	0.1	xxxx	xxxxx	xxxxx	xxxx	xxxxx			xxxxx	0.1	xxxxx		xxxxx	xxxx	xxxxx	
Shrd ConDel:	7.7	xxxx	xxxxx	xxxxx	xxxx	xxxxx			xxxxx	11.6	xxxxx		xxxxx	xxxx	xxxxx	
Shared LOS:	A	*	*	*	*	*			*	B	*		*	*	*	
ApproachDel:	xxxxxx			xxxxxx						11.6			xxxxxx			
ApproachLOS:		*			*					B				*		

****

Note: Queue reported is the number of cars per lane.

****

LLUH Campus Transformation Project
Existing
Evening Peak Hour

Level Of Service Computation Report
2000 HCM Unsignalized Method (Base Volume Alternative)

****

Intersection #4 Campus Street (NS) at San Juan Street (EW)

****

Average Delay (sec/veh): 0.5 Worst Case Level Of Service: B[11.0]

****

Approach:	North Bound			South Bound			East Bound			West Bound		
Movement:	L -	T -	R	L -	T -	R	L -	T -	R	L -	T -	R
Control:	Uncontrolled			Uncontrolled			Stop Sign			Stop Sign		
Rights:	Include			Include			Include			Include		
Lanes:	0 1	0 0	0	0 0	1 1	0	0 0	1! 0	0	0 0	0 0	0
Volume Module:												
Base Vol:	19	237	0	0	570	5	1	0	13	0	0	0
Growth Adj:	1.00	1.00	1.00	1.00	1.00	1.00	1.00	1.00	1.00	1.00	1.00	1.00
Initial Bse:	19	237	0	0	570	5	1	0	13	0	0	0
User Adj:	1.00	1.00	1.00	1.00	1.00	1.00	1.00	1.00	1.00	1.00	1.00	1.00
PHF Adj:	0.88	0.88	0.88	0.83	0.83	0.83	0.58	0.58	0.58	1.00	1.00	1.00
PHF Volume:	22	269	0	0	689	6	2	0	22	0	0	0
Reduct Vol:	0	0	0	0	0	0	0	0	0	0	0	0
FinalVolume:	22	269	0	0	689	6	2	0	22	0	0	0
Critical Gap Module:												
Critical Gp:	4.1	xxxx	xxxxx	xxxxx	xxxx	xxxxx	6.4	6.5	6.2	xxxxx	xxxx	xxxxx
FollowUpTim:	2.2	xxxx	xxxxx	xxxxx	xxxx	xxxxx	3.5	4.0	3.3	xxxxx	xxxx	xxxxx
Capacity Module:												
Cnflict Vol:	695	xxxx	xxxxx	xxxx	xxxx	xxxxx	1004	1004	347	xxxx	xxxx	xxxxx
Potent Cap.:	910	xxxx	xxxxx	xxxx	xxxx	xxxxx	270	244	700	xxxx	xxxx	xxxxx
Move Cap.:	910	xxxx	xxxxx	xxxx	xxxx	xxxxx	265	238	700	xxxx	xxxx	xxxxx
Volume/Cap:	0.02	xxxx	xxxx	xxxx	xxxx	xxxx	0.01	0.00	0.03	xxxx	xxxx	xxxx
Level Of Service Module:												
2Way95thQ:	0.1	xxxx	xxxxx	xxxx	xxxx	xxxxx	xxxx	xxxx	xxxxx	xxxx	xxxx	xxxxx
Control Del:	9.1	xxxx	xxxxx	xxxxx	xxxx	xxxxx	xxxxx	xxxx	xxxxx	xxxxx	xxxx	xxxxx
LOS by Move:	A	*	*	*	*	*	*	*	*	*	*	*
Movement:	LT -	LTR -	RT	LT -	LTR -	RT	LT -	LTR -	RT	LT -	LTR -	RT
Shared Cap.:	xxxx	xxxx	xxxxx	xxxx	xxxx	xxxxx	xxxx	627	xxxxx	xxxx	xxxx	xxxxx
SharedQueue:	0.1	xxxx	xxxxx	xxxxx	xxxx	xxxxx	xxxxx	0.1	xxxxx	xxxxx	xxxx	xxxxx
Shrd ConDel:	9.1	xxxx	xxxxx	xxxxx	xxxx	xxxxx	xxxxx	11.0	xxxxx	xxxxx	xxxx	xxxxx
Shared LOS:	A	*	*	*	*	*	*	B	*	*	*	*
ApproachDel:	xxxxxx			xxxxxx			11.0			xxxxxx		
ApproachLOS:	*			*			B			*		

****

Note: Queue reported is the number of cars per lane.

****

LLUH Campus Transformation Project
Existing
Morning Peak Hour

Level Of Service Computation Report
2000 HCM Operations Method (Base Volume Alternative)

Intersection #5 Campus Street (NS) at Barton Road (EW)

Cycle (sec): 130 Critical Vol./Cap.(X): 0.916
Loss Time (sec): 8 (Y+R=3.0 sec) Average Delay (sec/veh): 41.7
Optimal Cycle: OPTIMIZED Level Of Service: D

Approach:	North Bound			South Bound			East Bound			West Bound		
Movement:	L - T - R			L - T - R			L - T - R			L - T - R		
Control:	Prot+Permit			Prot+Permit			Protected			Protected		
Rights:	Include			Include			Include			Include		
Min. Green:	28	28	28	28	28	28	10	18	18	10	21	21
Lanes:	1 0	0 1	0	1 0	1 0	1	1 0	2 0	1	1 0	2 0	1
Volume Module:												
Base Vol:	101	125	9	126	19	62	183	1000	22	11	479	428
Growth Adj:	1.00	1.00	1.00	1.00	1.00	1.00	1.00	1.00	1.00	1.00	1.00	1.00
Initial Bse:	101	125	9	126	19	62	183	1000	22	11	479	428
User Adj:	1.00	1.00	1.00	1.00	1.00	1.00	1.00	1.00	1.00	1.00	1.00	1.00
PHF Adj:	0.76	0.76	0.76	0.79	0.79	0.79	0.87	0.87	0.87	0.78	0.78	0.78
PHF Volume:	133	164	12	161	24	79	212	1156	25	14	614	549
Reduct Vol:	0	0	0	0	0	0	0	0	0	0	0	0
Reduced Vol:	133	164	12	161	24	79	212	1156	25	14	614	549
PCE Adj:	1.00	1.00	1.00	1.00	1.00	1.00	1.00	1.00	1.00	1.00	1.00	1.00
MLF Adj:	1.00	1.00	1.00	1.00	1.00	1.00	1.00	1.00	1.00	1.00	1.00	1.00
FinalVolume:	133	164	12	161	24	79	212	1156	25	14	614	549
Saturation Flow Module:												
Sat/Lane:	1800	1800	1800	1800	1800	1800	1800	1800	1800	1800	1800	1800
Adjustment:	0.94	1.00	1.00	0.94	1.00	1.00	0.94	1.00	1.00	0.94	1.00	1.00
Lanes:	1.00	0.93	0.07	1.00	1.00	1.00	1.00	2.00	1.00	1.00	2.00	1.00
Final Sat.:	1700	1679	121	1700	1800	1800	1700	3600	1800	1700	3600	1800
Capacity Analysis Module:												
Vol/Sat:	0.00	0.10	0.10	0.00	0.01	0.04	0.12	0.32	0.01	0.01	0.17	0.30
Crit Moves:		****		****			****					****
Green/Cycle:	0.22	0.22	0.22	0.22	0.22	0.22	0.15	0.41	0.41	0.10	0.36	0.36
Volume/Cap:	0.36	0.45	0.45	0.44	0.06	0.20	0.85	0.78	0.03	0.08	0.47	0.85
Delay/Veh:	44.0	45.2	45.2	45.0	40.6	42.1	76.4	36.2	23.0	53.5	32.3	48.2
User DelAdj:	1.00	1.00	1.00	1.00	1.00	1.00	1.00	1.00	1.00	1.00	1.00	1.00
AdjDel/Veh:	44.0	45.2	45.2	45.0	40.6	42.1	76.4	36.2	23.0	53.5	32.3	48.2
LOS by Move:	D	D	D	D	D	D	E	D	C	D	C	D
HCM2kAvgQ:	5	6	6	6	1	3	11	21	1	1	9	22

Note: Queue reported is the number of cars per lane.

LLUH Campus Transformation Project
Existing
Evening Peak Hour

Level Of Service Computation Report
2000 HCM Operations Method (Base Volume Alternative)

****

Intersection #5 Campus Street (NS) at Barton Road (EW)

****

Cycle (sec): 130 Critical Vol./Cap.(X): 0.908
Loss Time (sec): 8 (Y+R=3.0 sec) Average Delay (sec/veh): 44.0
Optimal Cycle: OPTIMIZED Level Of Service: D

****

Approach:	North Bound			South Bound			East Bound			West Bound		
Movement:	L - T - R			L - T - R			L - T - R			L - T - R		
Control:	Prot+Permit			Prot+Permit			Protected			Protected		
Rights:	Include			Include			Include			Include		
Min. Green:	28	28	28	28	28	28	10	18	18	10	21	21
Lanes:	1 0	0 1	0	1 0	1 0	1	1 0	2 0	1	1 0	2 0	1
Volume Module:												
Base Vol:	59	22	11	355	66	118	55	596	43	23	1064	144
Growth Adj:	1.00	1.00	1.00	1.00	1.00	1.00	1.00	1.00	1.00	1.00	1.00	1.00
Initial Bse:	59	22	11	355	66	118	55	596	43	23	1064	144
User Adj:	1.00	1.00	1.00	1.00	1.00	1.00	1.00	1.00	1.00	1.00	1.00	1.00
PHF Adj:	0.70	0.70	0.70	0.86	0.86	0.86	0.89	0.89	0.89	0.93	0.93	0.93
PHF Volume:	85	32	16	411	76	136	62	669	48	25	1147	155
Reduct Vol:	0	0	0	0	0	0	0	0	0	0	0	0
Reduced Vol:	85	32	16	411	76	136	62	669	48	25	1147	155
PCE Adj:	1.00	1.00	1.00	1.00	1.00	1.00	1.00	1.00	1.00	1.00	1.00	1.00
MLF Adj:	1.00	1.00	1.00	1.00	1.00	1.00	1.00	1.00	1.00	1.00	1.00	1.00
FinalVolume:	85	32	16	411	76	136	62	669	48	25	1147	155
Saturation Flow Module:												
Sat/Lane:	1800	1800	1800	1800	1800	1800	1800	1800	1800	1800	1800	1800
Adjustment:	0.94	1.00	1.00	0.94	1.00	1.00	0.94	1.00	1.00	0.94	1.00	1.00
Lanes:	1.00	0.67	0.33	1.00	1.00	1.00	1.00	2.00	1.00	1.00	2.00	1.00
Final Sat.:	1700	1200	600	1700	1800	1800	1700	3600	1800	1700	3600	1800
Capacity Analysis Module:												
Vol/Sat:	0.00	0.03	0.03	0.00	0.04	0.08	0.04	0.19	0.03	0.01	0.32	0.09
Crit Moves:		****		****			****				****	
Green/Cycle:	0.25	0.22	0.22	0.28	0.25	0.25	0.08	0.31	0.31	0.13	0.37	0.37
Volume/Cap:	0.20	0.12	0.12	0.87	0.17	0.31	0.47	0.59	0.09	0.11	0.87	0.23
Delay/Veh:	39.0	41.2	41.2	60.0	38.7	40.3	60.1	38.4	31.5	50.1	44.5	28.6
User DelAdj:	1.00	1.00	1.00	1.00	1.00	1.00	1.00	1.00	1.00	1.00	1.00	1.00
AdjDel/Veh:	39.0	41.2	41.2	60.0	38.7	40.3	60.1	38.4	31.5	50.1	44.5	28.6
LOS by Move:	D	D	D	E	D	D	E	D	C	D	D	C
HCM2kAvgQ:	3	2	2	19	2	4	3	12	1	1	24	4

****

Note: Queue reported is the number of cars per lane.

****

LLUH Campus Transformation Project
Existing
Morning Peak Hour

Level Of Service Computation Report
2000 HCM Unsignalized Method (Base Volume Alternative)

Intersection #6 Parkland Street (NS) at Stewart Street (EW)

Average Delay (sec/veh): 1.0 Worst Case Level Of Service: B[10.5]

Approach:	North Bound			South Bound			East Bound			West Bound		
Movement:	L -	T -	R	L -	T -	R	L -	T -	R	L -	T -	R
Control:	Stop Sign			Stop Sign			Uncontrolled			Uncontrolled		
Rights:	Include			Include			Include			Include		
Lanes:	0 0	0 0	0	0 0	1! 0	0	0 1	0 0	0	0 0	0 1	0
Volume Module:												
Base Vol:	0	0	0	5	0	15	32	230	0	0	195	10
Growth Adj:	1.00	1.00	1.00	1.00	1.00	1.00	1.00	1.00	1.00	1.00	1.00	1.00
Initial Bse:	0	0	0	5	0	15	32	230	0	0	195	10
User Adj:	1.00	1.00	1.00	1.00	1.00	1.00	1.00	1.00	1.00	1.00	1.00	1.00
PHF Adj:	1.00	1.00	1.00	0.79	0.79	0.79	0.80	0.80	0.80	0.85	0.85	0.85
PHF Volume:	0	0	0	6	0	19	40	288	0	0	230	12
Reduct Vol:	0	0	0	0	0	0	0	0	0	0	0	0
FinalVolume:	0	0	0	6	0	19	40	288	0	0	230	12
Critical Gap Module:												
Critical Gp:	xxxxx	xxxx	xxxxx	6.4	6.5	6.2	4.1	xxxx	xxxxx	xxxxx	xxxx	xxxxx
FollowUpTim:	xxxxx	xxxx	xxxxx	3.5	4.0	3.3	2.2	xxxx	xxxxx	xxxxx	xxxx	xxxxx
Capacity Module:												
Cnflict Vol:	xxxx	xxxx	xxxxx	604	604	236	242	xxxx	xxxxx	xxxx	xxxx	xxxxx
Potent Cap.:	xxxx	xxxx	xxxxx	465	415	808	1336	xxxx	xxxxx	xxxx	xxxx	xxxxx
Move Cap.:	xxxx	xxxx	xxxxx	454	402	808	1336	xxxx	xxxxx	xxxx	xxxx	xxxxx
Volume/Cap:	xxxx	xxxx	xxxx	0.01	0.00	0.02	0.03	xxxx	xxxx	xxxx	xxxx	xxxx
Level Of Service Module:												
2Way95thQ:	xxxx	xxxx	xxxxx	xxxx	xxxx	xxxxx	0.1	xxxx	xxxxx	xxxx	xxxx	xxxxx
Control Del:	xxxxx	xxxx	xxxxx	xxxxx	xxxx	xxxxx	7.8	xxxx	xxxxx	xxxxx	xxxx	xxxxx
LOS by Move:	*	*	*	*	*	*	A	*	*	*	*	*
Movement:	LT -	LTR -	RT	LT -	LTR -	RT	LT -	LTR -	RT	LT -	LTR -	RT
Shared Cap.:	xxxx	xxxx	xxxxx	xxxx	676	xxxxx	xxxx	xxxx	xxxxx	xxxx	xxxx	xxxxx
SharedQueue:	xxxxx	xxxx	xxxxx	xxxxx	0.1	xxxxx	0.1	xxxx	xxxxx	xxxxx	xxxx	xxxxx
Shrd ConDel:	xxxxx	xxxx	xxxxx	xxxxx	10.5	xxxxx	7.8	xxxx	xxxxx	xxxxx	xxxx	xxxxx
Shared LOS:	*	*	*	*	B	*	A	*	*	*	*	*
ApproachDel:	xxxxxx			10.5			xxxxxx			xxxxxx		
ApproachLOS:	*			B			*			*		

Note: Queue reported is the number of cars per lane.

LLUH Campus Transformation Project
Existing
Evening Peak Hour

Level Of Service Computation Report
2000 HCM Unsignalized Method (Base Volume Alternative)

Intersection #6 Parkland Street (NS) at Stewart Street (EW)

Average Delay (sec/veh): 0.7 Worst Case Level Of Service: B[12.0]

Approach:	North Bound					South Bound					East Bound					West Bound				
Movement:	L	-	T	-	R	L	-	T	-	R	L	-	T	-	R	L	-	T	-	R
Control:	Stop Sign					Stop Sign					Uncontrolled					Uncontrolled				
Rights:	Include					Include					Include					Include				
Lanes:	0	0	0	0	0	0	0	1!	0	0	0	1	0	0	0	0	0	0	1	0
Volume Module:																				
Base Vol:	0	0	0			12	0			16	12	245		0		0	266			9
Growth Adj:	1.00	1.00	1.00			1.00	1.00			1.00	1.00	1.00		1.00		1.00	1.00			1.00
Initial Bse:	0	0	0			12	0			16	12	245		0		0	266			9
User Adj:	1.00	1.00	1.00			1.00	1.00			1.00	1.00	1.00		1.00		1.00	1.00			1.00
PHF Adj:	1.00	1.00	1.00			0.84	0.84			0.84	0.81	0.81		0.81		0.81	0.81			0.81
PHF Volume:	0	0	0			14	0			19	15	301		0		0	330			11
Reduct Vol:	0	0	0			0	0			0	0	0		0		0	0			0
FinalVolume:	0	0	0			14	0			19	15	301		0		0	330			11
Critical Gap Module:																				
Critical Gp:	xxxxx	xxxx	xxxxx			6.4	6.5			6.2	4.1	xxxx		xxxxx		xxxxx	xxxx			xxxxx
FollowUpTim:	xxxxx	xxxx	xxxxx			3.5	4.0			3.3	2.2	xxxx		xxxxx		xxxxx	xxxx			xxxxx
Capacity Module:																				
Cnflict Vol:	xxxx	xxxx	xxxxx			666	666			336	341	xxxx		xxxxx		xxxx	xxxx			xxxxx
Potent Cap.:	xxxx	xxxx	xxxxx			428	383			711	1229	xxxx		xxxxx		xxxx	xxxx			xxxxx
Move Cap.:	xxxx	xxxx	xxxxx			424	378			711	1229	xxxx		xxxxx		xxxx	xxxx			xxxxx
Volume/Cap:	xxxx	xxxx	xxxx			0.03	0.00			0.03	0.01	xxxx		xxxx		xxxx	xxxx			xxxx
Level Of Service Module:																				
2Way95thQ:	xxxx	xxxx	xxxxx			xxxx	xxxx			xxxxx	0.0	xxxx		xxxxx		xxxx	xxxx			xxxxx
Control Del:	xxxxx	xxxx	xxxxx			xxxxx	xxxx			xxxxx	8.0	xxxx		xxxxx		xxxxx	xxxx			xxxxx
LOS by Move:	*	*	*			*	*			*	A	*		*		*	*			*
Movement:	LT	-	LTR	-	RT	LT	-	LTR	-	RT	LT	-	LTR	-	RT	LT	-	LTR	-	RT
Shared Cap.:	xxxx	xxxx	xxxxx			xxxx	551			xxxxx	xxxx	xxxx		xxxxx		xxxx	xxxx			xxxxx
SharedQueue:	xxxxx	xxxx	xxxxx			xxxxx	0.2			xxxxx	0.0	xxxx		xxxxx		xxxxx	xxxx			xxxxx
Shrd ConDel:	xxxxx	xxxx	xxxxx			xxxxx	12.0			xxxxx	8.0	xxxx		xxxxx		xxxxx	xxxx			xxxxx
Shared LOS:	*	*	*			*	B			*	A	*		*		*	*			*
ApproachDel:	xxxxxx					12.0					xxxxxx					xxxxxx				
ApproachLOS:	*					B					*					*				

Note: Queue reported is the number of cars per lane.

LLUH Campus Transformation Project
Existing
Morning Peak Hour

Level Of Service Computation Report
2000 HCM Operations Method (Base Volume Alternative)

Intersection #7 Anderson Street (NS) at Stewart Street (EW)

Cycle (sec): 85 Critical Vol./Cap.(X): 0.553
Loss Time (sec): 6 (Y+R=3.0 sec) Average Delay (sec/veh): 20.4
Optimal Cycle: OPTIMIZED Level Of Service: C

Approach:	North Bound			South Bound			East Bound			West Bound		
Movement:	L -	T -	R	L -	T -	R	L -	T -	R	L -	T -	R
Control:	Protected			Protected			Permitted			Permitted		
Rights:	Include			Include			Include			Include		
Min. Green:	10	18	18	10	18	18	28	28	28	28	28	28
Lanes:	1 0	2 0	1	1 0	2 0	1	1 0	0 1	0	1 0	0 1	0
Volume Module:												
Base Vol:	47	277	30	234	625	526	196	66	39	22	67	146
Growth Adj:	1.00	1.00	1.00	1.00	1.00	1.00	1.00	1.00	1.00	1.00	1.00	1.00
Initial Bse:	47	277	30	234	625	526	196	66	39	22	67	146
User Adj:	1.00	1.00	1.00	1.00	1.00	1.00	1.00	1.00	1.00	1.00	1.00	1.00
PHF Adj:	0.77	0.77	0.77	0.86	0.86	0.86	0.93	0.93	0.93	0.85	0.85	0.85
PHF Volume:	61	361	39	272	727	612	211	71	42	26	78	171
Reduct Vol:	0	0	0	0	0	0	0	0	0	0	0	0
Reduced Vol:	61	361	39	272	727	612	211	71	42	26	78	171
PCE Adj:	1.00	1.00	1.00	1.00	1.00	1.00	1.00	1.00	1.00	1.00	1.00	1.00
MLF Adj:	1.00	1.00	1.00	1.00	1.00	1.00	1.00	1.00	1.00	1.00	1.00	1.00
FinalVolume:	61	361	39	272	727	612	211	71	42	26	78	171
Saturation Flow Module:												
Sat/Lane:	1800	1800	1800	1800	1800	1800	1800	1800	1800	1800	1800	1800
Adjustment:	0.94	1.00	1.00	0.94	1.00	1.00	0.94	1.00	1.00	0.94	1.00	1.00
Lanes:	1.00	2.00	1.00	1.00	2.00	1.00	1.00	0.63	0.37	1.00	0.31	0.69
Final Sat.:	1700	3600	1800	1700	3600	1800	1700	1131	669	1700	566	1234
Capacity Analysis Module:												
Vol/Sat:	0.04	0.10	0.02	0.16	0.20	0.34	0.12	0.06	0.06	0.02	0.14	0.14
Crit Moves:	****					****					****	
Green/Cycle:	0.12	0.34	0.34	0.26	0.48	0.48	0.33	0.33	0.33	0.33	0.33	0.33
Volume/Cap:	0.31	0.29	0.06	0.62	0.42	0.70	0.38	0.19	0.19	0.05	0.42	0.42
Delay/Veh:	35.2	20.6	18.9	30.5	14.4	19.9	22.3	20.6	20.6	19.4	22.7	22.7
User DelAdj:	1.00	1.00	1.00	1.00	1.00	1.00	1.00	1.00	1.00	1.00	1.00	1.00
AdjDel/Veh:	35.2	20.6	18.9	30.5	14.4	19.9	22.3	20.6	20.6	19.4	22.7	22.7
LOS by Move:	D	C	B	C	B	B	C	C	C	B	C	C
HCM2kAvgQ:	2	4	1	8	6	14	5	2	2	0	5	5

Note: Queue reported is the number of cars per lane.

LLUH Campus Transformation Project
Existing
Evening Peak Hour

Level Of Service Computation Report
2000 HCM Operations Method (Base Volume Alternative)

****

Intersection #7 Anderson Street (NS) at Stewart Street (EW)

****

Cycle (sec): 60 Critical Vol./Cap.(X): 0.512
Loss Time (sec): 6 (Y+R=3.0 sec) Average Delay (sec/veh): 16.4
Optimal Cycle: OPTIMIZED Level Of Service: B

****

Approach:	North Bound			South Bound			East Bound			West Bound		
Movement:	L -	T -	R	L -	T -	R	L -	T -	R	L -	T -	R
Control:	Protected			Protected			Permitted			Permitted		
Rights:	Include			Include			Include			Include		
Min. Green:	10	18	18	10	18	18	28	28	28	28	28	28
Lanes:	1 0 2	0 1		1 0 2	0 1		1 0 0	1 0		1 0 0	1 0	
Volume Module:												
Base Vol:	32	522	15	142	376	233	203	119	58	20	82	291
Growth Adj:	1.00	1.00	1.00	1.00	1.00	1.00	1.00	1.00	1.00	1.00	1.00	1.00
Initial Bse:	32	522	15	142	376	233	203	119	58	20	82	291
User Adj:	1.00	1.00	1.00	1.00	1.00	1.00	1.00	1.00	1.00	1.00	1.00	1.00
PHF Adj:	0.96	0.96	0.96	0.97	0.97	0.97	0.90	0.90	0.90	0.92	0.92	0.92
PHF Volume:	33	545	16	147	389	241	226	132	64	22	89	316
Reduct Vol:	0	0	0	0	0	0	0	0	0	0	0	0
Reduced Vol:	33	545	16	147	389	241	226	132	64	22	89	316
PCE Adj:	1.00	1.00	1.00	1.00	1.00	1.00	1.00	1.00	1.00	1.00	1.00	1.00
MLF Adj:	1.00	1.00	1.00	1.00	1.00	1.00	1.00	1.00	1.00	1.00	1.00	1.00
FinalVolume:	33	545	16	147	389	241	226	132	64	22	89	316
Saturation Flow Module:												
Sat/Lane:	1800	1800	1800	1800	1800	1800	1800	1800	1800	1800	1800	1800
Adjustment:	0.94	1.00	1.00	0.94	1.00	1.00	0.94	1.00	1.00	0.94	1.00	1.00
Lanes:	1.00	2.00	1.00	1.00	2.00	1.00	1.00	0.67	0.33	1.00	0.22	0.78
Final Sat.:	1700	3600	1800	1700	3600	1800	1700	1210	590	1700	396	1404
Capacity Analysis Module:												
Vol/Sat:	0.02	0.15	0.01	0.09	0.11	0.13	0.13	0.11	0.11	0.01	0.22	0.22
Crit Moves:		****		****							****	
Green/Cycle:	0.16	0.29	0.29	0.16	0.29	0.29	0.45	0.45	0.45	0.45	0.45	0.45
Volume/Cap:	0.12	0.52	0.03	0.54	0.37	0.46	0.29	0.24	0.24	0.03	0.50	0.50
Delay/Veh:	22.4	18.9	15.8	25.9	17.7	18.7	11.0	10.6	10.6	9.5	12.5	12.5
User DelAdj:	1.00	1.00	1.00	1.00	1.00	1.00	1.00	1.00	1.00	1.00	1.00	1.00
AdjDel/Veh:	22.4	18.9	15.8	25.9	17.7	18.7	11.0	10.6	10.6	9.5	12.5	12.5
LOS by Move:	C	B	B	C	B	B	B	B	B	A	B	B
HCM2kAvgQ:	1	5	0	4	3	4	3	2	2	0	6	6

****

Note: Queue reported is the number of cars per lane.

****

LLUH Campus Transformation Project
Existing
Morning Peak Hour

Level Of Service Computation Report
2000 HCM Operations Method (Base Volume Alternative)

Intersection #8 Anderson Street (NS) at University Avenue (EW)

Cycle (sec): 130 Critical Vol./Cap.(X): 0.261
Loss Time (sec): 4 (Y+R=3.0 sec) Average Delay (sec/veh): 6.5
Optimal Cycle: OPTIMIZED Level Of Service: A

Approach:	North Bound			South Bound			East Bound			West Bound		
Movement:	L -	T -	R	L -	T -	R	L -	T -	R	L -	T -	R
Control:	Permitted			Permitted			Permitted			Permitted		
Rights:	Include			Include			Include			Include		
Min. Green:	18	18	18	18	18	18	28	28	28	0	0	0
Lanes:	1 0	2 0	0	0 0	2 0	1	1 0	0 0	1	0 0	0 0	0
Volume Module:												
Base Vol:	64	321	0	0	576	122	32	0	23	0	0	0
Growth Adj:	1.00	1.00	1.00	1.00	1.00	1.00	1.00	1.00	1.00	1.00	1.00	1.00
Initial Bse:	64	321	0	0	576	122	32	0	23	0	0	0
User Adj:	1.00	1.00	1.00	1.00	1.00	1.00	1.00	1.00	1.00	1.00	1.00	1.00
PHF Adj:	0.81	0.81	0.81	0.70	0.70	0.70	0.79	0.79	0.79	1.00	1.00	1.00
PHF Volume:	80	399	0	0	825	175	40	0	29	0	0	0
Reduct Vol:	0	0	0	0	0	0	0	0	0	0	0	0
Reduced Vol:	80	399	0	0	825	175	40	0	29	0	0	0
PCE Adj:	1.00	1.00	1.00	1.00	1.00	1.00	1.00	1.00	1.00	1.00	1.00	1.00
MLF Adj:	1.00	1.00	1.00	1.00	1.00	1.00	1.00	1.00	1.00	1.00	1.00	1.00
FinalVolume:	80	399	0	0	825	175	40	0	29	0	0	0
Saturation Flow Module:												
Sat/Lane:	1800	1800	1800	1800	1800	1800	1800	1800	1800	1800	1800	1800
Adjustment:	0.94	1.00	1.00	0.94	1.00	1.00	0.94	1.00	1.00	0.94	1.00	1.00
Lanes:	1.00	2.00	0.00	0.00	2.00	1.00	1.00	0.00	1.00	0.00	0.00	0.00
Final Sat.:	1700	3600	0	0	3600	1800	1700	0	1800	0	0	0
Capacity Analysis Module:												
Vol/Sat:	0.05	0.11	0.00	0.00	0.23	0.10	0.02	0.00	0.02	0.00	0.00	0.00
Crit Moves:					****		****					
Green/Cycle:	0.75	0.75	0.00	0.00	0.75	0.75	0.22	0.00	0.22	0.00	0.00	0.00
Volume/Cap:	0.06	0.15	0.00	0.00	0.30	0.13	0.11	0.00	0.07	0.00	0.00	0.00
Delay/Veh:	4.2	4.5	0.0	0.0	5.2	4.4	41.1	0.0	40.8	0.0	0.0	0.0
User DelAdj:	1.00	1.00	1.00	1.00	1.00	1.00	1.00	1.00	1.00	1.00	1.00	1.00
AdjDel/Veh:	4.2	4.5	0.0	0.0	5.2	4.4	41.1	0.0	40.8	0.0	0.0	0.0
LOS by Move:	A	A	A	A	A	A	D	A	D	A	A	A
HCM2kAvgQ:	1	2	0	0	5	2	1	0	1	0	0	0

Note: Queue reported is the number of cars per lane.

LLUH Campus Transformation Project
Existing
Evening Peak Hour

Level Of Service Computation Report
2000 HCM Operations Method (Base Volume Alternative)

****

Intersection #8 Anderson Street (NS) at University Avenue (EW)

****

Cycle (sec): 115 Critical Vol./Cap.(X): 0.227
Loss Time (sec): 4 (Y+R=3.0 sec) Average Delay (sec/veh): 7.7
Optimal Cycle: OPTIMIZED Level Of Service: A

****

Approach:	North Bound			South Bound			East Bound			West Bound		
Movement:	L -	T -	R	L -	T -	R	L -	T -	R	L -	T -	R
Control:	Permitted			Permitted			Permitted			Permitted		
Rights:	Include			Include			Include			Include		
Min. Green:	18	18	18	18	18	18	28	28	28	0	0	0
Lanes:	1 0	2 0	0	0 0	2 0	1	1 0	0 0	1	0 0	0 0	0
Volume Module:												
Base Vol:	58	555	0	0	405	53	56	0	30	0	0	0
Growth Adj:	1.00	1.00	1.00	1.00	1.00	1.00	1.00	1.00	1.00	1.00	1.00	1.00
Initial Bse:	58	555	0	0	405	53	56	0	30	0	0	0
User Adj:	1.00	1.00	1.00	1.00	1.00	1.00	1.00	1.00	1.00	1.00	1.00	1.00
PHF Adj:	0.88	0.88	0.88	0.84	0.84	0.84	0.74	0.74	0.74	1.00	1.00	1.00
PHF Volume:	66	630	0	0	481	63	76	0	40	0	0	0
Reduct Vol:	0	0	0	0	0	0	0	0	0	0	0	0
Reduced Vol:	66	630	0	0	481	63	76	0	40	0	0	0
PCE Adj:	1.00	1.00	1.00	1.00	1.00	1.00	1.00	1.00	1.00	1.00	1.00	1.00
MLF Adj:	1.00	1.00	1.00	1.00	1.00	1.00	1.00	1.00	1.00	1.00	1.00	1.00
FinalVolume:	66	630	0	0	481	63	76	0	40	0	0	0
Saturation Flow Module:												
Sat/Lane:	1800	1800	1800	1800	1800	1800	1800	1800	1800	1800	1800	1800
Adjustment:	0.94	1.00	1.00	0.94	1.00	1.00	0.94	1.00	1.00	0.94	1.00	1.00
Lanes:	1.00	2.00	0.00	0.00	2.00	1.00	1.00	0.00	1.00	0.00	0.00	0.00
Final Sat.:	1700	3600	0	0	3600	1800	1700	0	1800	0	0	0
Capacity Analysis Module:												
Vol/Sat:	0.04	0.18	0.00	0.00	0.13	0.03	0.04	0.00	0.02	0.00	0.00	0.00
Crit Moves:		****					****					
Green/Cycle:	0.72	0.72	0.00	0.00	0.72	0.72	0.24	0.00	0.24	0.00	0.00	0.00
Volume/Cap:	0.05	0.24	0.00	0.00	0.19	0.05	0.18	0.00	0.09	0.00	0.00	0.00
Delay/Veh:	4.6	5.4	0.0	0.0	5.2	4.6	34.7	0.0	33.8	0.0	0.0	0.0
User DelAdj:	1.00	1.00	1.00	1.00	1.00	1.00	1.00	1.00	1.00	1.00	1.00	1.00
AdjDel/Veh:	4.6	5.4	0.0	0.0	5.2	4.6	34.7	0.0	33.8	0.0	0.0	0.0
LOS by Move:	A	A	A	A	A	A	C	A	C	A	A	A
HCM2kAvgQ:	1	4	0	0	3	1	2	0	1	0	0	0

****

Note: Queue reported is the number of cars per lane.

****

LLUH Campus Transformation Project
Existing
Morning Peak Hour

Level Of Service Computation Report
2000 HCM 4-Way Stop Method (Base Volume Alternative)

Intersection #9 Anderson Street (NS) at Mound Street (EW)

Cycle (sec):	0	Critical Vol./Cap.(X):	0.664
Loss Time (sec):	0 (Y+R=4.0 sec)	Average Delay (sec/veh):	17.6
Optimal Cycle:	0	Level Of Service:	C

Approach:	North Bound			South Bound			East Bound			West Bound		
Movement:	L - T - R			L - T - R			L - T - R			L - T - R		
Control:	Stop Sign			Stop Sign			Stop Sign			Stop Sign		
Rights:	Include			Include			Include			Include		
Min. Green:	0	0	0	0	0	0	0	0	0	0	0	0
Lanes:	1 1 0 0 1			0 0 1! 0 0			1 0 0 1 1			0 0 1! 0 0		
Volume Module:												
Base Vol:	364	72	63	16	16	10	27	95	446	27	19	9
Growth Adj:	1.00	1.00	1.00	1.00	1.00	1.00	1.00	1.00	1.00	1.00	1.00	1.00
Initial Bse:	364	72	63	16	16	10	27	95	446	27	19	9
User Adj:	1.00	1.00	1.00	1.00	1.00	1.00	1.00	1.00	1.00	1.00	1.00	1.00
PHF Adj:	0.77	0.77	0.77	0.75	0.75	0.75	0.71	0.71	0.71	0.56	0.56	0.56
PHF Volume:	473	94	82	21	21	13	38	134	629	48	34	16
Reduct Vol:	0	0	0	0	0	0	0	0	0	0	0	0
Reduced Vol:	473	94	82	21	21	13	38	134	629	48	34	16
PCE Adj:	1.00	1.00	1.00	1.00	1.00	1.00	1.00	1.00	1.00	1.00	1.00	1.00
MLF Adj:	1.00	1.00	1.00	1.00	1.00	1.00	1.00	1.00	1.00	1.00	1.00	1.00
FinalVolume:	473	94	82	21	21	13	38	134	629	48	34	16
Saturation Flow Module:												
Adjustment:	1.00	1.00	1.00	1.00	1.00	1.00	1.00	1.00	1.00	1.00	1.00	1.00
Lanes:	1.67	0.33	1.00	0.38	0.38	0.24	1.00	0.35	1.65	0.49	0.35	0.16
Final Sat.:	822	165	578	178	178	111	496	202	971	236	166	79
Capacity Analysis Module:												
Vol/Sat:	0.58	0.57	0.14	0.12	0.12	0.12	0.08	0.66	0.65	0.20	0.20	0.20
Crit Moves:	****				****			****			****	
Delay/Veh:	18.9	18.5	9.7	11.3	11.3	11.3	10.4	19.9	18.9	12.0	12.0	12.0
Delay Adj:	1.00	1.00	1.00	1.00	1.00	1.00	1.00	1.00	1.00	1.00	1.00	1.00
AdjDel/Veh:	18.9	18.5	9.7	11.3	11.3	11.3	10.4	19.9	18.9	12.0	12.0	12.0
LOS by Move:	C	C	A	B	B	B	B	C	C	B	B	B
ApproachDel:		17.7			11.3			18.7			12.0	
Delay Adj:		1.00			1.00			1.00			1.00	
ApprAdjDel:		17.7			11.3			18.7			12.0	
LOS by Appr:		C			B			C			B	
AllWayAvgQ:	1.2	1.2	0.2	0.1	0.1	0.1	0.1	1.8	1.8	0.2	0.2	0.2

Note: Queue reported is the number of cars per lane.

LLUH Campus Transformation Project
Existing
Evening Peak Hour

Level Of Service Computation Report
2000 HCM 4-Way Stop Method (Base Volume Alternative)

****

Intersection #9 Anderson Street (NS) at Mound Street (EW)

****

Cycle (sec):	0	Critical Vol./Cap.(X):	0.628
Loss Time (sec):	0 (Y+R=4.0 sec)	Average Delay (sec/veh):	16.4
Optimal Cycle:	0	Level Of Service:	C

****

Approach:	North Bound			South Bound			East Bound			West Bound		
Movement:	L -	T -	R	L -	T -	R	L -	T -	R	L -	T -	R
Control:	Stop Sign			Stop Sign			Stop Sign			Stop Sign		
Rights:	Include			Include			Include			Include		
Min. Green:	0	0	0	0	0	0	0	0	0	0	0	0
Lanes:	1 1	0 0	1	0 0	1! 0	0	1 0	0 1	1	0 0	1! 0	0
Volume Module:												
Base Vol:	529	32	45	8	57	8	10	54	380	45	74	3
Growth Adj:	1.00	1.00	1.00	1.00	1.00	1.00	1.00	1.00	1.00	1.00	1.00	1.00
Initial Bse:	529	32	45	8	57	8	10	54	380	45	74	3
User Adj:	1.00	1.00	1.00	1.00	1.00	1.00	1.00	1.00	1.00	1.00	1.00	1.00
PHF Adj:	0.88	0.88	0.88	0.76	0.76	0.76	0.83	0.83	0.83	0.83	0.83	0.83
PHF Volume:	601	36	51	11	75	11	12	65	455	54	89	4
Reduct Vol:	0	0	0	0	0	0	0	0	0	0	0	0
Reduced Vol:	601	36	51	11	75	11	12	65	455	54	89	4
PCE Adj:	1.00	1.00	1.00	1.00	1.00	1.00	1.00	1.00	1.00	1.00	1.00	1.00
MLF Adj:	1.00	1.00	1.00	1.00	1.00	1.00	1.00	1.00	1.00	1.00	1.00	1.00
FinalVolume:	601	36	51	11	75	11	12	65	455	54	89	4
Saturation Flow Module:												
Adjustment:	1.00	1.00	1.00	1.00	1.00	1.00	1.00	1.00	1.00	1.00	1.00	1.00
Lanes:	1.89	0.11	1.00	0.11	0.78	0.11	1.00	0.25	1.75	0.37	0.61	0.02
Final Sat.:	957	58	603	51	365	51	473	137	979	175	287	12
Capacity Analysis Module:												
Vol/Sat:	0.63	0.62	0.08	0.21	0.21	0.21	0.03	0.47	0.47	0.31	0.31	0.31
Crit Moves:	****				****			****		****		
Delay/Veh:	20.4	20.2	9.1	12.0	12.0	12.0	10.3	14.4	14.1	13.3	13.3	13.3
Delay Adj:	1.00	1.00	1.00	1.00	1.00	1.00	1.00	1.00	1.00	1.00	1.00	1.00
AdjDel/Veh:	20.4	20.2	9.1	12.0	12.0	12.0	10.3	14.4	14.1	13.3	13.3	13.3
LOS by Move:	C	C	A	B	B	B	B	B	B	B	B	B
ApproachDel:		19.6			12.0			14.0			13.3	
Delay Adj:		1.00			1.00			1.00			1.00	
ApprAdjDel:		19.6			12.0			14.0			13.3	
LOS by Appr:		C			B			B			B	
AllWayAvgQ:	1.5	1.5	0.1	0.2	0.2	0.2	0.0	0.8	0.8	0.4	0.4	0.4

****

Note: Queue reported is the number of cars per lane.

****

LLUH Campus Transformation Project
Existing
Morning Peak Hour

Level Of Service Computation Report
2000 HCM Unsignalized Method (Base Volume Alternative)

Intersection #10 Anderson Street (NS) at Taylor Street (EW)

Average Delay (sec/veh): 0.8 Worst Case Level Of Service: A[9.1]

Approach:	North Bound			South Bound			East Bound			West Bound		
Movement:	L - T - R			L - T - R			L - T - R			L - T - R		
Control:	Uncontrolled			Uncontrolled			Stop Sign			Stop Sign		
Rights:	Include			Include			Include			Include		
Lanes:	1 0 2 0 0			0 0 1 1 0			0 0 0 0 0			0 0 0 0 0		
Volume Module:												
Base Vol:	91	474	0	0	473	41	0	0	0	0	0	0
Growth Adj:	1.00	1.00	1.00	1.00	1.00	1.00	1.00	1.00	1.00	1.00	1.00	1.00
Initial Bse:	91	474	0	0	473	41	0	0	0	0	0	0
User Adj:	1.00	1.00	1.00	1.00	1.00	1.00	1.00	1.00	1.00	1.00	1.00	1.00
PHF Adj:	0.77	0.77	0.77	0.87	0.87	0.87	1.00	1.00	1.00	1.00	1.00	1.00
PHF Volume:	118	617	0	0	544	47	0	0	0	0	0	0
Reduct Vol:	0	0	0	0	0	0	0	0	0	0	0	0
FinalVolume:	118	617	0	0	544	47	0	0	0	0	0	0
Critical Gap Module:												
Critical Gp:	4.1	xxxx	xxxxx	xxxxx	xxxx	xxxxx	xxxxx	xxxx	xxxxx	xxxxx	xxxx	xxxxx
FollowUpTim:	2.2	xxxx	xxxxx	xxxxx	xxxx	xxxxx	xxxxx	xxxx	xxxxx	xxxxx	xxxx	xxxxx
Capacity Module:												
Cnflict Vol:	591	xxxx	xxxxx	xxxx	xxxx	xxxxx	xxxx	xxxx	xxxxx	xxxx	xxxx	xxxxx
Potent Cap.:	994	xxxx	xxxxx	xxxx	xxxx	xxxxx	xxxx	xxxx	xxxxx	xxxx	xxxx	xxxxx
Move Cap.:	994	xxxx	xxxxx	xxxx	xxxx	xxxxx	xxxx	xxxx	xxxxx	xxxx	xxxx	xxxxx
Volume/Cap:	0.12	xxxx	xxxx	xxxx	xxxx	xxxx	xxxx	xxxx	xxxx	xxxx	xxxx	xxxx
Level Of Service Module:												
2Way95thQ:	0.4	xxxx	xxxxx	xxxx	xxxx	xxxxx	xxxx	xxxx	xxxxx	xxxx	xxxx	xxxxx
Control Del:	9.1	xxxx	xxxxx	xxxxx	xxxx	xxxxx	xxxxx	xxxx	xxxxx	xxxxx	xxxx	xxxxx
LOS by Move:	A	*	*	*	*	*	*	*	*	*	*	*
Movement:	LT - LTR - RT			LT - LTR - RT			LT - LTR - RT			LT - LTR - RT		
Shared Cap.:	xxxx	xxxx	xxxxx	xxxx	xxxx	xxxxx	xxxx	xxxx	xxxxx	xxxx	xxxx	xxxxx
SharedQueue:	xxxxx	xxxx	xxxxx	xxxxx	xxxx	xxxxx	xxxxx	xxxx	xxxxx	xxxxx	xxxx	xxxxx
Shrd ConDel:	xxxxx	xxxx	xxxxx	xxxxx	xxxx	xxxxx	xxxxx	xxxx	xxxxx	xxxxx	xxxx	xxxxx
Shared LOS:	*	*	*	*	*	*	*	*	*	*	*	*
ApproachDel:	xxxxxx			xxxxxx			xxxxxx			xxxxxx		
ApproachLOS:	*			*			*			*		

Note: Queue reported is the number of cars per lane.

LLUH Campus Transformation Project
Existing
Evening Peak Hour

Level Of Service Computation Report
2000 HCM Unsignalized Method (Base Volume Alternative)

Intersection #10 Anderson Street (NS) at Taylor Street (EW)

Average Delay (sec/veh): 0.1 Worst Case Level Of Service: A[8.5]

Approach:	North Bound			South Bound			East Bound			West Bound		
Movement:	L -	T -	R	L -	T -	R	L -	T -	R	L -	T -	R
Control:	Uncontrolled			Uncontrolled			Stop Sign			Stop Sign		
Rights:	Include			Include			Include			Include		
Lanes:	1 0 2 0 0			0 0 1 1 0			0 0 0 0 0			0 0 0 0 0		
Volume Module:												
Base Vol:	15	595	0	0	474	5	0	0	0	0	0	0
Growth Adj:	1.00	1.00	1.00	1.00	1.00	1.00	1.00	1.00	1.00	1.00	1.00	1.00
Initial Bse:	15	595	0	0	474	5	0	0	0	0	0	0
User Adj:	1.00	1.00	1.00	1.00	1.00	1.00	1.00	1.00	1.00	1.00	1.00	1.00
PHF Adj:	0.91	0.91	0.91	0.91	0.91	0.91	1.00	1.00	1.00	1.00	1.00	1.00
PHF Volume:	16	654	0	0	521	5	0	0	0	0	0	0
Reduct Vol:	0	0	0	0	0	0	0	0	0	0	0	0
FinalVolume:	16	654	0	0	521	5	0	0	0	0	0	0
Critical Gap Module:												
Critical Gp:	4.1	xxxx	xxxxx	xxxxx	xxxx	xxxxx	xxxxx	xxxx	xxxxx	xxxxx	xxxx	xxxxx
FollowUpTim:	2.2	xxxx	xxxxx	xxxxx	xxxx	xxxxx	xxxxx	xxxx	xxxxx	xxxxx	xxxx	xxxxx
Capacity Module:												
Cnflict Vol:	527	xxxx	xxxxx	xxxx	xxxx	xxxxx	xxxx	xxxx	xxxxx	xxxx	xxxx	xxxxx
Potent Cap.:	1051	xxxx	xxxxx	xxxx	xxxx	xxxxx	xxxx	xxxx	xxxxx	xxxx	xxxx	xxxxx
Move Cap.:	1051	xxxx	xxxxx	xxxx	xxxx	xxxxx	xxxx	xxxx	xxxxx	xxxx	xxxx	xxxxx
Volume/Cap:	0.02	xxxx	xxxx	xxxx	xxxx	xxxx	xxxx	xxxx	xxxx	xxxx	xxxx	xxxx
Level Of Service Module:												
2Way95thQ:	0.0	xxxx	xxxxx	xxxx	xxxx	xxxxx	xxxx	xxxx	xxxxx	xxxx	xxxx	xxxxx
Control Del:	8.5	xxxx	xxxxx	xxxxx	xxxx	xxxxx	xxxxx	xxxx	xxxxx	xxxxx	xxxx	xxxxx
LOS by Move:	A	*	*	*	*	*	*	*	*	*	*	*
Movement:	LT -	LTR -	RT	LT -	LTR -	RT	LT -	LTR -	RT	LT -	LTR -	RT
Shared Cap.:	xxxx	xxxx	xxxxx	xxxx	xxxx	xxxxx	xxxx	xxxx	xxxxx	xxxx	xxxx	xxxxx
SharedQueue:	xxxxx	xxxx	xxxxx	xxxxx	xxxx	xxxxx	xxxxx	xxxx	xxxxx	xxxxx	xxxx	xxxxx
Shrd ConDel:	xxxxx	xxxx	xxxxx	xxxxx	xxxx	xxxxx	xxxxx	xxxx	xxxxx	xxxxx	xxxx	xxxxx
Shared LOS:	*	*	*	*	*	*	*	*	*	*	*	*
ApproachDel:	xxxxxx			xxxxxx			xxxxxx			xxxxxx		
ApproachLOS:	*			*			*			*		

Note: Queue reported is the number of cars per lane.

LLUH Campus Transformation Project
Existing
Morning Peak Hour

Level Of Service Computation Report
2000 HCM 4-Way Stop Method (Base Volume Alternative)

Intersection #11 Anderson Street (NS) at Prospect Avenue (EW)

Cycle (sec):	0	Critical Vol./Cap.(X):	0.631
Loss Time (sec):	0 (Y+R=4.0 sec)	Average Delay (sec/veh):	15.4
Optimal Cycle:	0	Level Of Service:	C

Approach:	North Bound			South Bound			East Bound			West Bound		
Movement:	L - T - R			L - T - R			L - T - R			L - T - R		
Control:	Stop Sign			Stop Sign			Stop Sign			Stop Sign		
Rights:	Include			Include			Include			Include		
Min. Green:	0	0	0	0	0	0	0	0	0	0	0	0
Lanes:	0 0 1	1 0		1 0 2	0 0		0 0 1!	0 0		0 0 1!	0 0	
Volume Module:												
Base Vol:	0	471	66	73	401	0	55	18	56	32	0	66
Growth Adj:	1.00	1.00	1.00	1.00	1.00	1.00	1.00	1.00	1.00	1.00	1.00	1.00
Initial Bse:	0	471	66	73	401	0	55	18	56	32	0	66
User Adj:	1.00	1.00	1.00	1.00	1.00	1.00	1.00	1.00	1.00	1.00	1.00	1.00
PHF Adj:	0.74	0.74	0.74	0.88	0.88	0.88	0.71	0.71	0.71	0.84	0.84	0.84
PHF Volume:	0	639	90	83	456	0	78	26	79	38	0	78
Reduct Vol:	0	0	0	0	0	0	0	0	0	0	0	0
Reduced Vol:	0	639	90	83	456	0	78	26	79	38	0	78
PCE Adj:	1.00	1.00	1.00	1.00	1.00	1.00	1.00	1.00	1.00	1.00	1.00	1.00
MLF Adj:	1.00	1.00	1.00	1.00	1.00	1.00	1.00	1.00	1.00	1.00	1.00	1.00
FinalVolume:	0	639	90	83	456	0	78	26	79	38	0	78
Saturation Flow Module:												
Adjustment:	1.00	1.00	1.00	1.00	1.00	1.00	1.00	1.00	1.00	1.00	1.00	1.00
Lanes:	0.00	1.75	0.25	1.00	2.00	0.00	0.43	0.14	0.43	0.33	0.00	0.67
Final Sat.:	0	1013	144	505	1090	0	222	73	226	165	0	340
Capacity Analysis Module:												
Vol/Sat:	xxxx	0.63	0.62	0.16	0.42	xxxx	0.35	0.35	0.35	0.23	xxxx	0.23
Crit Moves:		****			****			****		****		
Delay/Veh:	0.0	18.5	17.8	11.0	13.5	0.0	12.8	12.8	12.8	11.4	0.0	11.4
Delay Adj:	1.00	1.00	1.00	1.00	1.00	1.00	1.00	1.00	1.00	1.00	1.00	1.00
AdjDel/Veh:	0.0	18.5	17.8	11.0	13.5	0.0	12.8	12.8	12.8	11.4	0.0	11.4
LOS by Move:	*	C	C	B	B	*	B	B	B	B	*	B
ApproachDel:		18.4			13.1			12.8			11.4	
Delay Adj:		1.00			1.00			1.00			1.00	
ApprAdjDel:		18.4			13.1			12.8			11.4	
LOS by Appr:		C			B			B			B	
AllWayAvgQ:	0.0	1.6	1.5	0.2	0.7	0.0	0.5	0.5	0.5	0.2	0.2	0.2

Note: Queue reported is the number of cars per lane.

LLUH Campus Transformation Project
Existing
Evening Peak Hour

Level Of Service Computation Report
2000 HCM 4-Way Stop Method (Base Volume Alternative)

Intersection #11 Anderson Street (NS) at Prospect Avenue (EW)

Cycle (sec):	0	Critical Vol./Cap.(X):	0.640
Loss Time (sec):	0 (Y+R=4.0 sec)	Average Delay (sec/veh):	17.2
Optimal Cycle:	0	Level Of Service:	C

Approach:	North Bound			South Bound			East Bound			West Bound		
Movement:	L	T	R	L	T	R	L	T	R	L	T	R
Control:	Stop Sign			Stop Sign			Stop Sign			Stop Sign		
Rights:	Include			Include			Include			Include		
Min. Green:	0	0	0	0	0	0	0	0	0	0	0	0
Lanes:	0 0	1 1	0	1 0	2 0	0	0 0	1! 0	0	0 0	1! 0	0
Volume Module:												
Base Vol:	0	433	62	47	445	0	95	32	133	80	0	95
Growth Adj:	1.00	1.00	1.00	1.00	1.00	1.00	1.00	1.00	1.00	1.00	1.00	1.00
Initial Bse:	0	433	62	47	445	0	95	32	133	80	0	95
User Adj:	1.00	1.00	1.00	1.00	1.00	1.00	1.00	1.00	1.00	1.00	1.00	1.00
PHF Adj:	0.97	0.97	0.97	0.86	0.86	0.86	0.80	0.80	0.80	0.88	0.88	0.88
PHF Volume:	0	446	64	55	518	0	119	40	167	91	0	109
Reduct Vol:	0	0	0	0	0	0	0	0	0	0	0	0
Reduced Vol:	0	446	64	55	518	0	119	40	167	91	0	109
PCE Adj:	1.00	1.00	1.00	1.00	1.00	1.00	1.00	1.00	1.00	1.00	1.00	1.00
MLF Adj:	1.00	1.00	1.00	1.00	1.00	1.00	1.00	1.00	1.00	1.00	1.00	1.00
FinalVolume:	0	446	64	55	518	0	119	40	167	91	0	109
Saturation Flow Module:												
Adjustment:	1.00	1.00	1.00	1.00	1.00	1.00	1.00	1.00	1.00	1.00	1.00	1.00
Lanes:	0.00	1.75	0.25	1.00	2.00	0.00	0.37	0.12	0.51	0.46	0.00	0.54
Final Sat.:	0	855	124	458	983	0	186	63	260	212	0	252
Capacity Analysis Module:												
Vol/Sat:	xxxx	0.52	0.51	0.12	0.53	xxxx	0.64	0.64	0.64	0.43	xxxx	0.43
Crit Moves:		****			****			****				****
Delay/Veh:	0.0	17.0	16.6	11.3	17.1	0.0	20.0	20.0	20.0	14.8	0.0	14.8
Delay Adj:	1.00	1.00	1.00	1.00	1.00	1.00	1.00	1.00	1.00	1.00	1.00	1.00
AdjDel/Veh:	0.0	17.0	16.6	11.3	17.1	0.0	20.0	20.0	20.0	14.8	0.0	14.8
LOS by Move:	*	C	C	B	C	*	C	C	C	B	*	B
ApproachDel:		16.9			16.6			20.0			14.8	
Delay Adj:		1.00			1.00			1.00			1.00	
ApprAdjDel:		16.9			16.6			20.0			14.8	
LOS by Appr:		C			C			C			B	
AllWayAvgQ:	0.0	1.0	0.9	0.1	1.0	0.0	1.4	1.4	1.4	0.6	0.6	0.6

Note: Queue reported is the number of cars per lane.

LLUH Campus Transformation Project
Existing
Morning Peak Hour

Level Of Service Computation Report
2000 HCM Unsignalized Method (Base Volume Alternative)

Intersection #12 Anderson Street (NS) at Main Project Access (EW)

Average Delay (sec/veh): 2.7 Worst Case Level Of Service: B[14.5]

Approach:	North Bound			South Bound			East Bound			West Bound		
Movement:	L - T - R			L - T - R			L - T - R			L - T - R		
Control:	Uncontrolled			Uncontrolled			Stop Sign			Stop Sign		
Rights:	Include			Include			Include			Include		
Lanes:	1 0 2 0 0			0 0 1 1 0			1 0 0 0 1			0 0 0 0 0		
Volume Module:												
Base Vol:	155	451	0	0	348	118	44	0	77	0	0	0
Growth Adj:	1.00	1.00	1.00	1.00	1.00	1.00	1.00	1.00	1.00	1.00	1.00	1.00
Initial Bse:	155	451	0	0	348	118	44	0	77	0	0	0
User Adj:	1.00	1.00	1.00	1.00	1.00	1.00	1.00	1.00	1.00	1.00	1.00	1.00
PHF Adj:	0.73	0.73	0.73	0.90	0.90	0.90	0.85	0.85	0.85	1.00	1.00	1.00
PHF Volume:	212	616	0	0	387	131	52	0	90	0	0	0
Reduct Vol:	0	0	0	0	0	0	0	0	0	0	0	0
FinalVolume:	212	616	0	0	387	131	52	0	90	0	0	0
Critical Gap Module:												
Critical Gp:	4.1	xxxx	xxxxx	xxxxx	xxxx	xxxxx	6.8	xxxx	6.9	xxxxx	xxxx	xxxxx
FollowUpTim:	2.2	xxxx	xxxxx	xxxxx	xxxx	xxxxx	3.5	xxxx	3.3	xxxxx	xxxx	xxxxx
Capacity Module:												
Cnflict Vol:	518	xxxx	xxxxx	xxxx	xxxx	xxxxx	1184	xxxx	259	xxxx	xxxx	xxxxx
Potent Cap.:	1058	xxxx	xxxxx	xxxx	xxxx	xxxxx	185	xxxx	746	xxxx	xxxx	xxxxx
Move Cap.:	1058	xxxx	xxxxx	xxxx	xxxx	xxxxx	156	xxxx	746	xxxx	xxxx	xxxxx
Total Cap:	xxxx	xxxx	xxxxx	xxxx	xxxx	xxxxx	269	194	xxxxx	164	169	xxxxx
Volume/Cap:	0.20	xxxx	xxxx	xxxx	xxxx	xxxx	0.19	xxxx	0.12	xxxx	xxxx	xxxx
Level Of Service Module:												
2Way95thQ:	0.7	xxxx	xxxxx	xxxx	xxxx	xxxxx	0.7	xxxx	0.4	xxxx	xxxx	xxxxx
Control Del:	9.3	xxxx	xxxxx	xxxxx	xxxx	xxxxx	21.6	xxxx	10.5	xxxxx	xxxx	xxxxx
LOS by Move:	A	*	*	*	*	*	C	*	B	*	*	*
Movement:	LT - LTR - RT			LT - LTR - RT			LT - LTR - RT			LT - LTR - RT		
Shared Cap.:	xxxx	xxxx	xxxxx	xxxx	xxxx	xxxxx	xxxx	xxxx	xxxxx	xxxx	xxxx	xxxxx
SharedQueue:	xxxxx	xxxx	xxxxx	xxxxx	xxxx	xxxxx	xxxxx	xxxx	xxxxx	xxxxx	xxxx	xxxxx
Shrd ConDel:	xxxxx	xxxx	xxxxx	xxxxx	xxxx	xxxxx	xxxxx	xxxx	xxxxx	xxxxx	xxxx	xxxxx
Shared LOS:	*	*	*	*	*	*	*	*	*	*	*	*
ApproachDel:	xxxxxx			xxxxxx			14.5			xxxxxx		
ApproachLOS:	*			*			B			*		

Note: Queue reported is the number of cars per lane.

LLUH Campus Transformation Project
Existing
Evening Peak Hour

Level Of Service Computation Report
2000 HCM Unsignalized Method (Base Volume Alternative)

Intersection #12 Anderson Street (NS) at Main Project Access (EW)

Average Delay (sec/veh): 3.5 Worst Case Level Of Service: C[16.4]

Approach:	North Bound				South Bound				East Bound				West Bound			
Movement:	L	- T	-	R	L	- T	-	R	L	- T	-	R	L	- T	-	R
Control:	Uncontrolled				Uncontrolled				Stop Sign				Stop Sign			
Rights:	Include				Include				Include				Include			
Lanes:	1	0 2	0	0	0	0 1	1	0	1	0 0	0	1	0	0 0	0	0
Volume Module:																
Base Vol:	101	355	0	0	537		89		105	0	105		0	0	0	
Growth Adj:	1.00	1.00	1.00	1.00	1.00		1.00		1.00	1.00	1.00		1.00	1.00	1.00	
Initial Bse:	101	355	0	0	537		89		105	0	105		0	0	0	
User Adj:	1.00	1.00	1.00	1.00	1.00		1.00		1.00	1.00	1.00		1.00	1.00	1.00	
PHF Adj:	0.90	0.90	0.90	0.94	0.94		0.94		0.89	0.89	0.89		1.00	1.00	1.00	
PHF Volume:	112	393	0	0	571		95		119	0	119		0	0	0	
Reduct Vol:	0	0	0	0	0		0		0	0	0		0	0	0	
FinalVolume:	112	393	0	0	571		95		119	0	119		0	0	0	
Critical Gap Module:																
Critical Gp:	4.1	xxxx	xxxxx	xxxxx	xxxx		xxxxx		6.8	xxxx	6.9		xxxxx	xxxx	xxxxx	
FollowUpTim:	2.2	xxxx	xxxxx	xxxxx	xxxx		xxxxx		3.5	xxxx	3.3		xxxxx	xxxx	xxxxx	
Capacity Module:																
Cnflict Vol:	666	xxxx	xxxxx	xxxx	xxxx		xxxxx		1038	xxxx	333		xxxx	xxxx	xxxxx	
Potent Cap.:	933	xxxx	xxxxx	xxxx	xxxx		xxxxx		230	xxxx	669		xxxx	xxxx	xxxxx	
Move Cap.:	933	xxxx	xxxxx	xxxx	xxxx		xxxxx		209	xxxx	669		xxxx	xxxx	xxxxx	
Total Cap:	xxxx	xxxx	xxxxx	xxxx	xxxx		xxxxx		338	278	xxxxx		275	241	xxxxx	
Volume/Cap:	0.12	xxxx	xxxx	xxxx	xxxx		xxxx		0.35	xxxx	0.18		xxxx	xxxx	xxxx	
Level Of Service Module:																
2Way95thQ:	0.4	xxxx	xxxxx	xxxx	xxxx		xxxxx		1.5	xxxx	0.6		xxxx	xxxx	xxxxx	
Control Del:	9.4	xxxx	xxxxx	xxxxx	xxxx		xxxxx		21.3	xxxx	11.5		xxxxx	xxxx	xxxxx	
LOS by Move:	A	*	*	*	*		*		C	*	B		*	*	*	
Movement:	LT -	LTR -	RT	LT -	LTR -		RT		LT -	LTR -	RT		LT -	LTR -	RT	
Shared Cap.:	xxxx	xxxx	xxxxx	xxxx	xxxx		xxxxx		xxxx	xxxx	xxxxx		xxxx	xxxx	xxxxx	
SharedQueue:	xxxxx	xxxx	xxxxx	xxxxx	xxxx		xxxxx		xxxxx	xxxx	xxxxx		xxxxx	xxxx	xxxxx	
Shrd ConDel:	xxxxx	xxxx	xxxxx	xxxxx	xxxx		xxxxx		xxxxx	xxxx	xxxxx		xxxxx	xxxx	xxxxx	
Shared LOS:	*	*	*	*	*		*		*	*	*		*	*	*	
ApproachDel:	xxxxxx			xxxxxx					16.4				xxxxxx			
ApproachLOS:	*			*					C				*			

Note: Queue reported is the number of cars per lane.

LLUH Campus Transformation Project
Existing
Morning Peak Hour

Level Of Service Computation Report
2000 HCM Unsignalized Method (Base Volume Alternative)

Intersection #13 Anderson Street (NS) at Starr Street (EW)

Average Delay (sec/veh): 0.3 Worst Case Level Of Service: B[12.7]

Approach:	North Bound			South Bound			East Bound			West Bound		
Movement:	L	T	R	L	T	R	L	T	R	L	T	R
Control:	Uncontrolled			Uncontrolled			Stop Sign			Stop Sign		
Rights:	Include			Include			Include			Include		
Lanes:	0 0 1	1 0		1 0 2	0 0		0 0 0	0 0		0 0 1!	0 0	
Volume Module:												
Base Vol:	0	608	12	4	438	0	0	0	0	2	0	14
Growth Adj:	1.00	1.00	1.00	1.00	1.00	1.00	1.00	1.00	1.00	1.00	1.00	1.00
Initial Bse:	0	608	12	4	438	0	0	0	0	2	0	14
User Adj:	1.00	1.00	1.00	1.00	1.00	1.00	1.00	1.00	1.00	1.00	1.00	1.00
PHF Adj:	0.77	0.77	0.77	0.91	0.91	0.91	1.00	1.00	1.00	0.54	0.54	0.54
PHF Volume:	0	794	16	4	481	0	0	0	0	4	0	26
Reduct Vol:	0	0	0	0	0	0	0	0	0	0	0	0
FinalVolume:	0	794	16	4	481	0	0	0	0	4	0	26
Critical Gap Module:												
Critical Gp:	xxxxx	xxxx	xxxxx	4.1	xxxx	xxxxx	xxxxx	xxxx	xxxxx	6.8	6.5	6.9
FollowUpTim:	xxxxx	xxxx	xxxxx	2.2	xxxx	xxxxx	xxxxx	xxxx	xxxxx	3.5	4.0	3.3
Capacity Module:												
Cnflict Vol:	xxxx	xxxx	xxxxx	809	xxxx	xxxxx	xxxx	xxxx	xxxxx	1051	1292	405
Potent Cap.:	xxxx	xxxx	xxxxx	825	xxxx	xxxxx	xxxx	xxxx	xxxxx	226	165	601
Move Cap.:	xxxx	xxxx	xxxxx	825	xxxx	xxxxx	xxxx	xxxx	xxxxx	225	164	601
Volume/Cap:	xxxx	xxxx	xxxx	0.01	xxxx	xxxx	xxxx	xxxx	xxxx	0.02	0.00	0.04
Level Of Service Module:												
2Way95thQ:	xxxx	xxxx	xxxxx	0.0	xxxx	xxxxx	xxxx	xxxx	xxxxx	xxxx	xxxx	xxxxx
Control Del:	xxxxx	xxxx	xxxxx	9.4	xxxx	xxxxx	xxxxx	xxxx	xxxxx	xxxxx	xxxx	xxxxx
LOS by Move:	*	*	*	A	*	*	*	*	*	*	*	*
Movement:	LT -	LTR -	RT	LT -	LTR -	RT	LT -	LTR -	RT	LT -	LTR -	RT
Shared Cap.:	xxxx	xxxx	xxxxx	xxxx	xxxx	xxxxx	xxxx	xxxx	xxxxx	xxxx	497	xxxxx
SharedQueue:	xxxxx	xxxx	xxxxx	xxxxx	xxxx	xxxxx	xxxxx	xxxx	xxxxx	xxxxx	0.2	xxxxx
Shrd ConDel:	xxxxx	xxxx	xxxxx	xxxxx	xxxx	xxxxx	xxxxx	xxxx	xxxxx	xxxxx	12.7	xxxxx
Shared LOS:	*	*	*	*	*	*	*	*	*	*	B	*
ApproachDel:	xxxxxx			xxxxxx			xxxxxx			12.7		
ApproachLOS:	*			*			*			B		

Note: Queue reported is the number of cars per lane.

LLUH Campus Transformation Project
Existing
Evening Peak Hour

Level Of Service Computation Report
2000 HCM Unsignalized Method (Base Volume Alternative)

Intersection #13 Anderson Street (NS) at Starr Street (EW)

Average Delay (sec/veh): 0.7 Worst Case Level Of Service: B[13.1]

Approach:	North Bound			South Bound			East Bound			West Bound		
Movement:	L - T - R			L - T - R			L - T - R			L - T - R		
Control:	Uncontrolled			Uncontrolled			Stop Sign			Stop Sign		
Rights:	Include			Include			Include			Include		
Lanes:	0 0 1 1 0			1 0 2 0 0			0 0 0 0 0			0 0 1! 0 0		
Volume Module:												
Base Vol:	0	448	8	15	611	0	0	0	0	13	0	27
Growth Adj:	1.00	1.00	1.00	1.00	1.00	1.00	1.00	1.00	1.00	1.00	1.00	1.00
Initial Bse:	0	448	8	15	611	0	0	0	0	13	0	27
User Adj:	1.00	1.00	1.00	1.00	1.00	1.00	1.00	1.00	1.00	1.00	1.00	1.00
PHF Adj:	0.91	0.91	0.91	0.92	0.92	0.92	1.00	1.00	1.00	0.67	0.67	0.67
PHF Volume:	0	492	9	16	661	0	0	0	0	19	0	40
Reduct Vol:	0	0	0	0	0	0	0	0	0	0	0	0
FinalVolume:	0	492	9	16	661	0	0	0	0	19	0	40
Critical Gap Module:												
Critical Gp:	xxxxx	xxxx	xxxxx	4.1	xxxx	xxxxx	xxxxx	xxxx	xxxxx	6.8	6.5	6.9
FollowUpTim:	xxxxx	xxxx	xxxxx	2.2	xxxx	xxxxx	xxxxx	xxxx	xxxxx	3.5	4.0	3.3
Capacity Module:												
Cnflict Vol:	xxxx	xxxx	xxxxx	500	xxxx	xxxxx	xxxx	xxxx	xxxxx	859	1189	250
Potent Cap.:	xxxx	xxxx	xxxxx	1074	xxxx	xxxxx	xxxx	xxxx	xxxxx	300	189	756
Move Cap.:	xxxx	xxxx	xxxxx	1074	xxxx	xxxxx	xxxx	xxxx	xxxxx	296	187	756
Volume/Cap:	xxxx	xxxx	xxxx	0.02	xxxx	xxxx	xxxx	xxxx	xxxx	0.07	0.00	0.05
Level Of Service Module:												
2Way95thQ:	xxxx	xxxx	xxxxx	0.0	xxxx	xxxxx	xxxx	xxxx	xxxxx	xxxx	xxxx	xxxxx
Control Del:	xxxxx	xxxx	xxxxx	8.4	xxxx	xxxxx	xxxxx	xxxx	xxxxx	xxxxx	xxxx	xxxxx
LOS by Move:	*	*	*	A	*	*	*	*	*	*	*	*
Movement:	LT - LTR - RT			LT - LTR - RT			LT - LTR - RT			LT - LTR - RT		
Shared Cap.:	xxxx	xxxx	xxxxx	xxxx	xxxx	xxxxx	xxxx	xxxx	xxxxx	xxxx	502	xxxxx
SharedQueue:	xxxxx	xxxx	xxxxx	xxxxx	xxxx	xxxxx	xxxxx	xxxx	xxxxx	xxxxx	0.4	xxxxx
Shrd ConDel:	xxxxx	xxxx	xxxxx	xxxxx	xxxx	xxxxx	xxxxx	xxxx	xxxxx	xxxxx	13.1	xxxxx
Shared LOS:	*	*	*	*	*	*	*	*	*	*	B	*
ApproachDel:	xxxxxx			xxxxxx			xxxxxx			13.1		
ApproachLOS:	*			*			*			B		

Note: Queue reported is the number of cars per lane.

LLUH Campus Transformation Project
Existing
Morning Peak Hour

Level Of Service Computation Report
2000 HCM Operations Method (Base Volume Alternative)

Intersection #14 Anderson Street (NS) at Barton Road (EW)

Cycle (sec): 120 Critical Vol./Cap.(X): 0.888
Loss Time (sec): 8 (Y+R=3.0 sec) Average Delay (sec/veh): 40.8
Optimal Cycle: OPTIMIZED Level Of Service: D

Approach:	North Bound			South Bound			East Bound			West Bound		
Movement:	L - T - R			L - T - R			L - T - R			L - T - R		
Control:	Prot+Permit			Prot+Permit			Protected			Protected		
Rights:	Include			Include			Include			Include		
Min. Green:	28	28	28	28	28	28	10	21	21	10	28	28
Lanes:	1 0	0 1	0	1 0	1 0	1	2 0	2 0	1	1 0	2 0	1
Volume Module:												
Base Vol:	82	142	32	139	167	113	248	754	116	143	685	181
Growth Adj:	1.00	1.00	1.00	1.00	1.00	1.00	1.00	1.00	1.00	1.00	1.00	1.00
Initial Bse:	82	142	32	139	167	113	248	754	116	143	685	181
User Adj:	1.00	1.00	1.00	1.00	1.00	1.00	1.00	1.00	1.00	1.00	1.00	1.00
PHF Adj:	0.74	0.74	0.74	0.91	0.91	0.91	0.82	0.82	0.82	0.80	0.80	0.80
PHF Volume:	112	193	44	152	183	124	303	922	142	180	861	227
Reduct Vol:	0	0	0	0	0	0	0	0	0	0	0	0
Reduced Vol:	112	193	44	152	183	124	303	922	142	180	861	227
PCE Adj:	1.00	1.00	1.00	1.00	1.00	1.00	1.00	1.00	1.00	1.00	1.00	1.00
MLF Adj:	1.00	1.00	1.00	1.00	1.00	1.00	1.00	1.00	1.00	1.00	1.00	1.00
FinalVolume:	112	193	44	152	183	124	303	922	142	180	861	227
Saturation Flow Module:												
Sat/Lane:	1800	1800	1800	1800	1800	1800	1800	1800	1800	1800	1800	1800
Adjustment:	0.94	1.00	1.00	0.94	1.00	1.00	0.89	1.00	1.00	0.94	1.00	1.00
Lanes:	1.00	0.82	0.18	1.00	1.00	1.00	2.00	2.00	1.00	1.00	2.00	1.00
Final Sat.:	1700	1469	331	1700	1800	1800	3200	3600	1800	1700	3600	1800
Capacity Analysis Module:												
Vol/Sat:	0.00	0.13	0.13	0.00	0.10	0.07	0.09	0.26	0.08	0.11	0.24	0.13
Crit Moves:		****		****				****		****		
Green/Cycle:	0.23	0.23	0.23	0.23	0.23	0.23	0.13	0.33	0.33	0.14	0.33	0.33
Volume/Cap:	0.28	0.56	0.56	0.38	0.44	0.29	0.72	0.78	0.24	0.78	0.72	0.38
Delay/Veh:	38.1	42.4	42.4	39.4	40.0	38.3	55.6	39.4	29.4	65.1	37.0	30.8
User DelAdj:	1.00	1.00	1.00	1.00	1.00	1.00	1.00	1.00	1.00	1.00	1.00	1.00
AdjDel/Veh:	38.1	42.4	42.4	39.4	40.0	38.3	55.6	39.4	29.4	65.1	37.0	30.8
LOS by Move:	D	D	D	D	D	D	E	D	C	E	D	C
HCM2kAvgQ:	4	8	8	5	6	4	7	17	4	9	15	6

Note: Queue reported is the number of cars per lane.

LLUH Campus Transformation Project
Existing
Evening Peak Hour

Level Of Service Computation Report
2000 HCM Operations Method (Base Volume Alternative)

Intersection #14 Anderson Street (NS) at Barton Road (EW)

Cycle (sec): 110 Critical Vol./Cap.(X): 0.919
Loss Time (sec): 8 (Y+R=3.0 sec) Average Delay (sec/veh): 37.4
Optimal Cycle: OPTIMIZED Level Of Service: D

Approach:	North Bound			South Bound			East Bound			West Bound		
Movement:	L - T - R			L - T - R			L - T - R			L - T - R		
Control:	Prot+Permit			Prot+Permit			Protected			Protected		
Rights:	Include			Include			Include			Include		
Min. Green:	28	28	28	28	28	28	10	21	21	10	28	28
Lanes:	1 0	0 1	0	1 0	1 0	1	2 0	2 0	1	1 0	2 0	1
Volume Module:												
Base Vol:	184	131	79	255	120	263	152	815	53	54	777	166
Growth Adj:	1.00	1.00	1.00	1.00	1.00	1.00	1.00	1.00	1.00	1.00	1.00	1.00
Initial Bse:	184	131	79	255	120	263	152	815	53	54	777	166
User Adj:	1.00	1.00	1.00	1.00	1.00	1.00	1.00	1.00	1.00	1.00	1.00	1.00
PHF Adj:	0.73	0.73	0.73	0.90	0.90	0.90	0.90	0.90	0.90	0.96	0.96	0.96
PHF Volume:	253	180	109	282	133	291	170	909	59	56	808	173
Reduct Vol:	0	0	0	0	0	0	0	0	0	0	0	0
Reduced Vol:	253	180	109	282	133	291	170	909	59	56	808	173
PCE Adj:	1.00	1.00	1.00	1.00	1.00	1.00	1.00	1.00	1.00	1.00	1.00	1.00
MLF Adj:	1.00	1.00	1.00	1.00	1.00	1.00	1.00	1.00	1.00	1.00	1.00	1.00
FinalVolume:	253	180	109	282	133	291	170	909	59	56	808	173
Saturation Flow Module:												
Sat/Lane:	1800	1800	1800	1800	1800	1800	1800	1800	1800	1800	1800	1800
Adjustment:	0.94	1.00	1.00	0.94	1.00	1.00	0.89	1.00	1.00	0.94	1.00	1.00
Lanes:	1.00	0.62	0.38	1.00	1.00	1.00	2.00	2.00	1.00	1.00	2.00	1.00
Final Sat.:	1700	1123	677	1700	1800	1800	3200	3600	1800	1700	3600	1800
Capacity Analysis Module:												
Vol/Sat:	0.00	0.16	0.16	0.00	0.07	0.16	0.05	0.25	0.03	0.03	0.22	0.10
Crit Moves:		****		****				****		****		
Green/Cycle:	0.25	0.25	0.25	0.25	0.25	0.25	0.11	0.33	0.33	0.09	0.31	0.31
Volume/Cap:	0.59	0.63	0.63	0.65	0.29	0.63	0.48	0.77	0.10	0.36	0.73	0.31
Delay/Veh:	38.0	39.3	39.3	40.2	33.3	39.4	47.0	36.5	25.8	48.5	36.4	29.4
User DelAdj:	1.00	1.00	1.00	1.00	1.00	1.00	1.00	1.00	1.00	1.00	1.00	1.00
AdjDel/Veh:	38.0	39.3	39.3	40.2	33.3	39.4	47.0	36.5	25.8	48.5	36.4	29.4
LOS by Move:	D	D	D	D	C	D	D	D	C	D	D	C
HCM2kAvgQ:	9	9	9	10	4	10	4	15	1	2	13	4

Note: Queue reported is the number of cars per lane.

Opening Year (2013) Without Project

LLUH Campus Transformation Project
Year 2013 Without Project
Morning Peak Hour

Level Of Service Computation Report
2000 HCM 4-Way Stop Method (Base Volume Alternative)

****

Intersection #1 Campus Street (NS) at Stewart Street (EW)

****

Cycle (sec):	0	Critical Vol./Cap.(X):	0.895
Loss Time (sec):	0 (Y+R=4.0 sec)	Average Delay (sec/veh):	25.7
Optimal Cycle:	0	Level Of Service:	D

****

Approach:	North Bound			South Bound			East Bound			West Bound		
Movement:	L -	T -	R	L -	T -	R	L -	T -	R	L -	T -	R
Control:	Stop Sign			Stop Sign			Stop Sign			Stop Sign		
Rights:	Include			Include			Include			Include		
Min. Green:	0	0	0	0	0	0	0	0	0	0	0	0
Lanes:	0 1	0 0	1	0 0	1!	0 0	0 0	1!	0 0	0 1	0 0	1
Volume Module:												
Base Vol:	12	271	227	10	38	1	41	73	26	332	38	281
Growth Adj:	1.00	1.00	1.00	1.00	1.00	1.00	1.00	1.00	1.00	1.00	1.00	1.00
Initial Bse:	12	271	227	10	38	1	41	73	26	332	38	281
User Adj:	1.00	1.00	1.00	1.00	1.00	1.00	1.00	1.00	1.00	1.00	1.00	1.00
PHF Adj:	0.79	0.79	0.79	0.85	0.85	0.85	0.68	0.68	0.68	0.85	0.85	0.85
PHF Volume:	15	344	288	12	45	1	61	108	38	393	45	332
Reduct Vol:	0	0	0	0	0	0	0	0	0	0	0	0
Reduced Vol:	15	344	288	12	45	1	61	108	38	393	45	332
PCE Adj:	1.00	1.00	1.00	1.00	1.00	1.00	1.00	1.00	1.00	1.00	1.00	1.00
MLF Adj:	1.00	1.00	1.00	1.00	1.00	1.00	1.00	1.00	1.00	1.00	1.00	1.00
FinalVolume:	15	344	288	12	45	1	61	108	38	393	45	332
Saturation Flow Module:												
Adjustment:	1.00	1.00	1.00	1.00	1.00	1.00	1.00	1.00	1.00	1.00	1.00	1.00
Lanes:	0.04	0.96	1.00	0.20	0.78	0.02	0.29	0.52	0.19	0.90	0.10	1.00
Final Sat.:	21	475	549	85	323	9	140	249	89	438	50	575
Capacity Analysis Module:												
Vol/Sat:	0.72	0.72	0.52	0.14	0.14	0.14	0.43	0.43	0.43	0.90	0.90	0.58
Crit Moves:		****				****		****		****		
Delay/Veh:	26.0	26.0	15.9	12.3	12.3	12.3	15.6	15.6	15.6	45.3	45.3	16.8
Delay Adj:	1.00	1.00	1.00	1.00	1.00	1.00	1.00	1.00	1.00	1.00	1.00	1.00
AdjDel/Veh:	26.0	26.0	15.9	12.3	12.3	12.3	15.6	15.6	15.6	45.3	45.3	16.8
LOS by Move:	D	D	C	B	B	B	C	C	C	E	E	C
ApproachDel:		21.5			12.3			15.6			33.0	
Delay Adj:		1.00			1.00			1.00			1.00	
ApprAdjDel:		21.5			12.3			15.6			33.0	
LOS by Appr:		C			B			C			D	
AllWayAvgQ:	2.2	2.2	1.0	0.1	0.1	0.1	0.7	0.7	0.7	4.8	4.8	1.3

****

Note: Queue reported is the number of cars per lane.

****

LLUH Campus Transformation Project
Year 2013 Without Project
Evening Peak Hour

Level Of Service Computation Report
2000 HCM 4-Way Stop Method (Base Volume Alternative)

****

Intersection #1 Campus Street (NS) at Stewart Street (EW)

****

Cycle (sec):	0	Critical Vol./Cap.(X):	0.752
Loss Time (sec):	0 (Y+R=4.0 sec)	Average Delay (sec/veh):	18.6
Optimal Cycle:	0	Level Of Service:	C

****

Approach:	North Bound			South Bound			East Bound			West Bound		
Movement:	L -	T -	R	L -	T -	R	L -	T -	R	L -	T -	R
Control:	Stop Sign			Stop Sign			Stop Sign			Stop Sign		
Rights:	Include			Include			Include			Include		
Min. Green:	0	0	0	0	0	0	0	0	0	0	0	0
Lanes:	0 1	0 0	1	0 0	1! 0	0	0 0	1! 0	0	0 1	0 0	1
Volume Module:												
Base Vol:	17	84	239	121	227	13	5	32	26	201	71	101
Growth Adj:	1.00	1.00	1.00	1.00	1.00	1.00	1.00	1.00	1.00	1.00	1.00	1.00
Initial Bse:	17	84	239	121	227	13	5	32	26	201	71	101
User Adj:	1.00	1.00	1.00	1.00	1.00	1.00	1.00	1.00	1.00	1.00	1.00	1.00
PHF Adj:	0.94	0.94	0.94	0.91	0.91	0.91	0.66	0.66	0.66	0.89	0.89	0.89
PHF Volume:	18	89	253	132	248	14	8	48	39	226	80	113
Reduct Vol:	0	0	0	0	0	0	0	0	0	0	0	0
Reduced Vol:	18	89	253	132	248	14	8	48	39	226	80	113
PCE Adj:	1.00	1.00	1.00	1.00	1.00	1.00	1.00	1.00	1.00	1.00	1.00	1.00
MLF Adj:	1.00	1.00	1.00	1.00	1.00	1.00	1.00	1.00	1.00	1.00	1.00	1.00
FinalVolume:	18	89	253	132	248	14	8	48	39	226	80	113
Saturation Flow Module:												
Adjustment:	1.00	1.00	1.00	1.00	1.00	1.00	1.00	1.00	1.00	1.00	1.00	1.00
Lanes:	0.17	0.83	1.00	0.33	0.63	0.04	0.08	0.51	0.41	0.74	0.26	1.00
Final Sat.:	84	415	561	176	330	19	34	219	178	357	126	562
Capacity Analysis Module:												
Vol/Sat:	0.21	0.21	0.45	0.75	0.75	0.75	0.22	0.22	0.22	0.63	0.63	0.20
Crit Moves:			****	****				****			****	
Delay/Veh:	11.4	11.4	13.4	26.3	26.3	26.3	12.2	12.2	12.2	20.7	20.7	10.3
Delay Adj:	1.00	1.00	1.00	1.00	1.00	1.00	1.00	1.00	1.00	1.00	1.00	1.00
AdjDel/Veh:	11.4	11.4	13.4	26.3	26.3	26.3	12.2	12.2	12.2	20.7	20.7	10.3
LOS by Move:	B	B	B	D	D	D	B	B	B	C	C	B
ApproachDel:	12.8			26.3			12.2			17.9		
Delay Adj:	1.00			1.00			1.00			1.00		
ApprAdjDel:	12.8			26.3			12.2			17.9		
LOS by Appr:	B			D			B			C		
AllWayAvgQ:	0.2	0.2	0.7	2.4	2.4	2.4	0.2	0.2	0.2	1.4	1.4	0.2

****

Note: Queue reported is the number of cars per lane.

****

LLUH Campus Transformation Project
Year 2013 Without Project
Morning Peak Hour

Level Of Service Computation Report
2000 HCM 4-Way Stop Method (Base Volume Alternative)

Intersection #2 Campus Street (NS) at University Avenue (EW)

Cycle (sec):	0	Critical Vol./Cap.(X):	0.747
Loss Time (sec):	0 (Y+R=4.0 sec)	Average Delay (sec/veh):	19.5
Optimal Cycle:	0	Level Of Service:	C

Approach:	North Bound			South Bound			East Bound			West Bound		
Movement:	L -	T -	R	L -	T -	R	L -	T -	R	L -	T -	R
Control:	Stop Sign			Stop Sign			Stop Sign			Stop Sign		
Rights:	Include			Include			Include			Include		
Min. Green:	0	0	0	0	0	0	0	0	0	0	0	0
Lanes:	0 1	0 0	0	0 0	0 1	0	0 0	1! 0	0	0 0	0 0	0
Volume Module:												
Base Vol:	45	307	0	0	163	177	233	0	77	0	0	0
Growth Adj:	1.00	1.00	1.00	1.00	1.00	1.00	1.00	1.00	1.00	1.00	1.00	1.00
Initial Bse:	45	307	0	0	163	177	233	0	77	0	0	0
User Adj:	1.00	1.00	1.00	1.00	1.00	1.00	1.00	1.00	1.00	1.00	1.00	1.00
PHF Adj:	0.76	0.76	0.76	0.84	0.84	0.84	0.82	0.82	0.82	1.00	1.00	1.00
PHF Volume:	59	403	0	0	195	212	283	0	94	0	0	0
Reduct Vol:	0	0	0	0	0	0	0	0	0	0	0	0
Reduced Vol:	59	403	0	0	195	212	283	0	94	0	0	0
PCE Adj:	1.00	1.00	1.00	1.00	1.00	1.00	1.00	1.00	1.00	1.00	1.00	1.00
MLF Adj:	1.00	1.00	1.00	1.00	1.00	1.00	1.00	1.00	1.00	1.00	1.00	1.00
FinalVolume:	59	403	0	0	195	212	283	0	94	0	0	0
Saturation Flow Module:												
Adjustment:	1.00	1.00	1.00	1.00	1.00	1.00	1.00	1.00	1.00	1.00	1.00	1.00
Lanes:	0.13	0.87	0.00	0.00	0.48	0.52	0.75	0.00	0.25	0.00	0.00	0.00
Final Sat.:	79	540	0	0	305	332	432	0	143	0	0	0
Capacity Analysis Module:												
Vol/Sat:	0.75	0.75	xxxx	xxxx	0.64	0.64	0.65	xxxx	0.65	xxxx	xxxx	xxxx
Crit Moves:	****				****				****			
Delay/Veh:	22.6	22.6	0.0	0.0	16.9	16.9	18.5	0.0	18.5	0.0	0.0	0.0
Delay Adj:	1.00	1.00	1.00	1.00	1.00	1.00	1.00	1.00	1.00	1.00	1.00	1.00
AdjDel/Veh:	22.6	22.6	0.0	0.0	16.9	16.9	18.5	0.0	18.5	0.0	0.0	0.0
LOS by Move:	C	C	*	*	C	C	C	*	C	*	*	*
ApproachDel:	22.6			16.9			18.5			xxxxxx		
Delay Adj:	1.00			1.00			1.00			xxxxx		
ApprAdjDel:	22.6			16.9			18.5			xxxxxx		
LOS by Appr:	C			C			C			*		
AllWayAvgQ:	2.4	2.4	2.4	1.5	1.5	1.5	1.5	1.5	1.5	0.0	0.0	0.0

Note: Queue reported is the number of cars per lane.

LLUH Campus Transformation Project
Year 2013 Without Project
Evening Peak Hour

Level Of Service Computation Report
2000 HCM 4-Way Stop Method (Base Volume Alternative)

Intersection #2 Campus Street (NS) at University Avenue (EW)

Cycle (sec):	0	Critical Vol./Cap.(X):	0.643
Loss Time (sec):	0 (Y+R=4.0 sec)	Average Delay (sec/veh):	13.2
Optimal Cycle:	0	Level Of Service:	B

Approach:	North Bound			South Bound			East Bound			West Bound		
Movement:	L -	T -	R	L -	T -	R	L -	T -	R	L -	T -	R
Control:	Stop Sign			Stop Sign			Stop Sign			Stop Sign		
Rights:	Include			Include			Include			Include		
Min. Green:	0	0	0	0	0	0	0	0	0	0	0	0
Lanes:	0 1	0 0	0	0 0	0 1	0	0 0	1! 0	0	1 0	0 0	0
Volume Module:												
Base Vol:	72	155	0	0	227	219	133	0	56	3	0	0
Growth Adj:	1.00	1.00	1.00	1.00	1.00	1.00	1.00	1.00	1.00	1.00	1.00	1.00
Initial Bse:	72	155	0	0	227	219	133	0	56	3	0	0
User Adj:	1.00	1.00	1.00	1.00	1.00	1.00	1.00	1.00	1.00	1.00	1.00	1.00
PHF Adj:	0.89	0.89	0.89	0.91	0.91	0.91	0.82	0.82	0.82	0.25	0.25	0.25
PHF Volume:	81	175	0	0	248	240	162	0	68	12	0	0
Reduct Vol:	0	0	0	0	0	0	0	0	0	0	0	0
Reduced Vol:	81	175	0	0	248	240	162	0	68	12	0	0
PCE Adj:	1.00	1.00	1.00	1.00	1.00	1.00	1.00	1.00	1.00	1.00	1.00	1.00
MLF Adj:	1.00	1.00	1.00	1.00	1.00	1.00	1.00	1.00	1.00	1.00	1.00	1.00
FinalVolume:	81	175	0	0	248	240	162	0	68	12	0	0
Saturation Flow Module:												
Adjustment:	1.00	1.00	1.00	1.00	1.00	1.00	1.00	1.00	1.00	1.00	1.00	1.00
Lanes:	0.32	0.68	0.00	0.00	0.51	0.49	0.70	0.01	0.29	1.00	0.00	0.00
Final Sat.:	209	451	0	0	386	373	422	0	178	489	0	0
Capacity Analysis Module:												
Vol/Sat:	0.39	0.39	xxxx	xxxx	0.64	0.64	0.38	0.00	0.38	0.02	xxxx	xxxx
Crit Moves:		****				****	****			****		
Delay/Veh:	11.3	11.3	0.0	0.0	15.1	15.1	11.6	11.6	11.6	9.4	0.0	0.0
Delay Adj:	1.00	1.00	1.00	1.00	1.00	1.00	1.00	1.00	1.00	1.00	1.00	1.00
AdjDel/Veh:	11.3	11.3	0.0	0.0	15.1	15.1	11.6	11.6	11.6	9.4	0.0	0.0
LOS by Move:	B	B	*	*	C	C	B	B	B	A	*	*
ApproachDel:		11.3			15.1			11.6			9.4	
Delay Adj:		1.00			1.00			1.00			1.00	
ApprAdjDel:		11.3			15.1			11.6			9.4	
LOS by Appr:		B			C			B			A	
AllWayAvgQ:	0.6	0.6	0.6	1.6	1.6	1.6	0.5	0.5	0.5	0.0	0.0	0.0

Note: Queue reported is the number of cars per lane.

LLUH Campus Transformation Project
Year 2013 Without Project
Morning Peak Hour

Level Of Service Computation Report
2000 HCM Operations Method (Base Volume Alternative)

****

Intersection #3 Campus Street (NS) at Prospect Avenue (EW)

****

Cycle (sec): 105 Critical Vol./Cap.(X): 0.337
Loss Time (sec): 4 (Y+R=3.0 sec) Average Delay (sec/veh): 6.1
Optimal Cycle: OPTIMIZED Level Of Service: A

****

Approach:	North Bound			South Bound			East Bound			West Bound		
Movement:	L -	T -	R	L -	T -	R	L -	T -	R	L -	T -	R
Control:	Permitted			Permitted			Permitted			Permitted		
Rights:	Include			Include			Include			Include		
Min. Green:	18	18	18	18	18	18	21	21	21	0	0	0
Lanes:	1 0	1 0	0	0 1	0 0	1	0 0	1! 0	0	0 0	0 0	0
Volume Module:												
Base Vol:	176	418	0	10	167	37	10	0	46	0	0	0
Growth Adj:	1.00	1.00	1.00	1.00	1.00	1.00	1.00	1.00	1.00	1.00	1.00	1.00
Initial Bse:	176	418	0	10	167	37	10	0	46	0	0	0
User Adj:	1.00	1.00	1.00	1.00	1.00	1.00	1.00	1.00	1.00	1.00	1.00	1.00
PHF Adj:	0.82	0.82	0.82	0.89	0.89	0.89	0.76	0.76	0.76	1.00	1.00	1.00
PHF Volume:	215	510	0	11	187	41	13	0	60	0	0	0
Reduct Vol:	0	0	0	0	0	0	0	0	0	0	0	0
Reduced Vol:	215	510	0	11	187	41	13	0	60	0	0	0
PCE Adj:	1.00	1.00	1.00	1.00	1.00	1.00	1.00	1.00	1.00	1.00	1.00	1.00
MLF Adj:	1.00	1.00	1.00	1.00	1.00	1.00	1.00	1.00	1.00	1.00	1.00	1.00
FinalVolume:	215	510	0	11	187	41	13	0	60	0	0	0
Saturation Flow Module:												
Sat/Lane:	1800	1800	1800	1800	1800	1800	1800	1800	1800	1800	1800	1800
Adjustment:	0.94	1.00	1.00	1.00	1.00	1.00	1.00	1.00	1.00	0.94	1.00	1.00
Lanes:	1.00	1.00	0.00	0.06	0.94	1.00	0.18	0.00	0.82	0.00	0.00	0.00
Final Sat.:	1700	1800	0	102	1698	1800	321	0	1479	0	0	0
Capacity Analysis Module:												
Vol/Sat:	0.13	0.28	0.00	0.11	0.11	0.02	0.04	0.00	0.04	0.00	0.00	0.00
Crit Moves:		****					****					
Green/Cycle:	0.76	0.76	0.00	0.76	0.76	0.76	0.20	0.00	0.20	0.00	0.00	0.00
Volume/Cap:	0.17	0.37	0.00	0.14	0.14	0.03	0.20	0.00	0.20	0.00	0.00	0.00
Delay/Veh:	3.5	4.3	0.0	3.4	3.4	3.1	35.3	0.0	35.3	0.0	0.0	0.0
User DelAdj:	1.00	1.00	1.00	1.00	1.00	1.00	1.00	1.00	1.00	1.00	1.00	1.00
AdjDel/Veh:	3.5	4.3	0.0	3.4	3.4	3.1	35.3	0.0	35.3	0.0	0.0	0.0
LOS by Move:	A	A	A	A	A	A	D	A	D	A	A	A
HCM2kAvgQ:	2	6	0	2	2	0	2	0	2	0	0	0

****

Note: Queue reported is the number of cars per lane.

****

LLUH Campus Transformation Project
Year 2013 Without Project
Evening Peak Hour

Level Of Service Computation Report
2000 HCM Operations Method (Base Volume Alternative)

Intersection #3 Campus Street (NS) at Prospect Avenue (EW)

Cycle (sec): 60 Critical Vol./Cap.(X): 0.295
Loss Time (sec): 4 (Y+R=3.0 sec) Average Delay (sec/veh): 9.0
Optimal Cycle: OPTIMIZED Level Of Service: A

Approach:	North Bound			South Bound			East Bound			West Bound		
Movement:	L -	T -	R	L -	T -	R	L -	T -	R	L -	T -	R
Control:	Permitted			Permitted			Permitted			Permitted		
Rights:	Include			Include			Include			Include		
Min. Green:	18	18	18	18	18	18	21	21	21	0	0	0
Lanes:	1 0	0 1	0	0 0	1 0	1	0 0	1! 0	0	0 0	0 0	0
Volume Module:												
Base Vol:	25	189	3	0	278	25	11	0	141	0	0	0
Growth Adj:	1.00	1.00	1.00	1.00	1.00	1.00	1.00	1.00	1.00	1.00	1.00	1.00
Initial Bse:	25	189	3	0	278	25	11	0	141	0	0	0
User Adj:	1.00	1.00	1.00	1.00	1.00	1.00	1.00	1.00	1.00	1.00	1.00	1.00
PHF Adj:	0.92	0.92	0.92	0.99	0.99	0.99	0.71	0.71	0.71	1.00	1.00	1.00
PHF Volume:	27	205	3	0	282	25	15	0	198	0	0	0
Reduct Vol:	0	0	0	0	0	0	0	0	0	0	0	0
Reduced Vol:	27	205	3	0	282	25	15	0	198	0	0	0
PCE Adj:	1.00	1.00	1.00	1.00	1.00	1.00	1.00	1.00	1.00	1.00	1.00	1.00
MLF Adj:	1.00	1.00	1.00	1.00	1.00	1.00	1.00	1.00	1.00	1.00	1.00	1.00
FinalVolume:	27	205	3	0	282	25	15	0	198	0	0	0
Saturation Flow Module:												
Sat/Lane:	1800	1800	1800	1800	1800	1800	1800	1800	1800	1800	1800	1800
Adjustment:	0.94	1.00	1.00	0.94	1.00	1.00	1.00	1.00	1.00	0.94	1.00	1.00
Lanes:	1.00	0.98	0.02	0.00	1.00	1.00	0.07	0.00	0.93	0.00	0.00	0.00
Final Sat.:	1700	1772	28	0	1800	1800	130	0	1670	0	0	0
Capacity Analysis Module:												
Vol/Sat:	0.02	0.12	0.12	0.00	0.16	0.01	0.12	0.00	0.12	0.00	0.00	0.00
Crit Moves:					****		****					
Green/Cycle:	0.53	0.53	0.53	0.00	0.53	0.53	0.40	0.00	0.40	0.00	0.00	0.00
Volume/Cap:	0.03	0.22	0.22	0.00	0.30	0.03	0.30	0.00	0.30	0.00	0.00	0.00
Delay/Veh:	6.7	7.6	7.6	0.0	8.0	6.7	12.4	0.0	12.4	0.0	0.0	0.0
User DelAdj:	1.00	1.00	1.00	1.00	1.00	1.00	1.00	1.00	1.00	1.00	1.00	1.00
AdjDel/Veh:	6.7	7.6	7.6	0.0	8.0	6.7	12.4	0.0	12.4	0.0	0.0	0.0
LOS by Move:	A	A	A	A	A	A	B	A	B	A	A	A
HCM2kAvgQ:	0	2	2	0	3	0	3	0	3	0	0	0

Note: Queue reported is the number of cars per lane.

LLUH Campus Transformation Project
Year 2013 Without Project
Morning Peak Hour

Level Of Service Computation Report
2000 HCM Unsignalized Method (Base Volume Alternative)

Intersection #4 Campus Street (NS) at San Juan Street (EW)

Average Delay (sec/veh): 1.5 Worst Case Level Of Service: C[16.7]

Approach:	North Bound			South Bound			East Bound			West Bound		
Movement:	L	T	R	L	T	R	L	T	R	L	T	R
Control:	Uncontrolled			Uncontrolled			Stop Sign			Stop Sign		
Rights:	Include			Include			Include			Include		
Lanes:	0 1 0 0 0			0 0 1 1 0			0 0 1! 0 0			0 0 0 0 0		
Volume Module:												
Base Vol:	49	774	0	0	165	11	26	0	51	0	0	0
Growth Adj:	1.00	1.00	1.00	1.00	1.00	1.00	1.00	1.00	1.00	1.00	1.00	1.00
Initial Bse:	49	774	0	0	165	11	26	0	51	0	0	0
User Adj:	1.00	1.00	1.00	1.00	1.00	1.00	1.00	1.00	1.00	1.00	1.00	1.00
PHF Adj:	0.85	0.85	0.85	0.77	0.77	0.77	0.85	0.85	0.85	1.00	1.00	1.00
PHF Volume:	58	911	0	0	215	14	31	0	60	0	0	0
Reduct Vol:	0	0	0	0	0	0	0	0	0	0	0	0
FinalVolume:	58	911	0	0	215	14	31	0	60	0	0	0
Critical Gap Module:												
Critical Gp:	4.1	xxxx	xxxxx	xxxxx	xxxx	xxxxx	6.4	6.5	6.2	xxxxx	xxxx	xxxxx
FollowUpTim:	2.2	xxxx	xxxxx	xxxxx	xxxx	xxxxx	3.5	4.0	3.3	xxxxx	xxxx	xxxxx
Capacity Module:												
Cnflict Vol:	229	xxxx	xxxxx	xxxx	xxxx	xxxxx	1248	1248	114	xxxx	xxxx	xxxxx
Potent Cap.:	1351	xxxx	xxxxx	xxxx	xxxx	xxxxx	193	175	944	xxxx	xxxx	xxxxx
Move Cap.:	1351	xxxx	xxxxx	xxxx	xxxx	xxxxx	187	167	944	xxxx	xxxx	xxxxx
Volume/Cap:	0.04	xxxx	xxxx	xxxx	xxxx	xxxx	0.16	0.00	0.06	xxxx	xxxx	xxxx
Level Of Service Module:												
2Way95thQ:	0.1	xxxx	xxxxx	xxxx	xxxx	xxxxx	xxxx	xxxx	xxxxx	xxxx	xxxx	xxxxx
Control Del:	7.8	xxxx	xxxxx	xxxxx	xxxx	xxxxx	xxxxx	xxxx	xxxxx	xxxxx	xxxx	xxxxx
LOS by Move:	A	*	*	*	*	*	*	*	*	*	*	*
Movement:	LT	LTR	RT	LT	LTR	RT	LT	LTR	RT	LT	LTR	RT
Shared Cap.:	xxxx	xxxx	xxxxx	xxxx	xxxx	xxxxx	xxxx	398	xxxxx	xxxx	xxxx	xxxxx
SharedQueue:	0.1	xxxx	xxxxx	xxxxx	xxxx	xxxxx	xxxxx	0.9	xxxxx	xxxxx	xxxx	xxxxx
Shrd ConDel:	7.8	xxxx	xxxxx	xxxxx	xxxx	xxxxx	xxxxx	16.7	xxxxx	xxxxx	xxxx	xxxxx
Shared LOS:	A	*	*	*	*	*	*	C	*	*	*	*
ApproachDel:	xxxxxx			xxxxxx			16.7			xxxxxx		
ApproachLOS:	*			*			C			*		

Note: Queue reported is the number of cars per lane.

LLUH Campus Transformation Project
Year 2013 Without Project
Evening Peak Hour

Level Of Service Computation Report
2000 HCM Unsignalized Method (Base Volume Alternative)

Intersection #4 Campus Street (NS) at San Juan Street (EW)

Average Delay (sec/veh): 1.1 Worst Case Level Of Service: B[12.0]

Approach:	North Bound			South Bound			East Bound			West Bound		
Movement:	L - T - R			L - T - R			L - T - R			L - T - R		
Control:	Uncontrolled			Uncontrolled			Stop Sign			Stop Sign		
Rights:	Include			Include			Include			Include		
Lanes:	0 1 0 0 0			0 0 1 1 0			0 0 1! 0 0			0 0 0 0 0		
Volume Module:												
Base Vol:	56	247	0	0	574	24	3	0	26	0	0	0
Growth Adj:	1.00	1.00	1.00	1.00	1.00	1.00	1.00	1.00	1.00	1.00	1.00	1.00
Initial Bse:	56	247	0	0	574	24	3	0	26	0	0	0
User Adj:	1.00	1.00	1.00	1.00	1.00	1.00	1.00	1.00	1.00	1.00	1.00	1.00
PHF Adj:	0.88	0.88	0.88	0.83	0.83	0.83	0.58	0.58	0.58	1.00	1.00	1.00
PHF Volume:	64	281	0	0	694	29	5	0	45	0	0	0
Reduct Vol:	0	0	0	0	0	0	0	0	0	0	0	0
FinalVolume:	64	281	0	0	694	29	5	0	45	0	0	0
Critical Gap Module:												
Critical Gp:	4.1	xxxx	xxxxx	xxxxx	xxxx	xxxxx	6.4	6.5	6.2	xxxxx	xxxx	xxxxx
FollowUpTim:	2.2	xxxx	xxxxx	xxxxx	xxxx	xxxxx	3.5	4.0	3.3	xxxxx	xxxx	xxxxx
Capacity Module:												
Cnflict Vol:	723	xxxx	xxxxx	xxxx	xxxx	xxxxx	1116	1116	361	xxxx	xxxx	xxxxx
Potent Cap.:	889	xxxx	xxxxx	xxxx	xxxx	xxxxx	232	209	688	xxxx	xxxx	xxxxx
Move Cap.:	889	xxxx	xxxxx	xxxx	xxxx	xxxxx	219	194	688	xxxx	xxxx	xxxxx
Volume/Cap:	0.07	xxxx	xxxx	xxxx	xxxx	xxxx	0.02	0.00	0.06	xxxx	xxxx	xxxx
Level Of Service Module:												
2Way95thQ:	0.2	xxxx	xxxxx	xxxx	xxxx	xxxxx	xxxx	xxxx	xxxxx	xxxx	xxxx	xxxxx
Control Del:	9.4	xxxx	xxxxx	xxxxx	xxxx	xxxxx	xxxxx	xxxx	xxxxx	xxxxx	xxxx	xxxxx
LOS by Move:	A	*	*	*	*	*	*	*	*	*	*	*
Movement:	LT - LTR - RT			LT - LTR - RT			LT - LTR - RT			LT - LTR - RT		
Shared Cap.:	xxxx	xxxx	xxxxx	xxxx	xxxx	xxxxx	xxxx	563	xxxxx	xxxx	xxxx	xxxxx
SharedQueue:	0.2	xxxx	xxxxx	xxxxx	xxxx	xxxxx	xxxxx	0.3	xxxxx	xxxxx	xxxx	xxxxx
Shrd ConDel:	9.4	xxxx	xxxxx	xxxxx	xxxx	xxxxx	xxxxx	12.0	xxxxx	xxxxx	xxxx	xxxxx
Shared LOS:	A	*	*	*	*	*	*	B	*	*	*	*
ApproachDel:	xxxxxx			xxxxxx			12.0			xxxxxx		
ApproachLOS:	*			*			B			*		

Note: Queue reported is the number of cars per lane.

LLUH Campus Transformation Project
Year 2013 Without Project
Morning Peak Hour

Level Of Service Computation Report
2000 HCM Operations Method (Base Volume Alternative)

Intersection #5 Campus Street (NS) at Barton Road (EW)

Cycle (sec): 130 Critical Vol./Cap.(X): 0.922
Loss Time (sec): 8 (Y+R=3.0 sec) Average Delay (sec/veh): 42.6
Optimal Cycle: OPTIMIZED Level Of Service: D

Approach:	North Bound			South Bound			East Bound			West Bound		
Movement:	L - T - R			L - T - R			L - T - R			L - T - R		
Control:	Prot+Permit			Prot+Permit			Protected			Protected		
Rights:	Include			Include			Include			Include		
Min. Green:	28	28	28	28	28	28	10	18	18	10	21	21
Lanes:	1 0	0 1	0	1 0	1 0	1	1 0	2 0	1	1 0	2 0	1
Volume Module:												
Base Vol:	111	138	11	143	31	66	189	1056	33	17	482	430
Growth Adj:	1.00	1.00	1.00	1.00	1.00	1.00	1.00	1.00	1.00	1.00	1.00	1.00
Initial Bse:	111	138	11	143	31	66	189	1056	33	17	482	430
User Adj:	1.00	1.00	1.00	1.00	1.00	1.00	1.00	1.00	1.00	1.00	1.00	1.00
PHF Adj:	0.76	0.76	0.76	0.79	0.79	0.79	0.86	0.86	0.86	0.78	0.78	0.78
PHF Volume:	146	182	14	182	39	84	219	1221	38	22	618	551
Reduct Vol:	0	0	0	0	0	0	0	0	0	0	0	0
Reduced Vol:	146	182	14	182	39	84	219	1221	38	22	618	551
PCE Adj:	1.00	1.00	1.00	1.00	1.00	1.00	1.00	1.00	1.00	1.00	1.00	1.00
MLF Adj:	1.00	1.00	1.00	1.00	1.00	1.00	1.00	1.00	1.00	1.00	1.00	1.00
FinalVolume:	146	182	14	182	39	84	219	1221	38	22	618	551
Saturation Flow Module:												
Sat/Lane:	1800	1800	1800	1800	1800	1800	1800	1800	1800	1800	1800	1800
Adjustment:	0.94	1.00	1.00	0.94	1.00	1.00	0.94	1.00	1.00	0.94	1.00	1.00
Lanes:	1.00	0.93	0.07	1.00	1.00	1.00	1.00	2.00	1.00	1.00	2.00	1.00
Final Sat.:	1700	1667	133	1700	1800	1800	1700	3600	1800	1700	3600	1800
Capacity Analysis Module:												
Vol/Sat:	0.00	0.11	0.11	0.00	0.02	0.05	0.13	0.34	0.02	0.01	0.17	0.31
Crit Moves:		****		****			****					****
Green/Cycle:	0.22	0.22	0.22	0.22	0.22	0.22	0.15	0.41	0.41	0.09	0.36	0.36
Volume/Cap:	0.40	0.51	0.51	0.50	0.10	0.22	0.86	0.82	0.05	0.14	0.48	0.86
Delay/Veh:	44.5	46.0	46.0	45.9	41.0	42.3	77.6	37.5	22.8	54.5	32.7	49.6
User DelAdj:	1.00	1.00	1.00	1.00	1.00	1.00	1.00	1.00	1.00	1.00	1.00	1.00
AdjDel/Veh:	44.5	46.0	46.0	45.9	41.0	42.3	77.6	37.5	22.8	54.5	32.7	49.6
LOS by Move:	D	D	D	D	D	D	E	D	C	D	C	D
HCM2kAvgQ:	5	7	7	7	1	3	12	23	1	1	10	23

Note: Queue reported is the number of cars per lane.

LLUH Campus Transformation Project
Year 2013 Without Project
Evening Peak Hour

Level Of Service Computation Report
2000 HCM Operations Method (Base Volume Alternative)

****

Intersection #5 Campus Street (NS) at Barton Road (EW)

****

Cycle (sec): 130 Critical Vol./Cap.(X): 0.924
Loss Time (sec): 8 (Y+R=3.0 sec) Average Delay (sec/veh): 45.0
Optimal Cycle: OPTIMIZED Level Of Service: D

****

Approach:	North Bound			South Bound			East Bound			West Bound		
Movement:	L - T - R			L - T - R			L - T - R			L - T - R		
Control:	Prot+Permit			Prot+Permit			Protected			Protected		
Rights:	Include			Include			Include			Include		
Min. Green:	28	28	28	28	28	28	10	18	18	10	21	21
Lanes:	1 0 0	1 0		1 0 1	0 1		1 0 2	0 1		1 0 2	0 1	
Volume Module:												
Base Vol:	75	31	15	360	79	122	57	614	51	30	1101	162
Growth Adj:	1.00	1.00	1.00	1.00	1.00	1.00	1.00	1.00	1.00	1.00	1.00	1.00
Initial Bse:	75	31	15	360	79	122	57	614	51	30	1101	162
User Adj:	1.00	1.00	1.00	1.00	1.00	1.00	1.00	1.00	1.00	1.00	1.00	1.00
PHF Adj:	0.70	0.70	0.70	0.86	0.86	0.86	0.89	0.89	0.89	0.93	0.93	0.93
PHF Volume:	108	44	22	416	91	141	64	689	57	32	1186	175
Reduct Vol:	0	0	0	0	0	0	0	0	0	0	0	0
Reduced Vol:	108	44	22	416	91	141	64	689	57	32	1186	175
PCE Adj:	1.00	1.00	1.00	1.00	1.00	1.00	1.00	1.00	1.00	1.00	1.00	1.00
MLF Adj:	1.00	1.00	1.00	1.00	1.00	1.00	1.00	1.00	1.00	1.00	1.00	1.00
FinalVolume:	108	44	22	416	91	141	64	689	57	32	1186	175
Saturation Flow Module:												
Sat/Lane:	1800	1800	1800	1800	1800	1800	1800	1800	1800	1800	1800	1800
Adjustment:	0.94	1.00	1.00	0.94	1.00	1.00	0.94	1.00	1.00	0.94	1.00	1.00
Lanes:	1.00	0.67	0.33	1.00	1.00	1.00	1.00	2.00	1.00	1.00	2.00	1.00
Final Sat.:	1700	1213	587	1700	1800	1800	1700	3600	1800	1700	3600	1800
Capacity Analysis Module:												
Vol/Sat:	0.00	0.04	0.04	0.00	0.05	0.08	0.04	0.19	0.03	0.02	0.33	0.10
Crit Moves:		****		****			****				****	
Green/Cycle:	0.25	0.22	0.22	0.28	0.25	0.25	0.08	0.32	0.32	0.13	0.37	0.37
Volume/Cap:	0.26	0.17	0.17	0.89	0.21	0.32	0.49	0.60	0.10	0.15	0.89	0.26
Delay/Veh:	39.8	41.7	41.7	63.7	39.2	40.6	60.4	38.1	31.2	50.7	46.1	28.7
User DelAdj:	1.00	1.00	1.00	1.00	1.00	1.00	1.00	1.00	1.00	1.00	1.00	1.00
AdjDel/Veh:	39.8	41.7	41.7	63.7	39.2	40.6	60.4	38.1	31.2	50.7	46.1	28.7
LOS by Move:	D	D	D	E	D	D	E	D	C	D	D	C
HCM2kAvgQ:	4	2	2	20	3	5	3	12	2	1	25	5

****

Note: Queue reported is the number of cars per lane.

****

LLUH Campus Transformation Project
Year 2013 Without Project
Morning Peak Hour

Level Of Service Computation Report
2000 HCM Unsignalized Method (Base Volume Alternative)

****

Intersection #6 Parkland Street (NS) at Stewart Street (EW)

****

Average Delay (sec/veh): 1.0 Worst Case Level Of Service: B[10.8]

****

Approach:	North Bound			South Bound			East Bound			West Bound		
Movement:	L - T - R			L - T - R			L - T - R			L - T - R		
Control:	Stop Sign			Stop Sign			Uncontrolled			Uncontrolled		
Rights:	Include			Include			Include			Include		
Lanes:	0 0 0 0 0			0 0 1! 0 0			0 1 0 0 0			0 0 0 1 0		
Volume Module:												
Base Vol:	0	0	0	6	0	16	33	264	0	0	196	11
Growth Adj:	1.00	1.00	1.00	1.00	1.00	1.00	1.00	1.00	1.00	1.00	1.00	1.00
Initial Bse:	0	0	0	6	0	16	33	264	0	0	196	11
User Adj:	1.00	1.00	1.00	1.00	1.00	1.00	1.00	1.00	1.00	1.00	1.00	1.00
PHF Adj:	1.00	1.00	1.00	0.79	0.79	0.79	0.80	0.80	0.80	0.85	0.85	0.85
PHF Volume:	0	0	0	8	0	20	41	330	0	0	231	13
Reduct Vol:	0	0	0	0	0	0	0	0	0	0	0	0
FinalVolume:	0	0	0	8	0	20	41	330	0	0	231	13
Critical Gap Module:												
Critical Gp:	xxxxx	xxxx	xxxxx	6.4	6.5	6.2	4.1	xxxx	xxxxx	xxxxx	xxxx	xxxxx
FollowUpTim:	xxxxx	xxxx	xxxxx	3.5	4.0	3.3	2.2	xxxx	xxxxx	xxxxx	xxxx	xxxxx
Capacity Module:												
Cnflict Vol:	xxxx	xxxx	xxxxx	651	651	238	244	xxxx	xxxxx	xxxx	xxxx	xxxxx
Potent Cap.:	xxxx	xxxx	xxxxx	437	391	806	1334	xxxx	xxxxx	xxxx	xxxx	xxxxx
Move Cap.:	xxxx	xxxx	xxxxx	426	378	806	1334	xxxx	xxxxx	xxxx	xxxx	xxxxx
Volume/Cap:	xxxx	xxxx	xxxx	0.02	0.00	0.03	0.03	xxxx	xxxx	xxxx	xxxx	xxxx
Level Of Service Module:												
2Way95thQ:	xxxx	xxxx	xxxxx	xxxx	xxxx	xxxxx	0.1	xxxx	xxxxx	xxxx	xxxx	xxxxx
Control Del:	xxxxx	xxxx	xxxxx	xxxxx	xxxx	xxxxx	7.8	xxxx	xxxxx	xxxxx	xxxx	xxxxx
LOS by Move:	*	*	*	*	*	*	A	*	*	*	*	*
Movement:	LT - LTR - RT			LT - LTR - RT			LT - LTR - RT			LT - LTR - RT		
Shared Cap.:	xxxx	xxxx	xxxxx	xxxx	648	xxxxx	xxxx	xxxx	xxxxx	xxxx	xxxx	xxxxx
SharedQueue:	xxxxx	xxxx	xxxxx	xxxxx	0.1	xxxxx	0.1	xxxx	xxxxx	xxxxx	xxxx	xxxxx
Shrd ConDel:	xxxxx	xxxx	xxxxx	xxxxx	10.8	xxxxx	7.8	xxxx	xxxxx	xxxxx	xxxx	xxxxx
Shared LOS:	*	*	*	*	B	*	A	*	*	*	*	*
ApproachDel:	xxxxxx			10.8			xxxxxx			xxxxxx		
ApproachLOS:	*			B			*			*		

****

Note: Queue reported is the number of cars per lane.

****

LLUH Campus Transformation Project
Year 2013 Without Project
Evening Peak Hour

Level Of Service Computation Report
2000 HCM Unsignalized Method (Base Volume Alternative)

Intersection #6 Parkland Street (NS) at Stewart Street (EW)

Average Delay (sec/veh): 0.8 Worst Case Level Of Service: B[12.3]

Approach:	North Bound			South Bound			East Bound			West Bound		
Movement:	L -	T -	R	L -	T -	R	L -	T -	R	L -	T -	R
Control:	Stop Sign			Stop Sign			Uncontrolled			Uncontrolled		
Rights:	Include			Include			Include			Include		
Lanes:	0 0	0 0	0	0 0	1! 0	0	0 1	0 0	0	0 0	0 1	0
Volume Module:												
Base Vol:	0	0	0	12	0	18	13	258	0	0	292	10
Growth Adj:	1.00	1.00	1.00	1.00	1.00	1.00	1.00	1.00	1.00	1.00	1.00	1.00
Initial Bse:	0	0	0	12	0	18	13	258	0	0	292	10
User Adj:	1.00	1.00	1.00	1.00	1.00	1.00	1.00	1.00	1.00	1.00	1.00	1.00
PHF Adj:	1.00	1.00	1.00	0.84	0.84	0.84	0.81	0.81	0.81	0.81	0.81	0.81
PHF Volume:	0	0	0	14	0	21	16	317	0	0	362	12
Reduct Vol:	0	0	0	0	0	0	0	0	0	0	0	0
FinalVolume:	0	0	0	14	0	21	16	317	0	0	362	12
Critical Gap Module:												
Critical Gp:	xxxxx	xxxx	xxxxx	6.4	6.5	6.2	4.1	xxxx	xxxxx	xxxxx	xxxx	xxxxx
FollowUpTim:	xxxxx	xxxx	xxxxx	3.5	4.0	3.3	2.2	xxxx	xxxxx	xxxxx	xxxx	xxxxx
Capacity Module:												
Cnflict Vol:	xxxx	xxxx	xxxxx	717	717	369	375	xxxx	xxxxx	xxxx	xxxx	xxxxx
Potent Cap.:	xxxx	xxxx	xxxxx	399	358	681	1195	xxxx	xxxxx	xxxx	xxxx	xxxxx
Move Cap.:	xxxx	xxxx	xxxxx	395	353	681	1195	xxxx	xxxxx	xxxx	xxxx	xxxxx
Volume/Cap:	xxxx	xxxx	xxxx	0.04	0.00	0.03	0.01	xxxx	xxxx	xxxx	xxxx	xxxx
Level Of Service Module:												
2Way95thQ:	xxxx	xxxx	xxxxx	xxxx	xxxx	xxxxx	0.0	xxxx	xxxxx	xxxx	xxxx	xxxxx
Control Del:	xxxxx	xxxx	xxxxx	xxxxx	xxxx	xxxxx	8.1	xxxx	xxxxx	xxxxx	xxxx	xxxxx
LOS by Move:	*	*	*	*	*	*	A	*	*	*	*	*
Movement:	LT -	LTR -	RT	LT -	LTR -	RT	LT -	LTR -	RT	LT -	LTR -	RT
Shared Cap.:	xxxx	xxxx	xxxxx	xxxx	528	xxxxx	xxxx	xxxx	xxxxx	xxxx	xxxx	xxxxx
SharedQueue:	xxxxx	xxxx	xxxxx	xxxxx	0.2	xxxxx	0.0	xxxx	xxxxx	xxxxx	xxxx	xxxxx
Shrd ConDel:	xxxxx	xxxx	xxxxx	xxxxx	12.3	xxxxx	8.1	xxxx	xxxxx	xxxxx	xxxx	xxxxx
Shared LOS:	*	*	*	*	B	*	A	*	*	*	*	*
ApproachDel:	xxxxxx			12.3			xxxxxx			xxxxxx		
ApproachLOS:	*			B			*			*		

Note: Queue reported is the number of cars per lane.

LLUH Campus Transformation Project
Year 2013 Without Project
Morning Peak Hour

Level Of Service Computation Report
2000 HCM Operations Method (Base Volume Alternative)

****

Intersection #7 Anderson Street (NS) at Stewart Street (EW)

****

Cycle (sec): 85 Critical Vol./Cap.(X): 0.570
Loss Time (sec): 6 (Y+R=3.0 sec) Average Delay (sec/veh): 20.8
Optimal Cycle: OPTIMIZED Level Of Service: C

****

Approach:	North Bound			South Bound			East Bound			West Bound		
Movement:	L - T - R			L - T - R			L - T - R			L - T - R		
Control:	Protected			Protected			Permitted			Permitted		
Rights:	Include			Include			Include			Include		
Min. Green:	10	18	18	10	18	18	28	28	28	28	28	28
Lanes:	1 0 2 0 1			1 0 2 0 1			1 0 0 1 0			1 0 0 1 0		
Volume Module:												
Base Vol:	50	296	36	261	683	542	202	73	42	24	68	149
Growth Adj:	1.00	1.00	1.00	1.00	1.00	1.00	1.00	1.00	1.00	1.00	1.00	1.00
Initial Bse:	50	296	36	261	683	542	202	73	42	24	68	149
User Adj:	1.00	1.00	1.00	1.00	1.00	1.00	1.00	1.00	1.00	1.00	1.00	1.00
PHF Adj:	0.77	0.77	0.77	0.86	0.86	0.86	0.93	0.93	0.93	0.85	0.85	0.85
PHF Volume:	65	386	47	303	794	630	218	79	45	28	80	174
Reduct Vol:	0	0	0	0	0	0	0	0	0	0	0	0
Reduced Vol:	65	386	47	303	794	630	218	79	45	28	80	174
PCE Adj:	1.00	1.00	1.00	1.00	1.00	1.00	1.00	1.00	1.00	1.00	1.00	1.00
MLF Adj:	1.00	1.00	1.00	1.00	1.00	1.00	1.00	1.00	1.00	1.00	1.00	1.00
FinalVolume:	65	386	47	303	794	630	218	79	45	28	80	174
Saturation Flow Module:												
Sat/Lane:	1800	1800	1800	1800	1800	1800	1800	1800	1800	1800	1800	1800
Adjustment:	0.94	1.00	1.00	0.94	1.00	1.00	0.94	1.00	1.00	0.94	1.00	1.00
Lanes:	1.00	2.00	1.00	1.00	2.00	1.00	1.00	0.63	0.37	1.00	0.31	0.69
Final Sat.:	1700	3600	1800	1700	3600	1800	1700	1143	657	1700	564	1236
Capacity Analysis Module:												
Vol/Sat:	0.04	0.11	0.03	0.18	0.22	0.35	0.13	0.07	0.07	0.02	0.14	0.14
Crit Moves:	****					****					****	
Green/Cycle:	0.12	0.33	0.33	0.27	0.48	0.48	0.33	0.33	0.33	0.33	0.33	0.33
Volume/Cap:	0.33	0.33	0.08	0.65	0.46	0.73	0.39	0.21	0.21	0.05	0.43	0.43
Delay/Veh:	35.4	21.8	19.9	30.5	14.8	20.6	22.4	20.7	20.7	19.5	22.8	22.8
User DelAdj:	1.00	1.00	1.00	1.00	1.00	1.00	1.00	1.00	1.00	1.00	1.00	1.00
AdjDel/Veh:	35.4	21.8	19.9	30.5	14.8	20.6	22.4	20.7	20.7	19.5	22.8	22.8
LOS by Move:	D	C	B	C	B	C	C	C	C	B	C	C
HCM2kAvgQ:	2	4	1	8	7	14	5	2	2	1	5	5

****

Note: Queue reported is the number of cars per lane.

****

LLUH Campus Transformation Project
Year 2013 Without Project
Evening Peak Hour

Level Of Service Computation Report
2000 HCM Operations Method (Base Volume Alternative)

Intersection #7 Anderson Street (NS) at Stewart Street (EW)

Cycle (sec): 60 Critical Vol./Cap.(X): 0.543
Loss Time (sec): 6 (Y+R=3.0 sec) Average Delay (sec/veh): 16.6
Optimal Cycle: OPTIMIZED Level Of Service: B

Approach:	North Bound			South Bound			East Bound			West Bound		
Movement:	L - T - R			L - T - R			L - T - R			L - T - R		
Control:	Protected			Protected			Permitted			Permitted		
Rights:	Include			Include			Include			Include		
Min. Green:	10	18	18	10	18	18	28	28	28	28	28	28
Lanes:	1 0 2 0 1			1 0 2 0 1			1 0 0 1 0			1 0 0 1 0		
Volume Module:												
Base Vol:	36	565	18	146	402	240	210	126	64	25	90	305
Growth Adj:	1.00	1.00	1.00	1.00	1.00	1.00	1.00	1.00	1.00	1.00	1.00	1.00
Initial Bse:	36	565	18	146	402	240	210	126	64	25	90	305
User Adj:	1.00	1.00	1.00	1.00	1.00	1.00	1.00	1.00	1.00	1.00	1.00	1.00
PHF Adj:	0.96	0.96	0.96	0.97	0.97	0.97	0.90	0.90	0.90	0.92	0.92	0.92
PHF Volume:	38	590	19	151	415	248	233	140	71	27	98	331
Reduct Vol:	0	0	0	0	0	0	0	0	0	0	0	0
Reduced Vol:	38	590	19	151	415	248	233	140	71	27	98	331
PCE Adj:	1.00	1.00	1.00	1.00	1.00	1.00	1.00	1.00	1.00	1.00	1.00	1.00
MLF Adj:	1.00	1.00	1.00	1.00	1.00	1.00	1.00	1.00	1.00	1.00	1.00	1.00
FinalVolume:	38	590	19	151	415	248	233	140	71	27	98	331
Saturation Flow Module:												
Sat/Lane:	1800	1800	1800	1800	1800	1800	1800	1800	1800	1800	1800	1800
Adjustment:	0.94	1.00	1.00	0.94	1.00	1.00	0.94	1.00	1.00	0.94	1.00	1.00
Lanes:	1.00	2.00	1.00	1.00	2.00	1.00	1.00	0.66	0.34	1.00	0.23	0.77
Final Sat.:	1700	3600	1800	1700	3600	1800	1700	1194	606	1700	410	1390
Capacity Analysis Module:												
Vol/Sat:	0.02	0.16	0.01	0.09	0.12	0.14	0.14	0.12	0.12	0.02	0.24	0.24
Crit Moves:		****		****							****	
Green/Cycle:	0.16	0.29	0.29	0.16	0.29	0.29	0.45	0.45	0.45	0.45	0.45	0.45
Volume/Cap:	0.14	0.56	0.04	0.55	0.40	0.47	0.30	0.26	0.26	0.04	0.53	0.53
Delay/Veh:	22.5	19.4	15.8	26.3	17.9	18.8	11.0	10.7	10.7	9.5	12.9	12.9
User DelAdj:	1.00	1.00	1.00	1.00	1.00	1.00	1.00	1.00	1.00	1.00	1.00	1.00
AdjDel/Veh:	22.5	19.4	15.8	26.3	17.9	18.8	11.0	10.7	10.7	9.5	12.9	12.9
LOS by Move:	C	B	B	C	B	B	B	B	B	A	B	B
HCM2kAvgQ:	1	6	0	4	4	4	3	3	3	0	6	6

Note: Queue reported is the number of cars per lane.

LLUH Campus Transformation Project
Year 2013 Without Project
Morning Peak Hour

Level Of Service Computation Report
2000 HCM Operations Method (Base Volume Alternative)

****

Intersection #8 Anderson Street (NS) at University Avenue (EW)

****

Cycle (sec): 130 Critical Vol./Cap.(X): 0.289
Loss Time (sec): 4 (Y+R=3.0 sec) Average Delay (sec/veh): 6.6
Optimal Cycle: OPTIMIZED Level Of Service: A

****

Approach:	North Bound			South Bound			East Bound			West Bound		
Movement:	L - T - R			L - T - R			L - T - R			L - T - R		
Control:	Permitted			Permitted			Permitted			Permitted		
Rights:	Include			Include			Include			Include		
Min. Green:	18	18	18	18	18	18	28	28	28	0	0	0
Lanes:	1 0 2	0 0		0 0 2	0 1		1 0 0	0 1		0 0 0	0 0	
Volume Module:												
Base Vol:	71	347	0	0	643	126	33	0	27	0	0	0
Growth Adj:	1.00	1.00	1.00	1.00	1.00	1.00	1.00	1.00	1.00	1.00	1.00	1.00
Initial Bse:	71	347	0	0	643	126	33	0	27	0	0	0
User Adj:	1.00	1.00	1.00	1.00	1.00	1.00	1.00	1.00	1.00	1.00	1.00	1.00
PHF Adj:	0.81	0.81	0.81	0.70	0.70	0.70	0.79	0.79	0.79	1.00	1.00	1.00
PHF Volume:	88	431	0	0	921	181	42	0	34	0	0	0
Reduct Vol:	0	0	0	0	0	0	0	0	0	0	0	0
Reduced Vol:	88	431	0	0	921	181	42	0	34	0	0	0
PCE Adj:	1.00	1.00	1.00	1.00	1.00	1.00	1.00	1.00	1.00	1.00	1.00	1.00
MLF Adj:	1.00	1.00	1.00	1.00	1.00	1.00	1.00	1.00	1.00	1.00	1.00	1.00
FinalVolume:	88	431	0	0	921	181	42	0	34	0	0	0
Saturation Flow Module:												
Sat/Lane:	1800	1800	1800	1800	1800	1800	1800	1800	1800	1800	1800	1800
Adjustment:	0.94	1.00	1.00	0.94	1.00	1.00	0.94	1.00	1.00	0.94	1.00	1.00
Lanes:	1.00	2.00	0.00	0.00	2.00	1.00	1.00	0.00	1.00	0.00	0.00	0.00
Final Sat.:	1700	3600	0	0	3600	1800	1700	0	1800	0	0	0
Capacity Analysis Module:												
Vol/Sat:	0.05	0.12	0.00	0.00	0.26	0.10	0.02	0.00	0.02	0.00	0.00	0.00
Crit Moves:					****		****					
Green/Cycle:	0.75	0.75	0.00	0.00	0.75	0.75	0.22	0.00	0.22	0.00	0.00	0.00
Volume/Cap:	0.07	0.16	0.00	0.00	0.34	0.13	0.11	0.00	0.09	0.00	0.00	0.00
Delay/Veh:	4.2	4.5	0.0	0.0	5.4	4.4	41.2	0.0	40.9	0.0	0.0	0.0
User DelAdj:	1.00	1.00	1.00	1.00	1.00	1.00	1.00	1.00	1.00	1.00	1.00	1.00
AdjDel/Veh:	4.2	4.5	0.0	0.0	5.4	4.4	41.2	0.0	40.9	0.0	0.0	0.0
LOS by Move:	A	A	A	A	A	A	D	A	D	A	A	A
HCM2kAvgQ:	1	2	0	0	6	2	1	0	1	0	0	0

****

Note: Queue reported is the number of cars per lane.

****

LLUH Campus Transformation Project
Year 2013 Without Project
Evening Peak Hour

Level Of Service Computation Report
2000 HCM Operations Method (Base Volume Alternative)

Intersection #8 Anderson Street (NS) at University Avenue (EW)

Cycle (sec): 120 Critical Vol./Cap.(X): 0.244
Loss Time (sec): 4 (Y+R=3.0 sec) Average Delay (sec/veh): 7.7
Optimal Cycle: OPTIMIZED Level Of Service: A

Approach:	North Bound			South Bound			East Bound			West Bound		
Movement:	L - T - R			L - T - R			L - T - R			L - T - R		
Control:	Permitted			Permitted			Permitted			Permitted		
Rights:	Include			Include			Include			Include		
Min. Green:	18	18	18	18	18	18	28	28	28	0	0	0
Lanes:	1 0 2	0 0		0 0 2	0 1		1 0 0	0 1		0 0 0	0 0	
Volume Module:												
Base Vol:	60	602	0	0	448	55	58	0	32	0	0	0
Growth Adj:	1.00	1.00	1.00	1.00	1.00	1.00	1.00	1.00	1.00	1.00	1.00	1.00
Initial Bse:	60	602	0	0	448	55	58	0	32	0	0	0
User Adj:	1.00	1.00	1.00	1.00	1.00	1.00	1.00	1.00	1.00	1.00	1.00	1.00
PHF Adj:	0.88	0.88	0.88	0.84	0.84	0.84	0.74	0.74	0.74	1.00	1.00	1.00
PHF Volume:	68	684	0	0	532	65	78	0	43	0	0	0
Reduct Vol:	0	0	0	0	0	0	0	0	0	0	0	0
Reduced Vol:	68	684	0	0	532	65	78	0	43	0	0	0
PCE Adj:	1.00	1.00	1.00	1.00	1.00	1.00	1.00	1.00	1.00	1.00	1.00	1.00
MLF Adj:	1.00	1.00	1.00	1.00	1.00	1.00	1.00	1.00	1.00	1.00	1.00	1.00
FinalVolume:	68	684	0	0	532	65	78	0	43	0	0	0
Saturation Flow Module:												
Sat/Lane:	1800	1800	1800	1800	1800	1800	1800	1800	1800	1800	1800	1800
Adjustment:	0.94	1.00	1.00	0.94	1.00	1.00	0.94	1.00	1.00	0.94	1.00	1.00
Lanes:	1.00	2.00	0.00	0.00	2.00	1.00	1.00	0.00	1.00	0.00	0.00	0.00
Final Sat.:	1700	3600	0	0	3600	1800	1700	0	1800	0	0	0
Capacity Analysis Module:												
Vol/Sat:	0.04	0.19	0.00	0.00	0.15	0.04	0.05	0.00	0.02	0.00	0.00	0.00
Crit Moves:		****					****					
Green/Cycle:	0.73	0.73	0.00	0.00	0.73	0.73	0.23	0.00	0.23	0.00	0.00	0.00
Volume/Cap:	0.05	0.26	0.00	0.00	0.20	0.05	0.20	0.00	0.10	0.00	0.00	0.00
Delay/Veh:	4.5	5.3	0.0	0.0	5.0	4.4	37.2	0.0	36.2	0.0	0.0	0.0
User DelAdj:	1.00	1.00	1.00	1.00	1.00	1.00	1.00	1.00	1.00	1.00	1.00	1.00
AdjDel/Veh:	4.5	5.3	0.0	0.0	5.0	4.4	37.2	0.0	36.2	0.0	0.0	0.0
LOS by Move:	A	A	A	A	A	A	D	A	D	A	A	A
HCM2kAvgQ:	1	4	0	0	3	1	2	0	1	0	0	0

Note: Queue reported is the number of cars per lane.

LLUH Campus Transformation Project
Year 2013 Without Project
Morning Peak Hour

Level Of Service Computation Report
2000 HCM 4-Way Stop Method (Base Volume Alternative)

****

Intersection #9 Anderson Street (NS) at Mound Street (EW)

****

Cycle (sec):	0	Critical Vol./Cap.(X):	0.485
Loss Time (sec):	0 (Y+R=4.0 sec)	Average Delay (sec/veh):	13.0
Optimal Cycle:	0	Level Of Service:	B

****

Approach:	North Bound			South Bound			East Bound			West Bound		
Movement:	L -	T -	R	L -	T -	R	L -	T -	R	L -	T -	R
Control:	Stop Sign			Stop Sign			Stop Sign			Stop Sign		
Rights:	Include			Include			Include			Include		
Min. Green:	0	0	0	0	0	0	0	0	0	0	0	0
Lanes:	1 1	0 0	1	0 0	1! 0	0	1 0	0 1	1	0 0	1! 0	0
Volume Module:												
Base Vol:	388	73	64	18	20	12	28	98	500	30	20	9
Growth Adj:	1.00	1.00	1.00	1.00	1.00	1.00	1.00	1.00	1.00	1.00	1.00	1.00
Initial Bse:	388	73	64	18	20	12	28	98	500	30	20	9
User Adj:	1.00	1.00	1.00	1.00	1.00	1.00	1.00	1.00	1.00	1.00	1.00	1.00
PHF Adj:	1.00	1.00	1.00	1.00	1.00	1.00	1.00	1.00	1.00	1.00	1.00	1.00
PHF Volume:	388	73	64	18	20	12	28	98	500	30	20	9
Reduct Vol:	0	0	0	0	0	0	0	0	0	0	0	0
Reduced Vol:	388	73	64	18	20	12	28	98	500	30	20	9
PCE Adj:	1.00	1.00	1.00	1.00	1.00	1.00	1.00	1.00	1.00	1.00	1.00	1.00
MLF Adj:	1.00	1.00	1.00	1.00	1.00	1.00	1.00	1.00	1.00	1.00	1.00	1.00
FinalVolume:	388	73	64	18	20	12	28	98	500	30	20	9
Saturation Flow Module:												
Adjustment:	1.00	1.00	1.00	1.00	1.00	1.00	1.00	1.00	1.00	1.00	1.00	1.00
Lanes:	1.68	0.32	1.00	0.36	0.40	0.24	1.00	0.33	1.67	0.51	0.34	0.15
Final Sat.:	885	169	627	183	203	122	526	202	1055	259	173	78
Capacity Analysis Module:												
Vol/Sat:	0.44	0.43	0.10	0.10	0.10	0.10	0.05	0.49	0.47	0.12	0.12	0.12
Crit Moves:	****					****		****		****		
Delay/Veh:	14.3	14.0	8.8	10.4	10.4	10.4	9.7	13.5	13.0	10.6	10.6	10.6
Delay Adj:	1.00	1.00	1.00	1.00	1.00	1.00	1.00	1.00	1.00	1.00	1.00	1.00
AdjDel/Veh:	14.3	14.0	8.8	10.4	10.4	10.4	9.7	13.5	13.0	10.6	10.6	10.6
LOS by Move:	B	B	A	B	B	B	A	B	B	B	B	B
ApproachDel:		13.6			10.4			12.9			10.6	
Delay Adj:		1.00			1.00			1.00			1.00	
ApprAdjDel:		13.6			10.4			12.9			10.6	
LOS by Appr:		B			B			B			B	
AllWayAvgQ:	0.7	0.7	0.1	0.1	0.1	0.1	0.1	0.9	0.9	0.1	0.1	0.1

****

Note: Queue reported is the number of cars per lane.

****

LLUH Campus Transformation Project
Year 2013 Without Project
Evening Peak Hour

Level Of Service Computation Report
2000 HCM 4-Way Stop Method (Base Volume Alternative)

****

Intersection #9 Anderson Street (NS) at Mound Street (EW)

****

Cycle (sec):	0	Critical Vol./Cap.(X):	0.587
Loss Time (sec):	0 (Y+R=4.0 sec)	Average Delay (sec/veh):	15.1
Optimal Cycle:	0	Level Of Service:	C

****

Approach:	North Bound			South Bound			East Bound			West Bound		
Movement:	L -	T -	R	L -	T -	R	L -	T -	R	L -	T -	R
Control:	Stop Sign			Stop Sign			Stop Sign			Stop Sign		
Rights:	Include			Include			Include			Include		
Min. Green:	0	0	0	0	0	0	0	0	0	0	0	0
Lanes:	1 1	0 0	1	0 0	1! 0	0	1 0	0 1	1	0 0	1! 0	0
Volume Module:												
Base Vol:	573	42	45	9	59	9	14	57	418	47	79	4
Growth Adj:	1.00	1.00	1.00	1.00	1.00	1.00	1.00	1.00	1.00	1.00	1.00	1.00
Initial Bse:	573	42	45	9	59	9	14	57	418	47	79	4
User Adj:	1.00	1.00	1.00	1.00	1.00	1.00	1.00	1.00	1.00	1.00	1.00	1.00
PHF Adj:	1.00	1.00	1.00	1.00	1.00	1.00	1.00	1.00	1.00	1.00	1.00	1.00
PHF Volume:	573	42	45	9	59	9	14	57	418	47	79	4
Reduct Vol:	0	0	0	0	0	0	0	0	0	0	0	0
Reduced Vol:	573	42	45	9	59	9	14	57	418	47	79	4
PCE Adj:	1.00	1.00	1.00	1.00	1.00	1.00	1.00	1.00	1.00	1.00	1.00	1.00
MLF Adj:	1.00	1.00	1.00	1.00	1.00	1.00	1.00	1.00	1.00	1.00	1.00	1.00
FinalVolume:	573	42	45	9	59	9	14	57	418	47	79	4
Saturation Flow Module:												
Adjustment:	1.00	1.00	1.00	1.00	1.00	1.00	1.00	1.00	1.00	1.00	1.00	1.00
Lanes:	1.86	0.14	1.00	0.12	0.76	0.12	1.00	0.24	1.76	0.36	0.61	0.03
Final Sat.:	976	72	626	56	370	56	484	136	1009	176	297	15
Capacity Analysis Module:												
Vol/Sat:	0.59	0.58	0.07	0.16	0.16	0.16	0.03	0.42	0.41	0.27	0.27	0.27
Crit Moves:	****			****				****		****		
Delay/Veh:	18.4	18.2	8.7	11.3	11.3	11.3	10.1	13.1	12.8	12.5	12.5	12.5
Delay Adj:	1.00	1.00	1.00	1.00	1.00	1.00	1.00	1.00	1.00	1.00	1.00	1.00
AdjDel/Veh:	18.4	18.2	8.7	11.3	11.3	11.3	10.1	13.1	12.8	12.5	12.5	12.5
LOS by Move:	C	C	A	B	B	B	B	B	B	B	B	B
ApproachDel:	17.7			11.3			12.8			12.5		
Delay Adj:	1.00			1.00			1.00			1.00		
ApprAdjDel:	17.7			11.3			12.8			12.5		
LOS by Appr:	C			B			B			B		
AllWayAvgQ:	1.3	1.3	0.1	0.2	0.2	0.2	0.0	0.7	0.7	0.3	0.3	0.3

****

Note: Queue reported is the number of cars per lane.

****

LLUH Campus Transformation Project
Year 2013 Without Project
Morning Peak Hour

Level Of Service Computation Report
2000 HCM Unsignalized Method (Base Volume Alternative)

Intersection #10 Anderson Street (NS) at Taylor Street (EW)

Average Delay (sec/veh): 0.8 Worst Case Level Of Service: A[9.4]

Approach:	North Bound			South Bound			East Bound			West Bound		
Movement:	L - T - R			L - T - R			L - T - R			L - T - R		
Control:	Uncontrolled			Uncontrolled			Stop Sign			Stop Sign		
Rights:	Include			Include			Include			Include		
Lanes:	1 0 2 0 0			0 0 1 1 0			0 0 0 0 0			0 0 0 0 0		
Volume Module:												
Base Vol:	94	510	0	0	530	43	0	0	0	0	0	0
Growth Adj:	1.00	1.00	1.00	1.00	1.00	1.00	1.00	1.00	1.00	1.00	1.00	1.00
Initial Bse:	94	510	0	0	530	43	0	0	0	0	0	0
User Adj:	1.00	1.00	1.00	1.00	1.00	1.00	1.00	1.00	1.00	1.00	1.00	1.00
PHF Adj:	0.77	0.77	0.77	0.87	0.87	0.87	0.25	0.25	0.25	1.00	1.00	1.00
PHF Volume:	122	664	0	0	610	49	0	0	0	0	0	0
Reduct Vol:	0	0	0	0	0	0	0	0	0	0	0	0
FinalVolume:	122	664	0	0	610	49	0	0	0	0	0	0
Critical Gap Module:												
Critical Gp:	4.1	xxxx	xxxxx	xxxxx	xxxx	xxxxx	xxxxx	xxxx	xxxxx	xxxxx	xxxx	xxxxx
FollowUpTim:	2.2	xxxx	xxxxx	xxxxx	xxxx	xxxxx	xxxxx	xxxx	xxxxx	xxxxx	xxxx	xxxxx
Capacity Module:												
Cnflict Vol:	659	xxxx	xxxxx	xxxx	xxxx	xxxxx	xxxx	xxxx	xxxxx	xxxx	xxxx	xxxxx
Potent Cap.:	938	xxxx	xxxxx	xxxx	xxxx	xxxxx	xxxx	xxxx	xxxxx	xxxx	xxxx	xxxxx
Move Cap.:	938	xxxx	xxxxx	xxxx	xxxx	xxxxx	xxxx	xxxx	xxxxx	xxxx	xxxx	xxxxx
Volume/Cap:	0.13	xxxx	xxxx	xxxx	xxxx	xxxx	xxxx	xxxx	xxxx	xxxx	xxxx	xxxx
Level Of Service Module:												
2Way95thQ:	0.4	xxxx	xxxxx	xxxx	xxxx	xxxxx	xxxx	xxxx	xxxxx	xxxx	xxxx	xxxxx
Control Del:	9.4	xxxx	xxxxx	xxxxx	xxxx	xxxxx	xxxxx	xxxx	xxxxx	xxxxx	xxxx	xxxxx
LOS by Move:	A	*	*	*	*	*	*	*	*	*	*	*
Movement:	LT - LTR - RT			LT - LTR - RT			LT - LTR - RT			LT - LTR - RT		
Shared Cap.:	xxxx	xxxx	xxxxx	xxxx	xxxx	xxxxx	xxxx	xxxx	xxxxx	xxxx	xxxx	xxxxx
SharedQueue:	xxxxx	xxxx	xxxxx	xxxxx	xxxx	xxxxx	xxxxx	xxxx	xxxxx	xxxxx	xxxx	xxxxx
Shrd ConDel:	xxxxx	xxxx	xxxxx	xxxxx	xxxx	xxxxx	xxxxx	xxxx	xxxxx	xxxxx	xxxx	xxxxx
Shared LOS:	*	*	*	*	*	*	*	*	*	*	*	*
ApproachDel:	xxxxxx			xxxxxx			xxxxxx			xxxxxx		
ApproachLOS:	*			*			*			*		

Note: Queue reported is the number of cars per lane.

LLUH Campus Transformation Project
Year 2013 Without Project
Evening Peak Hour

Level Of Service Computation Report
2000 HCM Unsignalized Method (Base Volume Alternative)

****

Intersection #10 Anderson Street (NS) at Taylor Street (EW)

****

Average Delay (sec/veh): 0.1 Worst Case Level Of Service: A[8.6]

****

Approach:	North Bound			South Bound			East Bound			West Bound		
Movement:	L - T - R			L - T - R			L - T - R			L - T - R		
Control:	Uncontrolled			Uncontrolled			Stop Sign			Stop Sign		
Rights:	Include			Include			Include			Include		
Lanes:	1 0 2 0 0			0 0 1 1 0			0 0 0 0 0			0 0 0 0 0		
Volume Module:												
Base Vol:	16	640	0	0	510	5	0	0	0	0	0	0
Growth Adj:	1.00	1.00	1.00	1.00	1.00	1.00	1.00	1.00	1.00	1.00	1.00	1.00
Initial Bse:	16	640	0	0	510	5	0	0	0	0	0	0
User Adj:	1.00	1.00	1.00	1.00	1.00	1.00	1.00	1.00	1.00	1.00	1.00	1.00
PHF Adj:	0.91	0.91	0.91	0.91	0.91	0.91	1.00	1.00	1.00	1.00	1.00	1.00
PHF Volume:	18	703	0	0	561	5	0	0	0	0	0	0
Reduct Vol:	0	0	0	0	0	0	0	0	0	0	0	0
FinalVolume:	18	703	0	0	561	5	0	0	0	0	0	0
Critical Gap Module:												
Critical Gp:	4.1	xxxx	xxxxx	xxxxx	xxxx	xxxxx	xxxxx	xxxx	xxxxx	xxxxx	xxxx	xxxxx
FollowUpTim:	2.2	xxxx	xxxxx	xxxxx	xxxx	xxxxx	xxxxx	xxxx	xxxxx	xxxxx	xxxx	xxxxx
Capacity Module:												
Cnflict Vol:	566	xxxx	xxxxx	xxxx	xxxx	xxxxx	xxxx	xxxx	xxxxx	xxxx	xxxx	xxxxx
Potent Cap.:	1016	xxxx	xxxxx	xxxx	xxxx	xxxxx	xxxx	xxxx	xxxxx	xxxx	xxxx	xxxxx
Move Cap.:	1016	xxxx	xxxxx	xxxx	xxxx	xxxxx	xxxx	xxxx	xxxxx	xxxx	xxxx	xxxxx
Volume/Cap:	0.02	xxxx	xxxx	xxxx	xxxx	xxxx	xxxx	xxxx	xxxx	xxxx	xxxx	xxxx
Level Of Service Module:												
2Way95thQ:	0.1	xxxx	xxxxx	xxxx	xxxx	xxxxx	xxxx	xxxx	xxxxx	xxxx	xxxx	xxxxx
Control Del:	8.6	xxxx	xxxxx	xxxxx	xxxx	xxxxx	xxxxx	xxxx	xxxxx	xxxxx	xxxx	xxxxx
LOS by Move:	A	*	*	*	*	*	*	*	*	*	*	*
Movement:	LT - LTR - RT			LT - LTR - RT			LT - LTR - RT			LT - LTR - RT		
Shared Cap.:	xxxx	xxxx	xxxxx	xxxx	xxxx	xxxxx	xxxx	xxxx	xxxxx	xxxx	xxxx	xxxxx
SharedQueue:	xxxxx	xxxx	xxxxx	xxxxx	xxxx	xxxxx	xxxxx	xxxx	xxxxx	xxxxx	xxxx	xxxxx
Shrd ConDel:	xxxxx	xxxx	xxxxx	xxxxx	xxxx	xxxxx	xxxxx	xxxx	xxxxx	xxxxx	xxxx	xxxxx
Shared LOS:	*	*	*	*	*	*	*	*	*	*	*	*
ApproachDel:	xxxxxx			xxxxxx			xxxxxx			xxxxxx		
ApproachLOS:	*			*			*			*		

****

Note: Queue reported is the number of cars per lane.

****

LLUH Campus Transformation Project
Year 2013 Without Project
Morning Peak Hour

Level Of Service Computation Report
2000 HCM 4-Way Stop Method (Base Volume Alternative)

Intersection #11 Anderson Street (NS) at Prospect Avenue (EW)

Cycle (sec):	0	Critical Vol./Cap.(X):	0.703
Loss Time (sec):	0 (Y+R=4.0 sec)	Average Delay (sec/veh):	17.9
Optimal Cycle:	0	Level Of Service:	C

Approach:	North Bound			South Bound			East Bound			West Bound		
Movement:	L -	T -	R	L -	T -	R	L -	T -	R	L -	T -	R
Control:	Stop Sign			Stop Sign			Stop Sign			Stop Sign		
Rights:	Include			Include			Include			Include		
Min. Green:	0	0	0	0	0	0	0	0	0	0	0	0
Lanes:	0 0	1 1	0	1 0	2 0	0	0 0	1! 0	0	0 0	1! 0	0
Volume Module:												
Base Vol:	0	486	80	107	418	0	56	23	58	41	0	98
Growth Adj:	1.00	1.00	1.00	1.00	1.00	1.00	1.00	1.00	1.00	1.00	1.00	1.00
Initial Bse:	0	486	80	107	418	0	56	23	58	41	0	98
User Adj:	1.00	1.00	1.00	1.00	1.00	1.00	1.00	1.00	1.00	1.00	1.00	1.00
PHF Adj:	0.74	0.74	0.74	0.88	0.88	0.88	0.70	0.70	0.70	0.84	0.84	0.84
PHF Volume:	0	659	108	122	476	0	79	33	82	49	0	116
Reduct Vol:	0	0	0	0	0	0	0	0	0	0	0	0
Reduced Vol:	0	659	108	122	476	0	79	33	82	49	0	116
PCE Adj:	1.00	1.00	1.00	1.00	1.00	1.00	1.00	1.00	1.00	1.00	1.00	1.00
MLF Adj:	1.00	1.00	1.00	1.00	1.00	1.00	1.00	1.00	1.00	1.00	1.00	1.00
FinalVolume:	0	659	108	122	476	0	79	33	82	49	0	116
Saturation Flow Module:												
Adjustment:	1.00	1.00	1.00	1.00	1.00	1.00	1.00	1.00	1.00	1.00	1.00	1.00
Lanes:	0.00	1.72	0.28	1.00	2.00	0.00	0.41	0.17	0.42	0.29	0.00	0.71
Final Sat.:	0	938	157	481	1035	0	202	83	209	146	0	349
Capacity Analysis Module:												
Vol/Sat:	xxxx	0.70	0.69	0.25	0.46	xxxx	0.39	0.39	0.39	0.33	xxxx	0.33
Crit Moves:		****			****			****		****		
Delay/Veh:	0.0	22.9	21.9	12.4	14.9	0.0	14.0	14.0	14.0	12.9	0.0	12.9
Delay Adj:	1.00	1.00	1.00	1.00	1.00	1.00	1.00	1.00	1.00	1.00	1.00	1.00
AdjDel/Veh:	0.0	22.9	21.9	12.4	14.9	0.0	14.0	14.0	14.0	12.9	0.0	12.9
LOS by Move:	*	C	C	B	B	*	B	B	B	B	*	B
ApproachDel:		22.7			14.4			14.0			12.9	
Delay Adj:		1.00			1.00			1.00			1.00	
ApprAdjDel:		22.7			14.4			14.0			12.9	
LOS by Appr:		C			B			B			B	
AllWayAvgQ:	0.0	2.1	2.0	0.3	0.8	0.0	0.6	0.6	0.6	0.4	0.4	0.4

Note: Queue reported is the number of cars per lane.

LLUH Campus Transformation Project
Year 2013 Without Project
Evening Peak Hour

Level Of Service Computation Report
2000 HCM 4-Way Stop Method (Base Volume Alternative)

Intersection #11 Anderson Street (NS) at Prospect Avenue (EW)

Cycle (sec):	0	Critical Vol./Cap.(X):	0.731
Loss Time (sec):	0 (Y+R=4.0 sec)	Average Delay (sec/veh):	21.7
Optimal Cycle:	0	Level Of Service:	C

Approach:	North Bound			South Bound			East Bound			West Bound		
Movement:	L	T	R	L	T	R	L	T	R	L	T	R
Control:	Stop Sign			Stop Sign			Stop Sign			Stop Sign		
Rights:	Include			Include			Include			Include		
Min. Green:	0	0	0	0	0	0	0	0	0	0	0	0
Lanes:	0 0	1 1	0	1 0	2 0	0	0 0	1! 0	0	0 0	1! 0	0
Volume Module:												
Base Vol:	0	453	87	63	467	0	98	40	137	112	0	128
Growth Adj:	1.00	1.00	1.00	1.00	1.00	1.00	1.00	1.00	1.00	1.00	1.00	1.00
Initial Bse:	0	453	87	63	467	0	98	40	137	112	0	128
User Adj:	1.00	1.00	1.00	1.00	1.00	1.00	1.00	1.00	1.00	1.00	1.00	1.00
PHF Adj:	0.97	0.97	0.97	0.86	0.86	0.86	0.80	0.80	0.80	0.88	0.88	0.88
PHF Volume:	0	466	90	73	543	0	123	50	172	128	0	146
Reduct Vol:	0	0	0	0	0	0	0	0	0	0	0	0
Reduced Vol:	0	466	90	73	543	0	123	50	172	128	0	146
PCE Adj:	1.00	1.00	1.00	1.00	1.00	1.00	1.00	1.00	1.00	1.00	1.00	1.00
MLF Adj:	1.00	1.00	1.00	1.00	1.00	1.00	1.00	1.00	1.00	1.00	1.00	1.00
FinalVolume:	0	466	90	73	543	0	123	50	172	128	0	146
Saturation Flow Module:												
Adjustment:	1.00	1.00	1.00	1.00	1.00	1.00	1.00	1.00	1.00	1.00	1.00	1.00
Lanes:	0.00	1.68	0.32	1.00	2.00	0.00	0.36	0.14	0.50	0.47	0.00	0.53
Final Sat.:	0	761	149	425	909	0	168	69	235	209	0	239
Capacity Analysis Module:												
Vol/Sat:	xxxx	0.61	0.60	0.17	0.60	xxxx	0.73	0.73	0.73	0.61	xxxx	0.61
Crit Moves:		****			****		****			****		
Delay/Veh:	0.0	21.4	20.7	12.6	20.9	0.0	26.4	26.4	26.4	20.7	0.0	20.7
Delay Adj:	1.00	1.00	1.00	1.00	1.00	1.00	1.00	1.00	1.00	1.00	1.00	1.00
AdjDel/Veh:	0.0	21.4	20.7	12.6	20.9	0.0	26.4	26.4	26.4	20.7	0.0	20.7
LOS by Move:	*	C	C	B	C	*	D	D	D	C	*	C
ApproachDel:		21.3			19.9			26.4			20.7	
Delay Adj:		1.00			1.00			1.00			1.00	
ApprAdjDel:		21.3			19.9			26.4			20.7	
LOS by Appr:		C			C			D			C	
AllWayAvgQ:	0.0	1.4	1.3	0.2	1.3	0.0	2.1	2.1	2.1	1.3	1.3	1.3

Note: Queue reported is the number of cars per lane.

LLUH Campus Transformation Project
Year 2013 Without Project
Morning Peak Hour

Level Of Service Computation Report
2000 HCM Unsignalized Method (Base Volume Alternative)

****

Intersection #12 Anderson Street (NS) at Main Project Access (EW)

****

Average Delay (sec/veh): 3.0 Worst Case Level Of Service: C[15.7]

****

Approach:	North Bound			South Bound			East Bound			West Bound		
Movement:	L - T - R			L - T - R			L - T - R			L - T - R		
Control:	Uncontrolled			Uncontrolled			Stop Sign			Stop Sign		
Rights:	Include			Include			Include			Include		
Lanes:	1 0 2 0 0			0 0 1 1 0			1 0 0 0 1			0 0 0 0 0		
Volume Module:												
Base Vol:	160	456	0	0	364	135	54	0	86	0	0	0
Growth Adj:	1.00	1.00	1.00	1.00	1.00	1.00	1.00	1.00	1.00	1.00	1.00	1.00
Initial Bse:	160	456	0	0	364	135	54	0	86	0	0	0
User Adj:	1.00	1.00	1.00	1.00	1.00	1.00	1.00	1.00	1.00	1.00	1.00	1.00
PHF Adj:	0.73	0.73	0.73	0.90	0.90	0.90	0.85	0.85	0.85	1.00	1.00	1.00
PHF Volume:	219	623	0	0	405	150	63	0	101	0	0	0
Reduct Vol:	0	0	0	0	0	0	0	0	0	0	0	0
FinalVolume:	219	623	0	0	405	150	63	0	101	0	0	0
Critical Gap Module:												
Critical Gp:	4.1	xxxx	xxxxx	xxxxx	xxxx	xxxxx	6.8	xxxx	6.9	xxxxx	xxxx	xxxxx
FollowUpTim:	2.2	xxxx	xxxxx	xxxxx	xxxx	xxxxx	3.5	xxxx	3.3	xxxxx	xxxx	xxxxx
Capacity Module:												
Cnflict Vol:	555	xxxx	xxxxx	xxxx	xxxx	xxxxx	1229	xxxx	277	xxxx	xxxx	xxxxx
Potent Cap.:	1026	xxxx	xxxxx	xxxx	xxxx	xxxxx	173	xxxx	726	xxxx	xxxx	xxxxx
Move Cap.:	1026	xxxx	xxxxx	xxxx	xxxx	xxxxx	145	xxxx	726	xxxx	xxxx	xxxxx
Total Cap:	xxxx	xxxx	xxxxx	xxxx	xxxx	xxxxx	257	186	xxxxx	155	158	xxxxx
Volume/Cap:	0.21	xxxx	xxxx	xxxx	xxxx	xxxx	0.25	xxxx	0.14	xxxx	xxxx	xxxx
Level Of Service Module:												
2Way95thQ:	0.8	xxxx	xxxxx	xxxx	xxxx	xxxxx	0.9	xxxx	0.5	xxxx	xxxx	xxxxx
Control Del:	9.5	xxxx	xxxxx	xxxxx	xxxx	xxxxx	23.6	xxxx	10.8	xxxxx	xxxx	xxxxx
LOS by Move:	A	*	*	*	*	*	C	*	B	*	*	*
Movement:	LT - LTR - RT			LT - LTR - RT			LT - LTR - RT			LT - LTR - RT		
Shared Cap.:	xxxx	xxxx	xxxxx	xxxx	xxxx	xxxxx	xxxx	xxxx	xxxxx	xxxx	xxxx	xxxxx
SharedQueue:	xxxxx	xxxx	xxxxx	xxxxx	xxxx	xxxxx	xxxxx	xxxx	xxxxx	xxxxx	xxxx	xxxxx
Shrd ConDel:	xxxxx	xxxx	xxxxx	xxxxx	xxxx	xxxxx	xxxxx	xxxx	xxxxx	xxxxx	xxxx	xxxxx
Shared LOS:	*	*	*	*	*	*	*	*	*	*	*	*
ApproachDel:	xxxxxx			xxxxxx			15.7			xxxxxx		
ApproachLOS:	*			*			C			*		

****

Note: Queue reported is the number of cars per lane.

****

LLUH Campus Transformation Project
Year 2013 Without Project
Evening Peak Hour

Level Of Service Computation Report
2000 HCM Unsignalized Method (Base Volume Alternative)

Intersection #12 Anderson Street (NS) at Main Project Access (EW)

Average Delay (sec/veh): 4.3 Worst Case Level Of Service: C[19.2]

Approach:	North Bound					South Bound					East Bound					West Bound				
Movement:	L	-	T	-	R	L	-	T	-	R	L	-	T	-	R	L	-	T	-	R
Control:	Uncontrolled					Uncontrolled					Stop Sign					Stop Sign				
Rights:	Include					Include					Include					Include				
Lanes:	1	0	2	0	0	0	0	1	1	0	0	1	0	1	0	0	0	0	0	0
Volume Module:																				
Base Vol:	107	373		0		0	547		103		127		4		113	0		0		0
Growth Adj:	1.00	1.00		1.00		1.00	1.00		1.00		1.00		1.00		1.00	1.00		1.00		1.00
Initial Bse:	107	373		0		0	547		103		127		4		113	0		0		0
User Adj:	1.00	1.00		1.00		1.00	1.00		1.00		1.00		1.00		1.00	1.00		1.00		1.00
PHF Adj:	0.90	0.90		0.90		0.94	0.94		0.94		0.89		0.89		0.89	1.00		1.00		1.00
PHF Volume:	118	413		0		0	582		110		143		5		128	0		0		0
Reduct Vol:	0	0		0		0	0		0		0		0		0	0		0		0
FinalVolume:	118	413		0		0	582		110		143		5		128	0		0		0
Critical Gap Module:																				
Critical Gp:	4.1	xxxx	xxxxx	xxxxx		xxxx	xxxxx				6.8		6.5		6.9	xxxxx		xxxx		xxxxx
FollowUpTim:	2.2	xxxx	xxxxx	xxxxx		xxxx	xxxxx				3.5		4.0		3.3	xxxxx		xxxx		xxxxx
Capacity Module:																				
Cnflict Vol:	691	xxxx	xxxxx	xxxx		xxxx	xxxxx				1079		1286		346	xxxx		xxxx		xxxxx
Potent Cap.:	913	xxxx	xxxxx	xxxx		xxxx	xxxxx				216		166		656	xxxx		xxxx		xxxxx
Move Cap.:	913	xxxx	xxxxx	xxxx		xxxx	xxxxx				195		144		656	xxxx		xxxx		xxxxx
Total Cap:	xxxx	xxxx	xxxxx	xxxx		xxxx	xxxxx				324		266		xxxxx	255		227		xxxxx
Volume/Cap:	0.13	xxxx	xxxx	xxxx		xxxx	xxxx				0.44		0.02		0.19	xxxx		xxxx		xxxx
Level Of Service Module:																				
2Way95thQ:	0.4	xxxx	xxxxx	xxxx		xxxx	xxxxx				xxxx		xxxx		xxxxx	xxxx		xxxx		xxxxx
Control Del:	9.5	xxxx	xxxxx	xxxxx		xxxx	xxxxx				xxxxx		xxxx		xxxxx	xxxxx		xxxx		xxxxx
LOS by Move:	A	*		*		*	*		*		*		*		*	*		*		*
Movement:	LT	-	LTR	-	RT	LT	-	LTR	-	RT	LT	-	LTR	-	RT	LT	-	LTR	-	RT
Shared Cap.:	xxxx	xxxx	xxxxx	xxxx		xxxx	xxxxx				322		xxxx		625	xxxx		xxxx		xxxxx
SharedQueue:	xxxxx	xxxx	xxxxx	xxxxx		xxxx	xxxxx				2.3		xxxx		0.8	xxxxx		xxxx		xxxxx
Shrd ConDel:	xxxxx	xxxx	xxxxx	xxxxx		xxxx	xxxxx				25.3		xxxx		12.3	xxxxx		xxxx		xxxxx
Shared LOS:	*	*		*		*	*		*		D		*		B	*		*		*
ApproachDel:	xxxxxx			xxxxxx							19.2					xxxxxx				
ApproachLOS:	*			*							C					*				

Note: Queue reported is the number of cars per lane.

LLUH Campus Transformation Project
Year 2013 Without Project
Morning Peak Hour

Level Of Service Computation Report
2000 HCM Unsignalized Method (Base Volume Alternative)

Intersection #13 Anderson Street (NS) at Starr Street (EW)

Average Delay (sec/veh): 0.4 Worst Case Level Of Service: B[13.4]

Approach:	North Bound			South Bound			East Bound			West Bound		
Movement:	L - T - R			L - T - R			L - T - R			L - T - R		
Control:	Uncontrolled			Uncontrolled			Stop Sign			Stop Sign		
Rights:	Include			Include			Include			Include		
Lanes:	0 0 1 1 0			1 0 2 0 0			0 0 0 0 0			0 0 1! 0 0		
Volume Module:												
Base Vol:	0	627	15	5	457	0	0	0	0	3	0	17
Growth Adj:	1.00	1.00	1.00	1.00	1.00	1.00	1.00	1.00	1.00	1.00	1.00	1.00
Initial Bse:	0	627	15	5	457	0	0	0	0	3	0	17
User Adj:	1.00	1.00	1.00	1.00	1.00	1.00	1.00	1.00	1.00	1.00	1.00	1.00
PHF Adj:	0.77	0.77	0.77	0.91	0.91	0.91	1.00	1.00	1.00	0.54	0.54	0.54
PHF Volume:	0	818	20	5	502	0	0	0	0	6	0	32
Reduct Vol:	0	0	0	0	0	0	0	0	0	0	0	0
FinalVolume:	0	818	20	5	502	0	0	0	0	6	0	32
Critical Gap Module:												
Critical Gp:	xxxxx	xxxx	xxxxx	4.1	xxxx	xxxxx	xxxxx	xxxx	xxxxx	6.8	6.5	6.9
FollowUpTim:	xxxxx	xxxx	xxxxx	2.2	xxxx	xxxxx	xxxxx	xxxx	xxxxx	3.5	4.0	3.3
Capacity Module:												
Cnflict Vol:	xxxx	xxxx	xxxxx	838	xxxx	xxxxx	xxxx	xxxx	xxxxx	1090	1341	419
Potent Cap.:	xxxx	xxxx	xxxxx	805	xxxx	xxxxx	xxxx	xxxx	xxxxx	213	154	589
Move Cap.:	xxxx	xxxx	xxxxx	805	xxxx	xxxxx	xxxx	xxxx	xxxxx	212	153	589
Volume/Cap:	xxxx	xxxx	xxxx	0.01	xxxx	xxxx	xxxx	xxxx	xxxx	0.03	0.00	0.05
Level Of Service Module:												
2Way95thQ:	xxxx	xxxx	xxxxx	0.0	xxxx	xxxxx	xxxx	xxxx	xxxxx	xxxx	xxxx	xxxxx
Control Del:	xxxxx	xxxx	xxxxx	9.5	xxxx	xxxxx	xxxxx	xxxx	xxxxx	xxxxx	xxxx	xxxxx
LOS by Move:	*	*	*	A	*	*	*	*	*	*	*	*
Movement:	LT - LTR - RT			LT - LTR - RT			LT - LTR - RT			LT - LTR - RT		
Shared Cap.:	xxxx	xxxx	xxxxx	xxxx	xxxx	xxxxx	xxxx	xxxx	xxxxx	xxxx	465	xxxxx
SharedQueue:	xxxxx	xxxx	xxxxx	xxxxx	xxxx	xxxxx	xxxxx	xxxx	xxxxx	xxxxx	0.3	xxxxx
Shrd ConDel:	xxxxx	xxxx	xxxxx	xxxxx	xxxx	xxxxx	xxxxx	xxxx	xxxxx	xxxxx	13.4	xxxxx
Shared LOS:	*	*	*	*	*	*	*	*	*	*	B	*
ApproachDel:	xxxxxx			xxxxxx			xxxxxx			13.4		
ApproachLOS:	*			*			*			B		

Note: Queue reported is the number of cars per lane.

LLUH Campus Transformation Project
Year 2013 Without Project
Evening Peak Hour

Level Of Service Computation Report
2000 HCM Unsignalized Method (Base Volume Alternative)

Intersection #13 Anderson Street (NS) at Starr Street (EW)

Average Delay (sec/veh): 0.8 Worst Case Level Of Service: B[13.7]

Approach:	North Bound			South Bound			East Bound			West Bound		
Movement:	L - T - R			L - T - R			L - T - R			L - T - R		
Control:	Uncontrolled			Uncontrolled			Stop Sign			Stop Sign		
Rights:	Include			Include			Include			Include		
Lanes:	0 0 1 1 0			1 0 2 0 0			0 0 0 0 0			0 0 1! 0 0		
Volume Module:												
Base Vol:	0	473	9	16	627	0	0	0	0	14	0	27
Growth Adj:	1.00	1.00	1.00	1.00	1.00	1.00	1.00	1.00	1.00	1.00	1.00	1.00
Initial Bse:	0	473	9	16	627	0	0	0	0	14	0	27
User Adj:	1.00	1.00	1.00	1.00	1.00	1.00	1.00	1.00	1.00	1.00	1.00	1.00
PHF Adj:	0.91	0.91	0.91	0.92	0.92	0.92	1.00	1.00	1.00	0.67	0.67	0.67
PHF Volume:	0	519	10	17	678	0	0	0	0	21	0	40
Reduct Vol:	0	0	0	0	0	0	0	0	0	0	0	0
FinalVolume:	0	519	10	17	678	0	0	0	0	21	0	40
Critical Gap Module:												
Critical Gp:	xxxxx	xxxx	xxxxx	4.1	xxxx	xxxxx	xxxxx	xxxx	xxxxx	6.8	6.5	6.9
FollowUpTim:	xxxxx	xxxx	xxxxx	2.2	xxxx	xxxxx	xxxxx	xxxx	xxxxx	3.5	4.0	3.3
Capacity Module:												
Cnflict Vol:	xxxx	xxxx	xxxxx	529	xxxx	xxxxx	xxxx	xxxx	xxxxx	898	1237	264
Potent Cap.:	xxxx	xxxx	xxxxx	1049	xxxx	xxxxx	xxxx	xxxx	xxxxx	283	178	740
Move Cap.:	xxxx	xxxx	xxxxx	1049	xxxx	xxxxx	xxxx	xxxx	xxxxx	279	175	740
Volume/Cap:	xxxx	xxxx	xxxx	0.02	xxxx	xxxx	xxxx	xxxx	xxxx	0.08	0.00	0.05
Level Of Service Module:												
2Way95thQ:	xxxx	xxxx	xxxxx	0.1	xxxx	xxxxx	xxxx	xxxx	xxxxx	xxxx	xxxx	xxxxx
Control Del:	xxxxx	xxxx	xxxxx	8.5	xxxx	xxxxx	xxxxx	xxxx	xxxxx	xxxxx	xxxx	xxxxx
LOS by Move:	*	*	*	A	*	*	*	*	*	*	*	*
Movement:	LT - LTR - RT			LT - LTR - RT			LT - LTR - RT			LT - LTR - RT		
Shared Cap.:	xxxx	xxxx	xxxxx	xxxx	xxxx	xxxxx	xxxx	xxxx	xxxxx	xxxx	473	xxxxx
SharedQueue:	xxxxx	xxxx	xxxxx	xxxxx	xxxx	xxxxx	xxxxx	xxxx	xxxxx	xxxxx	0.4	xxxxx
Shrd ConDel:	xxxxx	xxxx	xxxxx	xxxxx	xxxx	xxxxx	xxxxx	xxxx	xxxxx	xxxxx	13.7	xxxxx
Shared LOS:	*	*	*	*	*	*	*	*	*	*	B	*
ApproachDel:	xxxxxx			xxxxxx			xxxxxx			13.7		
ApproachLOS:	*			*			*			B		

Note: Queue reported is the number of cars per lane.

LLUH Campus Transformation Project
Year 2013 Without Project
Morning Peak Hour

Level Of Service Computation Report
2000 HCM Operations Method (Base Volume Alternative)

****

Intersection #14 Anderson Street (NS) at Barton Road (EW)

****

Cycle (sec): 125 Critical Vol./Cap.(X): 0.883
Loss Time (sec): 8 (Y+R=3.0 sec) Average Delay (sec/veh): 41.6
Optimal Cycle: OPTIMIZED Level Of Service: D

****

Approach:	North Bound			South Bound			East Bound			West Bound		
Movement:	L - T - R			L - T - R			L - T - R			L - T - R		
Control:	Prot+Permit			Prot+Permit			Protected			Protected		
Rights:	Include			Include			Include			Include		
Min. Green:	28	28	28	28	28	28	10	21	21	10	28	28
Lanes:	1 0 0 1 0			1 0 1 0 1			2 0 2 0 1			1 0 2 0 1		
Volume Module:												
Base Vol:	83	143	34	150	174	116	256	796	118	147	691	181
Growth Adj:	1.00	1.00	1.00	1.00	1.00	1.00	1.00	1.00	1.00	1.00	1.00	1.00
Initial Bse:	83	143	34	150	174	116	256	796	118	147	691	181
User Adj:	1.00	1.00	1.00	1.00	1.00	1.00	1.00	1.00	1.00	1.00	1.00	1.00
PHF Adj:	0.74	0.74	0.74	0.91	0.91	0.91	0.82	0.82	0.82	0.80	0.80	0.80
PHF Volume:	113	194	46	164	191	127	313	973	144	185	868	227
Reduct Vol:	0	0	0	0	0	0	0	0	0	0	0	0
Reduced Vol:	113	194	46	164	191	127	313	973	144	185	868	227
PCE Adj:	1.00	1.00	1.00	1.00	1.00	1.00	1.00	1.00	1.00	1.00	1.00	1.00
MLF Adj:	1.00	1.00	1.00	1.00	1.00	1.00	1.00	1.00	1.00	1.00	1.00	1.00
FinalVolume:	113	194	46	164	191	127	313	973	144	185	868	227
Saturation Flow Module:												
Sat/Lane:	1800	1800	1800	1800	1800	1800	1800	1800	1800	1800	1800	1800
Adjustment:	0.94	1.00	1.00	0.94	1.00	1.00	0.89	1.00	1.00	0.94	1.00	1.00
Lanes:	1.00	0.81	0.19	1.00	1.00	1.00	2.00	2.00	1.00	1.00	2.00	1.00
Final Sat.:	1700	1454	346	1700	1800	1800	3200	3600	1800	1700	3600	1800
Capacity Analysis Module:												
Vol/Sat:	0.00	0.13	0.13	0.00	0.11	0.07	0.10	0.27	0.08	0.11	0.24	0.13
Crit Moves:		****		****				****		****		
Green/Cycle:	0.22	0.22	0.22	0.22	0.22	0.22	0.14	0.35	0.35	0.14	0.35	0.35
Volume/Cap:	0.30	0.60	0.60	0.43	0.47	0.32	0.69	0.78	0.23	0.78	0.69	0.36
Delay/Veh:	40.7	45.9	45.9	42.4	43.0	40.9	55.8	39.5	29.1	66.7	36.8	30.8
User DelAdj:	1.00	1.00	1.00	1.00	1.00	1.00	1.00	1.00	1.00	1.00	1.00	1.00
AdjDel/Veh:	40.7	45.9	45.9	42.4	43.0	40.9	55.8	39.5	29.1	66.7	36.8	30.8
LOS by Move:	D	D	D	D	D	D	E	D	C	E	D	C
HCM2kAvgQ:	4	9	9	6	7	4	8	18	4	9	15	6

****

Note: Queue reported is the number of cars per lane.

****

LLUH Campus Transformation Project
Year 2013 Without Project
Evening Peak Hour

Level Of Service Computation Report
2000 HCM Operations Method (Base Volume Alternative)

****

Intersection #14 Anderson Street (NS) at Barton Road (EW)

****

Cycle (sec): 110 Critical Vol./Cap.(X): 0.923
Loss Time (sec): 8 (Y+R=3.0 sec) Average Delay (sec/veh): 38.0
Optimal Cycle: OPTIMIZED Level Of Service: D

****

Approach:	North Bound			South Bound			East Bound			West Bound		
Movement:	L - T - R			L - T - R			L - T - R			L - T - R		
Control:	Prot+Permit			Prot+Permit			Protected			Protected		
Rights:	Include			Include			Include			Include		
Min. Green:	28	28	28	28	28	28	10	21	21	10	28	28
Lanes:	1 0	0 1	0	1 0	1 0	1	2 0	2 0	1	1 0	2 0	1
Volume Module:												
Base Vol:	190	132	82	258	121	271	160	826	54	55	817	178
Growth Adj:	1.00	1.00	1.00	1.00	1.00	1.00	1.00	1.00	1.00	1.00	1.00	1.00
Initial Bse:	190	132	82	258	121	271	160	826	54	55	817	178
User Adj:	1.00	1.00	1.00	1.00	1.00	1.00	1.00	1.00	1.00	1.00	1.00	1.00
PHF Adj:	0.73	0.73	0.73	0.90	0.90	0.90	0.90	0.90	0.90	0.96	0.96	0.96
PHF Volume:	262	182	113	285	134	300	178	921	60	57	850	185
Reduct Vol:	0	0	0	0	0	0	0	0	0	0	0	0
Reduced Vol:	262	182	113	285	134	300	178	921	60	57	850	185
PCE Adj:	1.00	1.00	1.00	1.00	1.00	1.00	1.00	1.00	1.00	1.00	1.00	1.00
MLF Adj:	1.00	1.00	1.00	1.00	1.00	1.00	1.00	1.00	1.00	1.00	1.00	1.00
FinalVolume:	262	182	113	285	134	300	178	921	60	57	850	185
Saturation Flow Module:												
Sat/Lane:	1800	1800	1800	1800	1800	1800	1800	1800	1800	1800	1800	1800
Adjustment:	0.94	1.00	1.00	0.94	1.00	1.00	0.89	1.00	1.00	0.94	1.00	1.00
Lanes:	1.00	0.62	0.38	1.00	1.00	1.00	2.00	2.00	1.00	1.00	2.00	1.00
Final Sat.:	1700	1110	690	1700	1800	1800	3200	3600	1800	1700	3600	1800
Capacity Analysis Module:												
Vol/Sat:	0.00	0.16	0.16	0.00	0.07	0.17	0.06	0.26	0.03	0.03	0.24	0.10
Crit Moves:		****		****				****		****		
Green/Cycle:	0.25	0.25	0.25	0.25	0.25	0.25	0.11	0.33	0.33	0.09	0.31	0.31
Volume/Cap:	0.60	0.64	0.64	0.66	0.29	0.65	0.51	0.78	0.10	0.37	0.77	0.33
Delay/Veh:	38.6	39.7	39.7	40.5	33.4	40.1	47.3	36.9	25.8	48.5	37.7	29.7
User DelAdj:	1.00	1.00	1.00	1.00	1.00	1.00	1.00	1.00	1.00	1.00	1.00	1.00
AdjDel/Veh:	38.6	39.7	39.7	40.5	33.4	40.1	47.3	36.9	25.8	48.5	37.7	29.7
LOS by Move:	D	D	D	D	C	D	D	D	C	D	D	C
HCM2kAvgQ:	9	10	10	10	4	10	4	16	1	2	15	5

****

Note: Queue reported is the number of cars per lane.

****

Opening Year (2013) With Project

LLUH Campus Transformation Project
Year 2013 With Project
Morning Peak Hour

Level Of Service Computation Report
2000 HCM 4-Way Stop Method (Base Volume Alternative)

Intersection #1 Campus Street (NS) at Stewart Street (EW)

Cycle (sec):	0	Critical Vol./Cap.(X):	1.054
Loss Time (sec):	0 (Y+R=4.0 sec)	Average Delay (sec/veh):	37.8
Optimal Cycle:	0	Level Of Service:	E

Approach:	North Bound			South Bound			East Bound			West Bound		
Movement:	L -	T -	R	L -	T -	R	L -	T -	R	L -	T -	R
Control:	Stop Sign			Stop Sign			Stop Sign			Stop Sign		
Rights:	Include			Include			Include			Include		
Min. Green:	0	0	0	0	0	0	0	0	0	0	0	0
Lanes:	0 1	0 0	1	0 0	1! 0	0	0 0	1! 0	0	0 1	0 0	1
Volume Module:												
Base Vol:	12	271	256	10	38	1	41	73	26	393	38	281
Growth Adj:	1.00	1.00	1.00	1.00	1.00	1.00	1.00	1.00	1.00	1.00	1.00	1.00
Initial Bse:	12	271	256	10	38	1	41	73	26	393	38	281
User Adj:	1.00	1.00	1.00	1.00	1.00	1.00	1.00	1.00	1.00	1.00	1.00	1.00
PHF Adj:	0.79	0.79	0.79	0.85	0.85	0.85	0.68	0.68	0.68	0.85	0.85	0.85
PHF Volume:	15	344	325	12	45	1	60	108	38	465	45	332
Reduct Vol:	0	0	0	0	0	0	0	0	0	0	0	0
Reduced Vol:	15	344	325	12	45	1	60	108	38	465	45	332
PCE Adj:	1.00	1.00	1.00	1.00	1.00	1.00	1.00	1.00	1.00	1.00	1.00	1.00
MLF Adj:	1.00	1.00	1.00	1.00	1.00	1.00	1.00	1.00	1.00	1.00	1.00	1.00
FinalVolume:	15	344	325	12	45	1	60	108	38	465	45	332
Saturation Flow Module:												
Adjustment:	1.00	1.00	1.00	1.00	1.00	1.00	1.00	1.00	1.00	1.00	1.00	1.00
Lanes:	0.04	0.96	1.00	0.20	0.78	0.02	0.29	0.52	0.19	0.91	0.09	1.00
Final Sat.:	21	470	544	85	323	8	139	248	88	441	43	569
Capacity Analysis Module:												
Vol/Sat:	0.73	0.73	0.60	0.14	0.14	0.14	0.43	0.43	0.43	1.05	1.05	0.58
Crit Moves:		****			****			****			****	
Delay/Veh:	27.2	27.2	18.5	12.5	12.5	12.5	15.9	15.9	15.9	82.8	82.8	17.3
Delay Adj:	1.00	1.00	1.00	1.00	1.00	1.00	1.00	1.00	1.00	1.00	1.00	1.00
AdjDel/Veh:	27.2	27.2	18.5	12.5	12.5	12.5	15.9	15.9	15.9	82.8	82.8	17.3
LOS by Move:	D	D	C	B	B	B	C	C	C	F	F	C
ApproachDel:		23.0			12.5			15.9			57.0	
Delay Adj:		1.00			1.00			1.00			1.00	
ApprAdjDel:		23.0			12.5			15.9			57.0	
LOS by Appr:		C			B			C			F	
AllWayAvgQ:	2.3	2.3	1.4	0.1	0.1	0.1	0.7	0.7	0.7	9.8	9.8	1.3

Note: Queue reported is the number of cars per lane.

LLUH Campus Transformation Project
Year 2013 With Project
Evening Peak Hour

Level Of Service Computation Report
2000 HCM 4-Way Stop Method (Base Volume Alternative)

Intersection #1 Campus Street (NS) at Stewart Street (EW)

Cycle (sec):	0	Critical Vol./Cap.(X):	0.784
Loss Time (sec):	0 (Y+R=4.0 sec)	Average Delay (sec/veh):	21.7
Optimal Cycle:	0	Level Of Service:	C

Approach:	North Bound			South Bound			East Bound			West Bound		
Movement:	L -	T -	R	L -	T -	R	L -	T -	R	L -	T -	R
Control:	Stop Sign			Stop Sign			Stop Sign			Stop Sign		
Rights:	Include			Include			Include			Include		
Min. Green:	0	0	0	0	0	0	0	0	0	0	0	0
Lanes:	0 1	0 0	1	0 0	1! 0	0	0 0	1! 0	0	0 1	0 0	1
Volume Module:												
Base Vol:	17	84	296	121	227	13	5	32	26	234	71	101
Growth Adj:	1.00	1.00	1.00	1.00	1.00	1.00	1.00	1.00	1.00	1.00	1.00	1.00
Initial Bse:	17	84	296	121	227	13	5	32	26	234	71	101
User Adj:	1.00	1.00	1.00	1.00	1.00	1.00	1.00	1.00	1.00	1.00	1.00	1.00
PHF Adj:	0.94	0.94	0.94	0.91	0.91	0.91	0.66	0.66	0.66	0.89	0.89	0.89
PHF Volume:	18	89	314	132	248	14	8	48	39	263	80	113
Reduct Vol:	0	0	0	0	0	0	0	0	0	0	0	0
Reduced Vol:	18	89	314	132	248	14	8	48	39	263	80	113
PCE Adj:	1.00	1.00	1.00	1.00	1.00	1.00	1.00	1.00	1.00	1.00	1.00	1.00
MLF Adj:	1.00	1.00	1.00	1.00	1.00	1.00	1.00	1.00	1.00	1.00	1.00	1.00
FinalVolume:	18	89	314	132	248	14	8	48	39	263	80	113
Saturation Flow Module:												
Adjustment:	1.00	1.00	1.00	1.00	1.00	1.00	1.00	1.00	1.00	1.00	1.00	1.00
Lanes:	0.17	0.83	1.00	0.33	0.63	0.04	0.08	0.51	0.41	0.77	0.23	1.00
Final Sat.:	82	404	545	169	317	18	32	206	167	362	110	548
Capacity Analysis Module:												
Vol/Sat:	0.22	0.22	0.57	0.78	0.78	0.78	0.23	0.23	0.23	0.73	0.73	0.21
Crit Moves:			****	****				****			****	
Delay/Veh:	11.8	11.8	16.7	29.7	29.7	29.7	12.8	12.8	12.8	26.3	26.3	10.7
Delay Adj:	1.00	1.00	1.00	1.00	1.00	1.00	1.00	1.00	1.00	1.00	1.00	1.00
AdjDel/Veh:	11.8	11.8	16.7	29.7	29.7	29.7	12.8	12.8	12.8	26.3	26.3	10.7
LOS by Move:	B	B	C	D	D	D	B	B	B	D	D	B
ApproachDel:		15.4			29.7			12.8			22.4	
Delay Adj:		1.00			1.00			1.00			1.00	
ApprAdjDel:		15.4			29.7			12.8			22.4	
LOS by Appr:		C			D			B			C	
AllWayAvgQ:	0.3	0.3	1.2	2.8	2.8	2.8	0.2	0.2	0.2	2.1	2.1	0.2

Note: Queue reported is the number of cars per lane.

LLUH Campus Transformation Project
Year 2013 With Project
Morning Peak Hour - With Improvements

Level Of Service Computation Report
2000 HCM Operations Method (Base Volume Alternative)

Intersection #1 Campus Street (NS) at Stewart Street (EW)

Cycle (sec): 60 Critical Vol./Cap.(X): 0.517
Loss Time (sec): 4 (Y+R=3.0 sec) Average Delay (sec/veh): 10.8
Optimal Cycle: OPTIMIZED Level Of Service: B

Approach:	North Bound			South Bound			East Bound			West Bound		
Movement:	L -	T -	R	L -	T -	R	L -	T -	R	L -	T -	R
Control:	Permitted			Permitted			Permitted			Permitted		
Rights:	Include			Include			Include			Include		
Min. Green:	18	18	18	18	18	18	18	18	18	18	18	18
Lanes:	0 1	0 0	1	0 0	1! 0	0	0 0	1! 0	0	0 1	0 0	1
Volume Module:												
Base Vol:	12	271	256	10	38	1	41	73	26	393	38	281
Growth Adj:	1.00	1.00	1.00	1.00	1.00	1.00	1.00	1.00	1.00	1.00	1.00	1.00
Initial Bse:	12	271	256	10	38	1	41	73	26	393	38	281
User Adj:	1.00	1.00	1.00	1.00	1.00	1.00	1.00	1.00	1.00	1.00	1.00	1.00
PHF Adj:	0.79	0.79	0.79	0.85	0.85	0.85	0.68	0.68	0.68	0.85	0.85	0.85
PHF Volume:	15	344	325	12	45	1	60	108	38	465	45	332
Reduct Vol:	0	0	0	0	0	0	0	0	0	0	0	0
Reduced Vol:	15	344	325	12	45	1	60	108	38	465	45	332
PCE Adj:	1.00	1.00	1.00	1.00	1.00	1.00	1.00	1.00	1.00	1.00	1.00	1.00
MLF Adj:	1.00	1.00	1.00	1.00	1.00	1.00	1.00	1.00	1.00	1.00	1.00	1.00
FinalVolume:	15	344	325	12	45	1	60	108	38	465	45	332
Saturation Flow Module:												
Sat/Lane:	1800	1800	1800	1800	1800	1800	1800	1800	1800	1800	1800	1800
Adjustment:	1.00	1.00	1.00	1.00	1.00	1.00	1.00	1.00	1.00	1.00	1.00	1.00
Lanes:	0.04	0.96	1.00	0.20	0.78	0.02	0.29	0.52	0.19	0.91	0.09	1.00
Final Sat.:	76	1724	1800	367	1396	37	527	939	334	1641	159	1800
Capacity Analysis Module:												
Vol/Sat:	0.20	0.20	0.18	0.03	0.03	0.03	0.11	0.11	0.11	0.28	0.28	0.18
Crit Moves:		****									****	
Green/Cycle:	0.39	0.39	0.39	0.39	0.39	0.39	0.55	0.55	0.55	0.55	0.55	0.55
Volume/Cap:	0.52	0.52	0.47	0.08	0.08	0.08	0.21	0.21	0.21	0.52	0.52	0.34
Delay/Veh:	14.8	14.8	14.3	11.7	11.7	11.7	7.0	7.0	7.0	9.1	9.1	7.7
User DelAdj:	1.00	1.00	1.00	1.00	1.00	1.00	1.00	1.00	1.00	1.00	1.00	1.00
AdjDel/Veh:	14.8	14.8	14.3	11.7	11.7	11.7	7.0	7.0	7.0	9.1	9.1	7.7
LOS by Move:	B	B	B	B	B	B	A	A	A	A	A	A
HCM2kAvgQ:	6	6	5	1	1	1	2	2	2	6	6	4

Note: Queue reported is the number of cars per lane.

LLUH Campus Transformation Project
Year 2013 With Project
Evening Peak Hour - With Improvements

Level Of Service Computation Report
2000 HCM Operations Method (Base Volume Alternative)

Intersection #1 Campus Street (NS) at Stewart Street (EW)

Cycle (sec): 60 Critical Vol./Cap.(X): 0.439
Loss Time (sec): 4 (Y+R=3.0 sec) Average Delay (sec/veh): 10.3
Optimal Cycle: OPTIMIZED Level Of Service: B

Approach:	North Bound			South Bound			East Bound			West Bound		
Movement:	L - T - R			L - T - R			L - T - R			L - T - R		
Control:	Permitted			Permitted			Permitted			Permitted		
Rights:	Include			Include			Include			Include		
Min. Green:	18	18	18	18	18	18	18	18	18	18	18	18
Lanes:	0 1	0 0	1	0 0	1! 0	0	0 0	1! 0	0	0 1	0 0	1
Volume Module:												
Base Vol:	17	84	296	121	227	13	5	32	26	234	71	101
Growth Adj:	1.00	1.00	1.00	1.00	1.00	1.00	1.00	1.00	1.00	1.00	1.00	1.00
Initial Bse:	17	84	296	121	227	13	5	32	26	234	71	101
User Adj:	1.00	1.00	1.00	1.00	1.00	1.00	1.00	1.00	1.00	1.00	1.00	1.00
PHF Adj:	0.94	0.94	0.94	0.91	0.91	0.91	0.66	0.66	0.66	0.89	0.89	0.89
PHF Volume:	18	89	314	132	248	14	8	48	39	263	80	113
Reduct Vol:	0	0	0	0	0	0	0	0	0	0	0	0
Reduced Vol:	18	89	314	132	248	14	8	48	39	263	80	113
PCE Adj:	1.00	1.00	1.00	1.00	1.00	1.00	1.00	1.00	1.00	1.00	1.00	1.00
MLF Adj:	1.00	1.00	1.00	1.00	1.00	1.00	1.00	1.00	1.00	1.00	1.00	1.00
FinalVolume:	18	89	314	132	248	14	8	48	39	263	80	113
Saturation Flow Module:												
Sat/Lane:	1800	1800	1800	1800	1800	1800	1800	1800	1800	1800	1800	1800
Adjustment:	1.00	1.00	1.00	1.00	1.00	1.00	1.00	1.00	1.00	1.00	1.00	1.00
Lanes:	0.17	0.83	1.00	0.33	0.63	0.04	0.08	0.51	0.41	0.77	0.23	1.00
Final Sat.:	303	1497	1800	603	1132	65	143	914	743	1381	419	1800
Capacity Analysis Module:												
Vol/Sat:	0.06	0.06	0.17	0.22	0.22	0.22	0.05	0.05	0.05	0.19	0.19	0.06
Crit Moves:					****						****	
Green/Cycle:	0.50	0.50	0.50	0.50	0.50	0.50	0.43	0.43	0.43	0.43	0.43	0.43
Volume/Cap:	0.12	0.12	0.35	0.44	0.44	0.44	0.12	0.12	0.12	0.44	0.44	0.15
Delay/Veh:	8.0	8.0	9.3	10.0	10.0	10.0	10.2	10.2	10.2	12.3	12.3	10.4
User DelAdj:	1.00	1.00	1.00	1.00	1.00	1.00	1.00	1.00	1.00	1.00	1.00	1.00
AdjDel/Veh:	8.0	8.0	9.3	10.0	10.0	10.0	10.2	10.2	10.2	12.3	12.3	10.4
LOS by Move:	A	A	A	A	A	A	B	B	B	B	B	B
HCM2kAvgQ:	1	1	4	5	5	5	1	1	1	5	5	1

Note: Queue reported is the number of cars per lane.

LLUH Campus Transformation Project
Year 2013 With Project
Morning Peak Hour

Level Of Service Computation Report
2000 HCM 4-Way Stop Method (Base Volume Alternative)

Intersection #2 Campus Street (NS) at University Avenue (EW)

Cycle (sec):	0	Critical Vol./Cap.(X):	0.831
Loss Time (sec):	0 (Y+R=4.0 sec)	Average Delay (sec/veh):	25.2
Optimal Cycle:	0	Level Of Service:	D

Approach:	North Bound			South Bound			East Bound			West Bound		
Movement:	L	T	R	L	T	R	L	T	R	L	T	R
Control:	Stop Sign			Stop Sign			Stop Sign			Stop Sign		
Rights:	Include			Include			Include			Include		
Min. Green:	0	0	0	0	0	0	0	0	0	0	0	0
Lanes:	0 1	0 0	0	0 0	0 1	0	0 0	1! 0	0	0 0	0 0	0
Volume Module:												
Base Vol:	45	336	0	0	224	177	233	0	77	0	0	0
Growth Adj:	1.00	1.00	1.00	1.00	1.00	1.00	1.00	1.00	1.00	1.00	1.00	1.00
Initial Bse:	45	336	0	0	224	177	233	0	77	0	0	0
User Adj:	1.00	1.00	1.00	1.00	1.00	1.00	1.00	1.00	1.00	1.00	1.00	1.00
PHF Adj:	0.76	0.76	0.76	0.84	0.84	0.84	0.82	0.82	0.82	1.00	1.00	1.00
PHF Volume:	59	442	0	0	268	212	283	0	94	0	0	0
Reduct Vol:	0	0	0	0	0	0	0	0	0	0	0	0
Reduced Vol:	59	442	0	0	268	212	283	0	94	0	0	0
PCE Adj:	1.00	1.00	1.00	1.00	1.00	1.00	1.00	1.00	1.00	1.00	1.00	1.00
MLF Adj:	1.00	1.00	1.00	1.00	1.00	1.00	1.00	1.00	1.00	1.00	1.00	1.00
FinalVolume:	59	442	0	0	268	212	283	0	94	0	0	0
Saturation Flow Module:												
Adjustment:	1.00	1.00	1.00	1.00	1.00	1.00	1.00	1.00	1.00	1.00	1.00	1.00
Lanes:	0.12	0.88	0.00	0.00	0.56	0.44	0.75	0.00	0.25	0.00	0.00	0.00
Final Sat.:	71	531	0	0	348	275	414	0	137	0	0	0
Capacity Analysis Module:												
Vol/Sat:	0.83	0.83	xxxx	xxxx	0.77	0.77	0.68	xxxx	0.68	xxxx	xxxx	xxxx
Crit Moves:		****			****				****			
Delay/Veh:	29.9	29.9	0.0	0.0	23.9	23.9	20.4	0.0	20.4	0.0	0.0	0.0
Delay Adj:	1.00	1.00	1.00	1.00	1.00	1.00	1.00	1.00	1.00	1.00	1.00	1.00
AdjDel/Veh:	29.9	29.9	0.0	0.0	23.9	23.9	20.4	0.0	20.4	0.0	0.0	0.0
LOS by Move:	D	D	*	*	C	C	C	*	C	*	*	*
ApproachDel:		29.9			23.9			20.4			xxxxxx	
Delay Adj:		1.00			1.00			1.00			xxxxx	
ApprAdjDel:		29.9			23.9			20.4			xxxxxx	
LOS by Appr:		D			C			C			*	
AllWayAvgQ:	3.5	3.5	3.5	2.6	2.6	2.6	1.7	1.7	1.7	0.0	0.0	0.0

Note: Queue reported is the number of cars per lane.

LLUH Campus Transformation Project
Year 2013 With Project
Evening Peak Hour

Level Of Service Computation Report
2000 HCM 4-Way Stop Method (Base Volume Alternative)

Intersection #2 Campus Street (NS) at University Avenue (EW)

Cycle (sec):	0	Critical Vol./Cap.(X):	0.701
Loss Time (sec):	0 (Y+R=4.0 sec)	Average Delay (sec/veh):	14.8
Optimal Cycle:	0	Level Of Service:	B

Approach:	North Bound			South Bound			East Bound			West Bound		
Movement:	L -	T -	R	L -	T -	R	L -	T -	R	L -	T -	R
Control:	Stop Sign			Stop Sign			Stop Sign			Stop Sign		
Rights:	Include			Include			Include			Include		
Min. Green:	0	0	0	0	0	0	0	0	0	0	0	0
Lanes:	0 1	0 0	0	0 0	0 1	0	0 0	1! 0	0	0 0	0 0	0
Volume Module:												
Base Vol:	72	212	0	0	260	219	133	0	56	0	0	0
Growth Adj:	1.00	1.00	1.00	1.00	1.00	1.00	1.00	1.00	1.00	1.00	1.00	1.00
Initial Bse:	72	212	0	0	260	219	133	0	56	0	0	0
User Adj:	1.00	1.00	1.00	1.00	1.00	1.00	1.00	1.00	1.00	1.00	1.00	1.00
PHF Adj:	0.89	0.89	0.89	0.91	0.91	0.91	0.82	0.82	0.82	1.00	1.00	1.00
PHF Volume:	81	239	0	0	285	240	162	0	68	0	0	0
Reduct Vol:	0	0	0	0	0	0	0	0	0	0	0	0
Reduced Vol:	81	239	0	0	285	240	162	0	68	0	0	0
PCE Adj:	1.00	1.00	1.00	1.00	1.00	1.00	1.00	1.00	1.00	1.00	1.00	1.00
MLF Adj:	1.00	1.00	1.00	1.00	1.00	1.00	1.00	1.00	1.00	1.00	1.00	1.00
FinalVolume:	81	239	0	0	285	240	162	0	68	0	0	0
Saturation Flow Module:												
Adjustment:	1.00	1.00	1.00	1.00	1.00	1.00	1.00	1.00	1.00	1.00	1.00	1.00
Lanes:	0.25	0.75	0.00	0.00	0.54	0.46	0.70	0.01	0.29	0.00	0.00	0.00
Final Sat.:	168	495	0	0	406	342	411	0	173	0	0	0
Capacity Analysis Module:												
Vol/Sat:	0.48	0.48	xxxx	xxxx	0.70	0.70	0.39	0.00	0.39	xxxx	xxxx	xxxx
Crit Moves:	****					****	****					
Delay/Veh:	12.7	12.7	0.0	0.0	17.4	17.4	11.9	11.9	11.9	0.0	0.0	0.0
Delay Adj:	1.00	1.00	1.00	1.00	1.00	1.00	1.00	1.00	1.00	1.00	1.00	1.00
AdjDel/Veh:	12.7	12.7	0.0	0.0	17.4	17.4	11.9	11.9	11.9	0.0	0.0	0.0
LOS by Move:	B	B	*	*	C	C	B	B	B	*	*	*
ApproachDel:	12.7			17.4			11.9			xxxxxx		
Delay Adj:	1.00			1.00			1.00			xxxxx		
ApprAdjDel:	12.7			17.4			11.9			xxxxxx		
LOS by Appr:	B			C			B			*		
AllWayAvgQ:	0.8	0.8	0.8	2.0	2.0	2.0	0.5	0.5	0.5	0.0	0.0	0.0

Note: Queue reported is the number of cars per lane.

LLUH Campus Transformation Project
Year 2013 With Project
Morning Peak Hour - With Improvements

Level Of Service Computation Report
2000 HCM Operations Method (Base Volume Alternative)

Intersection #2 Campus Street (NS) at University Avenue (EW)

Cycle (sec): 60 Critical Vol./Cap.(X): 0.522
Loss Time (sec): 4 (Y+R=3.0 sec) Average Delay (sec/veh): 10.8
Optimal Cycle: OPTIMIZED Level Of Service: B

Approach:	North Bound				South Bound				East Bound				West Bound			
Movement:	L	-	T	- R	L	-	T	- R	L	-	T	- R	L	-	T	- R
Control:	Permitted				Permitted				Permitted				Permitted			
Rights:	Include				Include				Include				Include			
Min. Green:	18	18	0	0	18	18	18	0	18	0	0	0				
Lanes:	0 1	0 0	0	0 0	0 1	0	0 0	1! 0	0	0 0	0 0	0				
Volume Module:																
Base Vol:	45	336	0	0	224	177	233	0	77	0	0	0				
Growth Adj:	1.00	1.00	1.00	1.00	1.00	1.00	1.00	1.00	1.00	1.00	1.00	1.00				
Initial Bse:	45	336	0	0	224	177	233	0	77	0	0	0				
User Adj:	1.00	1.00	1.00	1.00	1.00	1.00	1.00	1.00	1.00	1.00	1.00	1.00				
PHF Adj:	0.76	0.76	0.76	0.84	0.84	0.84	0.82	0.82	0.82	1.00	1.00	1.00				
PHF Volume:	59	442	0	0	268	212	283	0	94	0	0	0				
Reduct Vol:	0	0	0	0	0	0	0	0	0	0	0	0				
Reduced Vol:	59	442	0	0	268	212	283	0	94	0	0	0				
PCE Adj:	1.00	1.00	1.00	1.00	1.00	1.00	1.00	1.00	1.00	1.00	1.00	1.00				
MLF Adj:	1.00	1.00	1.00	1.00	1.00	1.00	1.00	1.00	1.00	1.00	1.00	1.00				
FinalVolume:	59	442	0	0	268	212	283	0	94	0	0	0				
Saturation Flow Module:																
Sat/Lane:	1800	1800	1800	1800	1800	1800	1800	1800	1800	1800	1800	1800				
Adjustment:	1.00	1.00	1.00	0.94	1.00	1.00	1.00	1.00	1.00	0.94	1.00	1.00				
Lanes:	0.12	0.88	0.00	0.00	0.56	0.44	0.75	0.00	0.25	0.00	0.00	0.00				
Final Sat.:	213	1587	0	0	1005	795	1353	0	447	0	0	0				
Capacity Analysis Module:																
Vol/Sat:	0.28	0.28	0.00	0.00	0.27	0.27	0.21	0.00	0.21	0.00	0.00	0.00				
Crit Moves:		****					****									
Green/Cycle:	0.53	0.53	0.00	0.00	0.53	0.53	0.40	0.00	0.40	0.00	0.00	0.00				
Volume/Cap:	0.52	0.52	0.00	0.00	0.50	0.50	0.52	0.00	0.52	0.00	0.00	0.00				
Delay/Veh:	9.6	9.6	0.0	0.0	9.3	9.3	14.3	0.0	14.3	0.0	0.0	0.0				
User DelAdj:	1.00	1.00	1.00	1.00	1.00	1.00	1.00	1.00	1.00	1.00	1.00	1.00				
AdjDel/Veh:	9.6	9.6	0.0	0.0	9.3	9.3	14.3	0.0	14.3	0.0	0.0	0.0				
LOS by Move:	A	A	A	A	A	A	B	A	B	A	A	A				
HCM2kAvgQ:	6	6	0	0	6	6	6	0	6	0	0	0				

Note: Queue reported is the number of cars per lane.

LLUH Campus Transformation Project
Year 2013 With Project
Evening Peak Hour - With Improvements

Level Of Service Computation Report
2000 HCM Operations Method (Base Volume Alternative)

Intersection #2 Campus Street (NS) at University Avenue (EW)

Cycle (sec): 60 Critical Vol./Cap.(X): 0.449
Loss Time (sec): 4 (Y+R=3.0 sec) Average Delay (sec/veh): 8.1
Optimal Cycle: OPTIMIZED Level Of Service: A

Approach:	North Bound				South Bound				East Bound				West Bound			
Movement:	L	- T	-	R	L	- T	-	R	L	- T	-	R	L	- T	-	R
Control:	Permitted				Permitted				Permitted				Permitted			
Rights:	Include				Include				Include				Include			
Min. Green:	18	18		0	0	18		18	18		0	18	0		0	0
Lanes:	0 1	0	0	0	0 0	0	1	0	0 0	1!	0	0	0 0	0	0	0
Volume Module:																
Base Vol:	72	212		0	0	260		219	133		0	56	0		0	0
Growth Adj:	1.00	1.00		1.00	1.00	1.00		1.00	1.00		1.00	1.00	1.00		1.00	1.00
Initial Bse:	72	212		0	0	260		219	133		0	56	0		0	0
User Adj:	1.00	1.00		1.00	1.00	1.00		1.00	1.00		1.00	1.00	1.00		1.00	1.00
PHF Adj:	0.89	0.89		0.89	0.91	0.91		0.91	0.82		0.82	0.82	1.00		1.00	1.00
PHF Volume:	81	239		0	0	285		240	162		0	68	0		0	0
Reduct Vol:	0	0		0	0	0		0	0		0	0	0		0	0
Reduced Vol:	81	239		0	0	285		240	162		0	68	0		0	0
PCE Adj:	1.00	1.00		1.00	1.00	1.00		1.00	1.00		1.00	1.00	1.00		1.00	1.00
MLF Adj:	1.00	1.00		1.00	1.00	1.00		1.00	1.00		1.00	1.00	1.00		1.00	1.00
FinalVolume:	81	239		0	0	285		240	162		0	68	0		0	0
Saturation Flow Module:																
Sat/Lane:	1800	1800		1800	1800	1800		1800	1800		1800	1800	1800		1800	1800
Adjustment:	1.00	1.00		1.00	0.94	1.00		1.00	1.00		1.00	1.00	0.94		1.00	1.00
Lanes:	0.25	0.75		0.00	0.00	0.54		0.46	0.70		0.00	0.30	0.00		0.00	0.00
Final Sat.:	456	1344		0	0	977		823	1267		0	533	0		0	0
Capacity Analysis Module:																
Vol/Sat:	0.18	0.18		0.00	0.00	0.29		0.29	0.13		0.00	0.13	0.00		0.00	0.00
Crit Moves:						****			****							
Green/Cycle:	0.63	0.63		0.00	0.00	0.63		0.63	0.30		0.00	0.30	0.00		0.00	0.00
Volume/Cap:	0.28	0.28		0.00	0.00	0.46		0.46	0.43		0.00	0.43	0.00		0.00	0.00
Delay/Veh:	5.0	5.0		0.0	0.0	6.0		6.0	17.4		0.0	17.4	0.0		0.0	0.0
User DelAdj:	1.00	1.00		1.00	1.00	1.00		1.00	1.00		1.00	1.00	1.00		1.00	1.00
AdjDel/Veh:	5.0	5.0		0.0	0.0	6.0		6.0	17.4		0.0	17.4	0.0		0.0	0.0
LOS by Move:	A	A		A	A	A		A	B		A	B	A		A	A
HCM2kAvgQ:	3	3		0	0	5		5	4		0	4	0		0	0

Note: Queue reported is the number of cars per lane.

LLUH Campus Transformation Project
Year 2013 With Project
Morning Peak Hour

Level Of Service Computation Report
2000 HCM Operations Method (Base Volume Alternative)

Intersection #3 Campus Street (NS) at Prospect Avenue (EW)

Cycle (sec): 110 Critical Vol./Cap.(X): 0.382
Loss Time (sec): 4 (Y+R=3.0 sec) Average Delay (sec/veh): 6.1
Optimal Cycle: OPTIMIZED Level Of Service: A

Approach:	North Bound			South Bound			East Bound			West Bound		
Movement:	L -	T -	R	L -	T -	R	L -	T -	R	L -	T -	R
Control:	Permitted			Permitted			Permitted			Permitted		
Rights:	Include			Include			Include			Include		
Min. Green:	18	18	18	18	18	18	21	21	21	0	0	0
Lanes:	1 0	1 0	0	0 0	1 0	1	0 0	1! 0	0	0 0	0 0	0
Volume Module:												
Base Vol:	176	483	0	0	201	37	10	0	46	0	0	0
Growth Adj:	1.00	1.00	1.00	1.00	1.00	1.00	1.00	1.00	1.00	1.00	1.00	1.00
Initial Bse:	176	483	0	0	201	37	10	0	46	0	0	0
User Adj:	1.00	1.00	1.00	1.00	1.00	1.00	1.00	1.00	1.00	1.00	1.00	1.00
PHF Adj:	0.82	0.82	0.82	0.89	0.89	0.89	0.77	0.77	0.77	1.00	1.00	1.00
PHF Volume:	215	589	0	0	225	41	13	0	60	0	0	0
Reduct Vol:	0	0	0	0	0	0	0	0	0	0	0	0
Reduced Vol:	215	589	0	0	225	41	13	0	60	0	0	0
PCE Adj:	1.00	1.00	1.00	1.00	1.00	1.00	1.00	1.00	1.00	1.00	1.00	1.00
MLF Adj:	1.00	1.00	1.00	1.00	1.00	1.00	1.00	1.00	1.00	1.00	1.00	1.00
FinalVolume:	215	589	0	0	225	41	13	0	60	0	0	0
Saturation Flow Module:												
Sat/Lane:	1800	1800	1800	1800	1800	1800	1800	1800	1800	1800	1800	1800
Adjustment:	0.94	1.00	1.00	0.94	1.00	1.00	1.00	1.00	1.00	0.94	1.00	1.00
Lanes:	1.00	1.00	0.00	0.00	1.00	1.00	0.18	0.00	0.82	0.00	0.00	0.00
Final Sat.:	1700	1800	0	0	1800	1800	321	0	1479	0	0	0
Capacity Analysis Module:												
Vol/Sat:	0.13	0.33	0.00	0.00	0.12	0.02	0.04	0.00	0.04	0.00	0.00	0.00
Crit Moves:		****					****					
Green/Cycle:	0.77	0.77	0.00	0.00	0.77	0.77	0.19	0.00	0.19	0.00	0.00	0.00
Volume/Cap:	0.16	0.42	0.00	0.00	0.16	0.03	0.21	0.00	0.21	0.00	0.00	0.00
Delay/Veh:	3.3	4.4	0.0	0.0	3.3	2.9	37.8	0.0	37.8	0.0	0.0	0.0
User DelAdj:	1.00	1.00	1.00	1.00	1.00	1.00	1.00	1.00	1.00	1.00	1.00	1.00
AdjDel/Veh:	3.3	4.4	0.0	0.0	3.3	2.9	37.8	0.0	37.8	0.0	0.0	0.0
LOS by Move:	A	A	A	A	A	A	D	A	D	A	A	A
HCM2kAvgQ:	2	7	0	0	2	0	2	0	2	0	0	0

Note: Queue reported is the number of cars per lane.

LLUH Campus Transformation Project
Year 2013 With Project
Evening Peak Hour

Level Of Service Computation Report
2000 HCM Operations Method (Base Volume Alternative)

Intersection #3 Campus Street (NS) at Prospect Avenue (EW)

Cycle (sec): 60 Critical Vol./Cap.(X): 0.329
Loss Time (sec): 4 (Y+R=3.0 sec) Average Delay (sec/veh): 8.6
Optimal Cycle: OPTIMIZED Level Of Service: A

Approach:	North Bound			South Bound			East Bound			West Bound		
Movement:	L	T	R	L	T	R	L	T	R	L	T	R
Control:	Permitted			Permitted			Permitted			Permitted		
Rights:	Include			Include			Include			Include		
Min. Green:	18	18	18	18	18	18	21	21	21	0	0	0
Lanes:	1 0	1 0	0	0 0	1 0	1	0 0	1! 0	0	0 0	0 0	0
Volume Module:												
Base Vol:	25	225	0	0	334	25	11	0	141	0	0	0
Growth Adj:	1.00	1.00	1.00	1.00	1.00	1.00	1.00	1.00	1.00	1.00	1.00	1.00
Initial Bse:	25	225	0	0	334	25	11	0	141	0	0	0
User Adj:	1.00	1.00	1.00	1.00	1.00	1.00	1.00	1.00	1.00	1.00	1.00	1.00
PHF Adj:	0.92	0.92	0.92	0.99	0.99	0.99	0.71	0.71	0.71	1.00	1.00	1.00
PHF Volume:	27	244	0	0	339	25	15	0	198	0	0	0
Reduct Vol:	0	0	0	0	0	0	0	0	0	0	0	0
Reduced Vol:	27	244	0	0	339	25	15	0	198	0	0	0
PCE Adj:	1.00	1.00	1.00	1.00	1.00	1.00	1.00	1.00	1.00	1.00	1.00	1.00
MLF Adj:	1.00	1.00	1.00	1.00	1.00	1.00	1.00	1.00	1.00	1.00	1.00	1.00
FinalVolume:	27	244	0	0	339	25	15	0	198	0	0	0
Saturation Flow Module:												
Sat/Lane:	1800	1800	1800	1800	1800	1800	1800	1800	1800	1800	1800	1800
Adjustment:	0.94	1.00	1.00	0.94	1.00	1.00	1.00	1.00	1.00	0.94	1.00	1.00
Lanes:	1.00	1.00	0.00	0.00	1.00	1.00	0.07	0.00	0.93	0.00	0.00	0.00
Final Sat.:	1700	1800	0	0	1800	1800	130	0	1670	0	0	0
Capacity Analysis Module:												
Vol/Sat:	0.02	0.14	0.00	0.00	0.19	0.01	0.12	0.00	0.12	0.00	0.00	0.00
Crit Moves:					****		****					
Green/Cycle:	0.57	0.57	0.00	0.00	0.57	0.57	0.36	0.00	0.36	0.00	0.00	0.00
Volume/Cap:	0.03	0.24	0.00	0.00	0.33	0.02	0.33	0.00	0.33	0.00	0.00	0.00
Delay/Veh:	5.6	6.5	0.0	0.0	7.0	5.6	14.2	0.0	14.2	0.0	0.0	0.0
User DelAdj:	1.00	1.00	1.00	1.00	1.00	1.00	1.00	1.00	1.00	1.00	1.00	1.00
AdjDel/Veh:	5.6	6.5	0.0	0.0	7.0	5.6	14.2	0.0	14.2	0.0	0.0	0.0
LOS by Move:	A	A	A	A	A	A	B	A	B	A	A	A
HCM2kAvgQ:	0	2	0	0	3	0	3	0	3	0	0	0

Note: Queue reported is the number of cars per lane.

LLUH Campus Transformation Project
Year 2013 With Project
Morning Peak Hour

Level Of Service Computation Report
2000 HCM Unsignalized Method (Base Volume Alternative)

Intersection #4 Campus Street (NS) at San Juan Street (EW)

Average Delay (sec/veh): 1.5 Worst Case Level Of Service: C[18.9]

Approach:	North Bound			South Bound			East Bound			West Bound		
Movement:	L -	T -	R	L -	T -	R	L -	T -	R	L -	T -	R
Control:	Uncontrolled			Uncontrolled			Stop Sign			Stop Sign		
Rights:	Include			Include			Include			Include		
Lanes:	0 1	0 0	0	0 0	1 1	0	0 0	1! 0	0	0 0	0 0	0
Volume Module:												
Base Vol:	49	839	0	0	199	11	26	0	51	0	0	0
Growth Adj:	1.00	1.00	1.00	1.00	1.00	1.00	1.00	1.00	1.00	1.00	1.00	1.00
Initial Bse:	49	839	0	0	199	11	26	0	51	0	0	0
User Adj:	1.00	1.00	1.00	1.00	1.00	1.00	1.00	1.00	1.00	1.00	1.00	1.00
PHF Adj:	0.85	0.85	0.85	0.77	0.77	0.77	0.85	0.85	0.85	1.00	1.00	1.00
PHF Volume:	58	987	0	0	259	14	31	0	60	0	0	0
Reduct Vol:	0	0	0	0	0	0	0	0	0	0	0	0
FinalVolume:	58	987	0	0	259	14	31	0	60	0	0	0
Critical Gap Module:												
Critical Gp:	4.1	xxxx	xxxxx	xxxxx	xxxx	xxxxx	6.4	6.5	6.2	xxxxx	xxxx	xxxxx
FollowUpTim:	2.2	xxxx	xxxxx	xxxxx	xxxx	xxxxx	3.5	4.0	3.3	xxxxx	xxxx	xxxxx
Capacity Module:												
Cnflict Vol:	273	xxxx	xxxxx	xxxx	xxxx	xxxxx	1368	1368	137	xxxx	xxxx	xxxxx
Potent Cap.:	1302	xxxx	xxxxx	xxxx	xxxx	xxxxx	163	148	917	xxxx	xxxx	xxxxx
Move Cap.:	1302	xxxx	xxxxx	xxxx	xxxx	xxxxx	158	141	917	xxxx	xxxx	xxxxx
Volume/Cap:	0.04	xxxx	xxxx	xxxx	xxxx	xxxx	0.19	0.00	0.07	xxxx	xxxx	xxxx
Level Of Service Module:												
2Way95thQ:	0.1	xxxx	xxxxx	xxxx	xxxx	xxxxx	xxxx	xxxx	xxxxx	xxxx	xxxx	xxxxx
Control Del:	7.9	xxxx	xxxxx	xxxxx	xxxx	xxxxx	xxxxx	xxxx	xxxxx	xxxxx	xxxx	xxxxx
LOS by Move:	A	*	*	*	*	*	*	*	*	*	*	*
Movement:	LT -	LTR -	RT	LT -	LTR -	RT	LT -	LTR -	RT	LT -	LTR -	RT
Shared Cap.:	xxxx	xxxx	xxxxx	xxxx	xxxx	xxxxx	xxxx	349	xxxxx	xxxx	xxxx	xxxxx
SharedQueue:	0.1	xxxx	xxxxx	xxxxx	xxxx	xxxxx	xxxxx	1.0	xxxxx	xxxxx	xxxx	xxxxx
Shrd ConDel:	7.9	xxxx	xxxxx	xxxxx	xxxx	xxxxx	xxxxx	18.9	xxxxx	xxxxx	xxxx	xxxxx
Shared LOS:	A	*	*	*	*	*	*	C	*	*	*	*
ApproachDel:	xxxxxx			xxxxxx				18.9		xxxxxx		
ApproachLOS:	*			*				C		*		

Note: Queue reported is the number of cars per lane.

LLUH Campus Transformation Project
Year 2013 With Project
Evening Peak Hour

Level Of Service Computation Report
2000 HCM Unsignalized Method (Base Volume Alternative)

****

Intersection #4 Campus Street (NS) at San Juan Street (EW)

****

Average Delay (sec/veh): 1.0 Worst Case Level Of Service: B[12.6]

****

Approach:	North Bound			South Bound			East Bound			West Bound		
Movement:	L -	T -	R	L -	T -	R	L -	T -	R	L -	T -	R
Control:	Uncontrolled			Uncontrolled			Stop Sign			Stop Sign		
Rights:	Include			Include			Include			Include		
Lanes:	0 1 0	0	0	0 0 1	1	0	0 0 1!	0	0	0 0 0	0	0
Volume Module:												
Base Vol:	56	283	0	0	630	24	3	0	26	0	0	0
Growth Adj:	1.00	1.00	1.00	1.00	1.00	1.00	1.00	1.00	1.00	1.00	1.00	1.00
Initial Bse:	56	283	0	0	630	24	3	0	26	0	0	0
User Adj:	1.00	1.00	1.00	1.00	1.00	1.00	1.00	1.00	1.00	1.00	1.00	1.00
PHF Adj:	0.88	0.88	0.88	0.83	0.83	0.83	0.58	0.58	0.58	1.00	1.00	1.00
PHF Volume:	64	321	0	0	761	29	5	0	45	0	0	0
Reduct Vol:	0	0	0	0	0	0	0	0	0	0	0	0
FinalVolume:	64	321	0	0	761	29	5	0	45	0	0	0
Critical Gap Module:												
Critical Gp:	4.1	xxxx	xxxxx	xxxxx	xxxx	xxxxx	6.4	6.5	6.2	xxxxx	xxxx	xxxxx
FollowUpTim:	2.2	xxxx	xxxxx	xxxxx	xxxx	xxxxx	3.5	4.0	3.3	xxxxx	xxxx	xxxxx
Capacity Module:												
Cnflict Vol:	790	xxxx	xxxxx	xxxx	xxxx	xxxxx	1225	1225	395	xxxx	xxxx	xxxxx
Potent Cap.:	839	xxxx	xxxxx	xxxx	xxxx	xxxxx	199	180	658	xxxx	xxxx	xxxxx
Move Cap.:	839	xxxx	xxxxx	xxxx	xxxx	xxxxx	187	166	658	xxxx	xxxx	xxxxx
Volume/Cap:	0.08	xxxx	xxxx	xxxx	xxxx	xxxx	0.03	0.00	0.07	xxxx	xxxx	xxxx
Level Of Service Module:												
2Way95thQ:	0.2	xxxx	xxxxx	xxxx	xxxx	xxxxx	xxxx	xxxx	xxxxx	xxxx	xxxx	xxxxx
Control Del:	9.6	xxxx	xxxxx	xxxxx	xxxx	xxxxx	xxxxx	xxxx	xxxxx	xxxxx	xxxx	xxxxx
LOS by Move:	A	*	*	*	*	*	*	*	*	*	*	*
Movement:	LT -	LTR -	RT	LT -	LTR -	RT	LT -	LTR -	RT	LT -	LTR -	RT
Shared Cap.:	xxxx	xxxx	xxxxx	xxxx	xxxx	xxxxx	xxxx	523	xxxxx	xxxx	xxxx	xxxxx
SharedQueue:	0.2	xxxx	xxxxx	xxxxx	xxxx	xxxxx	xxxxx	0.3	xxxxx	xxxxx	xxxx	xxxxx
Shrd ConDel:	9.6	xxxx	xxxxx	xxxxx	xxxx	xxxxx	xxxxx	12.6	xxxxx	xxxxx	xxxx	xxxxx
Shared LOS:	A	*	*	*	*	*	*	B	*	*	*	*
ApproachDel:	xxxxxx			xxxxxx			12.6			xxxxxx		
ApproachLOS:	*			*			B			*		

****

Note: Queue reported is the number of cars per lane.

****

LLUH Campus Transformation Project
Year 2013 With Project
Morning Peak Hour

Level Of Service Computation Report
2000 HCM Operations Method (Base Volume Alternative)

Intersection #5 Campus Street (NS) at Barton Road (EW)

Cycle (sec): 130 Critical Vol./Cap.(X): 0.972
Loss Time (sec): 8 (Y+R=3.0 sec) Average Delay (sec/veh): 46.6
Optimal Cycle: OPTIMIZED Level Of Service: D

Approach:	North Bound			South Bound			East Bound			West Bound		
Movement:	L - T - R			L - T - R			L - T - R			L - T - R		
Control:	Prot+Permit			Prot+Permit			Protected			Protected		
Rights:	Include			Include			Include			Include		
Min. Green:	28	28	28	28	28	28	10	18	18	10	21	21
Lanes:	1 0	0 1	0	1 0	1 0	1	1 0	2 0	1	1 0	2 0	1
Volume Module:												
Base Vol:	111	138	11	177	31	66	189	1056	33	17	482	495
Growth Adj:	1.00	1.00	1.00	1.00	1.00	1.00	1.00	1.00	1.00	1.00	1.00	1.00
Initial Bse:	111	138	11	177	31	66	189	1056	33	17	482	495
User Adj:	1.00	1.00	1.00	1.00	1.00	1.00	1.00	1.00	1.00	1.00	1.00	1.00
PHF Adj:	0.76	0.76	0.76	0.79	0.79	0.79	0.87	0.87	0.87	0.78	0.78	0.78
PHF Volume:	146	182	14	225	39	84	218	1221	38	22	618	635
Reduct Vol:	0	0	0	0	0	0	0	0	0	0	0	0
Reduced Vol:	146	182	14	225	39	84	218	1221	38	22	618	635
PCE Adj:	1.00	1.00	1.00	1.00	1.00	1.00	1.00	1.00	1.00	1.00	1.00	1.00
MLF Adj:	1.00	1.00	1.00	1.00	1.00	1.00	1.00	1.00	1.00	1.00	1.00	1.00
FinalVolume:	146	182	14	225	39	84	218	1221	38	22	618	635
Saturation Flow Module:												
Sat/Lane:	1800	1800	1800	1800	1800	1800	1800	1800	1800	1800	1800	1800
Adjustment:	0.94	1.00	1.00	0.94	1.00	1.00	0.94	1.00	1.00	0.94	1.00	1.00
Lanes:	1.00	0.93	0.07	1.00	1.00	1.00	1.00	2.00	1.00	1.00	2.00	1.00
Final Sat.:	1700	1667	133	1700	1800	1800	1700	3600	1800	1700	3600	1800
Capacity Analysis Module:												
Vol/Sat:	0.00	0.11	0.11	0.00	0.02	0.05	0.13	0.34	0.02	0.01	0.17	0.35
Crit Moves:		****		****			****					****
Green/Cycle:	0.22	0.22	0.22	0.22	0.22	0.22	0.14	0.41	0.41	0.09	0.37	0.37
Volume/Cap:	0.40	0.51	0.51	0.62	0.10	0.22	0.95	0.82	0.05	0.14	0.46	0.95
Delay/Veh:	44.5	46.0	46.0	49.3	41.0	42.3	100.4	37.5	22.8	54.5	31.2	62.3
User DelAdj:	1.00	1.00	1.00	1.00	1.00	1.00	1.00	1.00	1.00	1.00	1.00	1.00
AdjDel/Veh:	44.5	46.0	46.0	49.3	41.0	42.3	100.4	37.5	22.8	54.5	31.2	62.3
LOS by Move:	D	D	D	D	D	D	F	D	C	D	C	E
HCM2kAvgQ:	5	7	7	9	1	3	13	23	1	1	9	29

Note: Queue reported is the number of cars per lane.

LLUH Campus Transformation Project
Year 2013 With Project
Evening Peak Hour

Level Of Service Computation Report
2000 HCM Operations Method (Base Volume Alternative)

****

Intersection #5 Campus Street (NS) at Barton Road (EW)

****

Cycle (sec): 130 Critical Vol./Cap.(X): 0.964
Loss Time (sec): 8 (Y+R=3.0 sec) Average Delay (sec/veh): 50.8
Optimal Cycle: OPTIMIZED Level Of Service: D

****

Approach:	North Bound			South Bound			East Bound			West Bound		
Movement:	L - T - R			L - T - R			L - T - R			L - T - R		
Control:	Prot+Permit			Prot+Permit			Protected			Protected		
Rights:	Include			Include			Include			Include		
Min. Green:	28	28	28	28	28	28	10	18	18	10	21	21
Lanes:	1 0 0	1 0		1 0	1 0	1	1 0	2 0	1	1 0	2 0	1
Volume Module:												
Base Vol:	75	31	15	416	79	122	57	614	51	30	1101	198
Growth Adj:	1.00	1.00	1.00	1.00	1.00	1.00	1.00	1.00	1.00	1.00	1.00	1.00
Initial Bse:	75	31	15	416	79	122	57	614	51	30	1101	198
User Adj:	1.00	1.00	1.00	1.00	1.00	1.00	1.00	1.00	1.00	1.00	1.00	1.00
PHF Adj:	0.70	0.70	0.70	0.86	0.86	0.86	0.89	0.89	0.89	0.93	0.93	0.93
PHF Volume:	108	44	22	481	91	141	64	689	57	32	1186	213
Reduct Vol:	0	0	0	0	0	0	0	0	0	0	0	0
Reduced Vol:	108	44	22	481	91	141	64	689	57	32	1186	213
PCE Adj:	1.00	1.00	1.00	1.00	1.00	1.00	1.00	1.00	1.00	1.00	1.00	1.00
MLF Adj:	1.00	1.00	1.00	1.00	1.00	1.00	1.00	1.00	1.00	1.00	1.00	1.00
FinalVolume:	108	44	22	481	91	141	64	689	57	32	1186	213
Saturation Flow Module:												
Sat/Lane:	1800	1800	1800	1800	1800	1800	1800	1800	1800	1800	1800	1800
Adjustment:	0.94	1.00	1.00	0.94	1.00	1.00	0.94	1.00	1.00	0.94	1.00	1.00
Lanes:	1.00	0.67	0.33	1.00	1.00	1.00	1.00	2.00	1.00	1.00	2.00	1.00
Final Sat.:	1700	1213	587	1700	1800	1800	1700	3600	1800	1700	3600	1800
Capacity Analysis Module:												
Vol/Sat:	0.00	0.04	0.04	0.00	0.05	0.08	0.04	0.19	0.03	0.02	0.33	0.12
Crit Moves:		****		****			****				****	
Green/Cycle:	0.26	0.22	0.22	0.30	0.26	0.26	0.08	0.30	0.30	0.12	0.35	0.35
Volume/Cap:	0.25	0.17	0.17	0.95	0.20	0.31	0.49	0.63	0.10	0.16	0.95	0.34
Delay/Veh:	38.6	41.7	41.7	72.0	38.0	39.3	60.4	40.3	32.7	51.5	56.0	31.7
User DelAdj:	1.00	1.00	1.00	1.00	1.00	1.00	1.00	1.00	1.00	1.00	1.00	1.00
AdjDel/Veh:	38.6	41.7	41.7	72.0	38.0	39.3	60.4	40.3	32.7	51.5	56.0	31.7
LOS by Move:	D	D	D	E	D	D	E	D	C	D	E	C
HCM2kAvgQ:	4	2	2	24	3	5	3	12	2	1	28	6

****

Note: Queue reported is the number of cars per lane.

****

LLUH Campus Transformation Project
Year 2013 With Project
Morning Peak Hour - With Improvements

Level Of Service Computation Report
2000 HCM Operations Method (Base Volume Alternative)

Intersection #5 Campus Street (NS) at Barton Road (EW)

Cycle (sec): 130 Critical Vol./Cap.(X): 0.572
Loss Time (sec): 8 (Y+R=3.0 sec) Average Delay (sec/veh): 35.9
Optimal Cycle: OPTIMIZED Level Of Service: D

Approach:	North Bound			South Bound			East Bound			West Bound		
Movement:	L - T - R			L - T - R			L - T - R			L - T - R		
Control:	Split Phase			Split Phase			Protected			Protected		
Rights:	Include			Include			Include			Ovl		
Min. Green:	28	28	28	28	28	28	10	18	18	10	21	21
Lanes:	1 0	0 1	0	1 1	0 0	1	1 0	2 0	1	1 0	2 0	1
Volume Module:												
Base Vol:	111	138	11	177	31	66	189	1056	33	17	482	495
Growth Adj:	1.00	1.00	1.00	1.00	1.00	1.00	1.00	1.00	1.00	1.00	1.00	1.00
Initial Bse:	111	138	11	177	31	66	189	1056	33	17	482	495
User Adj:	1.00	1.00	1.00	1.00	1.00	1.00	1.00	1.00	1.00	1.00	1.00	1.00
PHF Adj:	0.76	0.76	0.76	0.79	0.79	0.79	0.87	0.87	0.87	0.78	0.78	0.78
PHF Volume:	146	182	14	225	39	84	218	1221	38	22	618	635
Reduct Vol:	0	0	0	0	0	0	0	0	0	0	0	0
Reduced Vol:	146	182	14	225	39	84	218	1221	38	22	618	635
PCE Adj:	1.00	1.00	1.00	1.00	1.00	1.00	1.00	1.00	1.00	1.00	1.00	1.00
MLF Adj:	1.00	1.00	1.00	1.00	1.00	1.00	1.00	1.00	1.00	1.00	1.00	1.00
FinalVolume:	146	182	14	225	39	84	218	1221	38	22	618	635
Saturation Flow Module:												
Sat/Lane:	1800	1800	1800	1800	1800	1800	1800	1800	1800	1800	1800	1800
Adjustment:	0.94	1.00	1.00	0.97	1.00	1.00	0.94	1.00	1.00	0.94	1.00	1.00
Lanes:	1.00	0.93	0.07	1.71	0.29	1.00	1.00	2.00	1.00	1.00	2.00	1.00
Final Sat.:	1700	1667	133	2978	522	1800	1700	3600	1800	1700	3600	1800
Capacity Analysis Module:												
Vol/Sat:	0.09	0.11	0.11	0.08	0.08	0.05	0.13	0.34	0.02	0.01	0.17	0.35
Crit Moves:		****			****			****		****		
Green/Cycle:	0.22	0.22	0.22	0.22	0.22	0.22	0.16	0.43	0.43	0.08	0.35	0.56
Volume/Cap:	0.40	0.51	0.51	0.35	0.35	0.22	0.80	0.79	0.05	0.17	0.50	0.63
Delay/Veh:	44.5	46.0	46.0	43.6	43.6	42.3	67.6	34.6	21.5	56.7	33.8	20.5
User DelAdj:	1.00	1.00	1.00	1.00	1.00	1.00	1.00	1.00	1.00	1.00	1.00	1.00
AdjDel/Veh:	44.5	46.0	46.0	43.6	43.6	42.3	67.6	34.6	21.5	56.7	33.8	20.5
LOS by Move:	D	D	D	D	D	D	E	C	C	E	C	C
HCM2kAvgQ:	5	7	7	5	5	3	11	22	1	1	10	17

Note: Queue reported is the number of cars per lane.

LLUH Campus Transformation Project
Year 2013 With Project
Evening Peak Hour - With Improvements

Level Of Service Computation Report
2000 HCM Operations Method (Base Volume Alternative)

Intersection #5 Campus Street (NS) at Barton Road (EW)

Cycle (sec): 130 Critical Vol./Cap.(X): 0.633
Loss Time (sec): 8 (Y+R=3.0 sec) Average Delay (sec/veh): 36.9
Optimal Cycle: OPTIMIZED Level Of Service: D

Approach:	North Bound			South Bound			East Bound			West Bound		
Movement:	L - T - R			L - T - R			L - T - R			L - T - R		
Control:	Split Phase			Split Phase			Protected			Protected		
Rights:	Include			Include			Include			Ovl		
Min. Green:	28	28	28	28	28	28	10	18	18	10	21	21
Lanes:	1 0	0 1	0	1 1	0 0	1	1 0	2 0	1	1 0	2 0	1
Volume Module:												
Base Vol:	75	31	15	416	79	122	57	614	51	30	1101	198
Growth Adj:	1.00	1.00	1.00	1.00	1.00	1.00	1.00	1.00	1.00	1.00	1.00	1.00
Initial Bse:	75	31	15	416	79	122	57	614	51	30	1101	198
User Adj:	1.00	1.00	1.00	1.00	1.00	1.00	1.00	1.00	1.00	1.00	1.00	1.00
PHF Adj:	0.70	0.70	0.70	0.86	0.86	0.86	0.89	0.89	0.89	0.93	0.93	0.93
PHF Volume:	108	44	22	481	91	141	64	689	57	32	1186	213
Reduct Vol:	0	0	0	0	0	0	0	0	0	0	0	0
Reduced Vol:	108	44	22	481	91	141	64	689	57	32	1186	213
PCE Adj:	1.00	1.00	1.00	1.00	1.00	1.00	1.00	1.00	1.00	1.00	1.00	1.00
MLF Adj:	1.00	1.00	1.00	1.00	1.00	1.00	1.00	1.00	1.00	1.00	1.00	1.00
FinalVolume:	108	44	22	481	91	141	64	689	57	32	1186	213
Saturation Flow Module:												
Sat/Lane:	1800	1800	1800	1800	1800	1800	1800	1800	1800	1800	1800	1800
Adjustment:	0.94	1.00	1.00	0.97	1.00	1.00	0.94	1.00	1.00	0.94	1.00	1.00
Lanes:	1.00	0.67	0.33	1.69	0.31	1.00	1.00	2.00	1.00	1.00	2.00	1.00
Final Sat.:	1700	1213	587	2941	559	1800	1700	3600	1800	1700	3600	1800
Capacity Analysis Module:												
Vol/Sat:	0.06	0.04	0.04	0.16	0.16	0.08	0.04	0.19	0.03	0.02	0.33	0.12
Crit Moves:	****				****		****				****	
Green/Cycle:	0.22	0.22	0.22	0.22	0.22	0.22	0.08	0.36	0.36	0.15	0.43	0.65
Volume/Cap:	0.29	0.17	0.17	0.76	0.76	0.36	0.49	0.53	0.09	0.13	0.77	0.18
Delay/Veh:	43.2	41.7	41.7	52.4	52.4	44.0	60.4	33.1	27.4	48.6	33.7	9.3
User DelAdj:	1.00	1.00	1.00	1.00	1.00	1.00	1.00	1.00	1.00	1.00	1.00	1.00
AdjDel/Veh:	43.2	41.7	41.7	52.4	52.4	44.0	60.4	33.1	27.4	48.6	33.7	9.3
LOS by Move:	D	D	D	D	D	D	E	C	C	D	C	A
HCM2kAvgQ:	4	2	2	13	13	5	3	11	1	1	21	3

Note: Queue reported is the number of cars per lane.

LLUH Campus Transformation Project
Year 2013 With Project
Morning Peak Hour

Level Of Service Computation Report
2000 HCM Unsignalized Method (Base Volume Alternative)

Intersection #6 Parkland Street (NS) at Stewart Street (EW)

Average Delay (sec/veh): 1.0 Worst Case Level Of Service: B[10.8]

Approach:	North Bound			South Bound			East Bound			West Bound		
Movement:	L -	T -	R	L -	T -	R	L -	T -	R	L -	T -	R
Control:	Stop Sign			Stop Sign			Uncontrolled			Uncontrolled		
Rights:	Include			Include			Include			Include		
Lanes:	0 0	0 0	0	0 0	1! 0	0	0 1	0 0	0	0 0	0 1	0
Volume Module:												
Base Vol:	0	0	0	6	0	16	33	264	0	0	196	11
Growth Adj:	1.00	1.00	1.00	1.00	1.00	1.00	1.00	1.00	1.00	1.00	1.00	1.00
Initial Bse:	0	0	0	6	0	16	33	264	0	0	196	11
User Adj:	1.00	1.00	1.00	1.00	1.00	1.00	1.00	1.00	1.00	1.00	1.00	1.00
PHF Adj:	1.00	1.00	1.00	0.79	0.79	0.79	0.80	0.80	0.80	0.85	0.85	0.85
PHF Volume:	0	0	0	8	0	20	41	330	0	0	231	13
Reduct Vol:	0	0	0	0	0	0	0	0	0	0	0	0
FinalVolume:	0	0	0	8	0	20	41	330	0	0	231	13
Critical Gap Module:												
Critical Gp:	xxxxx	xxxx	xxxxx	6.4	6.5	6.2	4.1	xxxx	xxxxx	xxxxx	xxxx	xxxxx
FollowUpTim:	xxxxx	xxxx	xxxxx	3.5	4.0	3.3	2.2	xxxx	xxxxx	xxxxx	xxxx	xxxxx
Capacity Module:												
Cnflict Vol:	xxxx	xxxx	xxxxx	651	651	238	244	xxxx	xxxxx	xxxx	xxxx	xxxxx
Potent Cap.:	xxxx	xxxx	xxxxx	436	390	806	1334	xxxx	xxxxx	xxxx	xxxx	xxxxx
Move Cap.:	xxxx	xxxx	xxxxx	426	378	806	1334	xxxx	xxxxx	xxxx	xxxx	xxxxx
Volume/Cap:	xxxx	xxxx	xxxx	0.02	0.00	0.03	0.03	xxxx	xxxx	xxxx	xxxx	xxxx
Level Of Service Module:												
2Way95thQ:	xxxx	xxxx	xxxxx	xxxx	xxxx	xxxxx	0.1	xxxx	xxxxx	xxxx	xxxx	xxxxx
Control Del:	xxxxx	xxxx	xxxxx	xxxxx	xxxx	xxxxx	7.8	xxxx	xxxxx	xxxxx	xxxx	xxxxx
LOS by Move:	*	*	*	*	*	*	A	*	*	*	*	*
Movement:	LT -	LTR -	RT	LT -	LTR -	RT	LT -	LTR -	RT	LT -	LTR -	RT
Shared Cap.:	xxxx	xxxx	xxxxx	xxxx	648	xxxxx	xxxx	xxxx	xxxxx	xxxx	xxxx	xxxxx
SharedQueue:	xxxxx	xxxx	xxxxx	xxxxx	0.1	xxxxx	0.1	xxxx	xxxxx	xxxxx	xxxx	xxxxx
Shrd ConDel:	xxxxx	xxxx	xxxxx	xxxxx	10.8	xxxxx	7.8	xxxx	xxxxx	xxxxx	xxxx	xxxxx
Shared LOS:	*	*	*	*	B	*	A	*	*	*	*	*
ApproachDel:	xxxxxx				10.8		xxxxxx			xxxxxx		
ApproachLOS:	*				B		*			*		

Note: Queue reported is the number of cars per lane.

LLUH Campus Transformation Project
Year 2013 With Project
Evening Peak Hour

Level Of Service Computation Report
2000 HCM Unsignalized Method (Base Volume Alternative)

Intersection #6 Parkland Street (NS) at Stewart Street (EW)

Average Delay (sec/veh): 0.8 Worst Case Level Of Service: B[12.3]

Approach:	North Bound			South Bound			East Bound			West Bound		
Movement:	L - T - R			L - T - R			L - T - R			L - T - R		
Control:	Stop Sign			Stop Sign			Uncontrolled			Uncontrolled		
Rights:	Include			Include			Include			Include		
Lanes:	0 0 0 0 0			0 0 1! 0 0			0 1 0 0 0			0 0 0 1 0		
Volume Module:												
Base Vol:	0	0	0	12	0	18	13	258	0	0	292	10
Growth Adj:	1.00	1.00	1.00	1.00	1.00	1.00	1.00	1.00	1.00	1.00	1.00	1.00
Initial Bse:	0	0	0	12	0	18	13	258	0	0	292	10
User Adj:	1.00	1.00	1.00	1.00	1.00	1.00	1.00	1.00	1.00	1.00	1.00	1.00
PHF Adj:	1.00	1.00	1.00	0.84	0.84	0.84	0.81	0.81	0.81	0.81	0.81	0.81
PHF Volume:	0	0	0	14	0	21	16	317	0	0	362	12
Reduct Vol:	0	0	0	0	0	0	0	0	0	0	0	0
FinalVolume:	0	0	0	14	0	21	16	317	0	0	362	12
Critical Gap Module:												
Critical Gp:	xxxxx	xxxx	xxxxx	6.4	6.5	6.2	4.1	xxxx	xxxxx	xxxxx	xxxx	xxxxx
FollowUpTim:	xxxxx	xxxx	xxxxx	3.5	4.0	3.3	2.2	xxxx	xxxxx	xxxxx	xxxx	xxxxx
Capacity Module:												
Cnflict Vol:	xxxx	xxxx	xxxxx	717	717	369	375	xxxx	xxxxx	xxxx	xxxx	xxxxx
Potent Cap.:	xxxx	xxxx	xxxxx	399	358	681	1195	xxxx	xxxxx	xxxx	xxxx	xxxxx
Move Cap.:	xxxx	xxxx	xxxxx	395	353	681	1195	xxxx	xxxxx	xxxx	xxxx	xxxxx
Volume/Cap:	xxxx	xxxx	xxxx	0.04	0.00	0.03	0.01	xxxx	xxxx	xxxx	xxxx	xxxx
Level Of Service Module:												
2Way95thQ:	xxxx	xxxx	xxxxx	xxxx	xxxx	xxxxx	0.0	xxxx	xxxxx	xxxx	xxxx	xxxxx
Control Del:	xxxxx	xxxx	xxxxx	xxxxx	xxxx	xxxxx	8.1	xxxx	xxxxx	xxxxx	xxxx	xxxxx
LOS by Move:	*	*	*	*	*	*	A	*	*	*	*	*
Movement:	LT -	LTR -	RT	LT -	LTR -	RT	LT -	LTR -	RT	LT -	LTR -	RT
Shared Cap.:	xxxx	xxxx	xxxxx	xxxx	528	xxxxx	xxxx	xxxx	xxxxx	xxxx	xxxx	xxxxx
SharedQueue:	xxxxx	xxxx	xxxxx	xxxxx	0.2	xxxxx	0.0	xxxx	xxxxx	xxxxx	xxxx	xxxxx
Shrd ConDel:	xxxxx	xxxx	xxxxx	xxxxx	12.3	xxxxx	8.1	xxxx	xxxxx	xxxxx	xxxx	xxxxx
Shared LOS:	*	*	*	*	B	*	A	*	*	*	*	*
ApproachDel:	xxxxxx			12.3			xxxxxx			xxxxxx		
ApproachLOS:	*			B			*			*		

Note: Queue reported is the number of cars per lane.

LLUH Campus Transformation Project
Year 2013 With Project
Morning Peak Hour

Level Of Service Computation Report
2000 HCM Operations Method (Base Volume Alternative)

****

Intersection #7 Anderson Street (NS) at Stewart Street (EW)

****

Cycle (sec): 90 Critical Vol./Cap.(X): 0.615
Loss Time (sec): 6 (Y+R=3.0 sec) Average Delay (sec/veh): 21.6
Optimal Cycle: OPTIMIZED Level Of Service: C

****

Approach:	North Bound						South Bound						East Bound						West Bound					
Movement:	L	-	T	-	R		L	-	T	-	R		L	-	T	-	R		L	-	T	-	R	
Control:	Protected						Protected						Permitted						Permitted					
Rights:	Include						Include						Include						Include					
Min. Green:	10		18		18		10		18		18		28		28		28		28		28		28	
Lanes:	1	0	2	0	1		1	0	2	0	1		1	0	0	1	0		1	0	0	1	0	
Volume Module:																								
Base Vol:	50		267		36		261		622		603		231		73		42		24		68		149	
Growth Adj:	1.00		1.00		1.00		1.00		1.00		1.00		1.00		1.00		1.00		1.00		1.00		1.00	
Initial Bse:	50		267		36		261		622		603		231		73		42		24		68		149	
User Adj:	1.00		1.00		1.00		1.00		1.00		1.00		1.00		1.00		1.00		1.00		1.00		1.00	
PHF Adj:	0.77		0.77		0.77		0.86		0.86		0.86		0.93		0.93		0.93		0.85		0.85		0.85	
PHF Volume:	65		348		47		303		723		701		249		79		45		28		80		174	
Reduct Vol:	0		0		0		0		0		0		0		0		0		0		0		0	
Reduced Vol:	65		348		47		303		723		701		249		79		45		28		80		174	
PCE Adj:	1.00		1.00		1.00		1.00		1.00		1.00		1.00		1.00		1.00		1.00		1.00		1.00	
MLF Adj:	1.00		1.00		1.00		1.00		1.00		1.00		1.00		1.00		1.00		1.00		1.00		1.00	
FinalVolume:	65		348		47		303		723		701		249		79		45		28		80		174	
Saturation Flow Module:																								
Sat/Lane:	1800		1800		1800		1800		1800		1800		1800		1800		1800		1800		1800		1800	
Adjustment:	0.94		1.00		1.00		0.94		1.00		1.00		0.94		1.00		1.00		0.94		1.00		1.00	
Lanes:	1.00		2.00		1.00		1.00		2.00		1.00		1.00		0.63		0.37		1.00		0.31		0.69	
Final Sat.:	1700		3600		1800		1700		3600		1800		1700		1143		657		1700		564		1236	
Capacity Analysis Module:																								
Vol/Sat:	0.04		0.10		0.03		0.18		0.20		0.39		0.15		0.07		0.07		0.02		0.14		0.14	
Crit Moves:	****										****		****											
Green/Cycle:	0.11		0.33		0.33		0.29		0.51		0.51		0.31		0.31		0.31		0.31		0.31		0.31	
Volume/Cap:	0.34		0.29		0.08		0.61		0.39		0.76		0.47		0.22		0.22		0.05		0.45		0.45	
Delay/Veh:	38.1		22.6		20.9		29.5		13.6		21.4		25.7		23.1		23.1		21.8		25.5		25.5	
User DelAdj:	1.00		1.00		1.00		1.00		1.00		1.00		1.00		1.00		1.00		1.00		1.00		1.00	
AdjDel/Veh:	38.1		22.6		20.9		29.5		13.6		21.4		25.7		23.1		23.1		21.8		25.5		25.5	
LOS by Move:	D		C		C		C		B		C		C		C		C		C		C		C	
HCM2kAvgQ:	2		4		1		8		6		17		6		3		3		1		6		6	

****

Note: Queue reported is the number of cars per lane.

****

LLUH Campus Transformation Project
Year 2013 With Project
Evening Peak Hour

Level Of Service Computation Report
2000 HCM Operations Method (Base Volume Alternative)

Intersection #7 Anderson Street (NS) at Stewart Street (EW)

Cycle (sec): 60 Critical Vol./Cap.(X): 0.525
Loss Time (sec): 6 (Y+R=3.0 sec) Average Delay (sec/veh): 16.4
Optimal Cycle: OPTIMIZED Level Of Service: B

Approach:	North Bound			South Bound			East Bound			West Bound		
Movement:	L - T - R			L - T - R			L - T - R			L - T - R		
Control:	Protected			Protected			Permitted			Permitted		
Rights:	Include			Include			Include			Include		
Min. Green:	10	18	18	10	18	18	28	28	28	28	28	28
Lanes:	1 0 2 0 1			1 0 2 0 1			1 0 0 1 0			1 0 0 1 0		
Volume Module:												
Base Vol:	36	508	18	146	369	273	267	126	64	25	90	305
Growth Adj:	1.00	1.00	1.00	1.00	1.00	1.00	1.00	1.00	1.00	1.00	1.00	1.00
Initial Bse:	36	508	18	146	369	273	267	126	64	25	90	305
User Adj:	1.00	1.00	1.00	1.00	1.00	1.00	1.00	1.00	1.00	1.00	1.00	1.00
PHF Adj:	0.96	0.96	0.96	0.97	0.97	0.97	0.90	0.90	0.90	0.92	0.92	0.92
PHF Volume:	38	530	19	151	381	282	297	140	71	27	98	331
Reduct Vol:	0	0	0	0	0	0	0	0	0	0	0	0
Reduced Vol:	38	530	19	151	381	282	297	140	71	27	98	331
PCE Adj:	1.00	1.00	1.00	1.00	1.00	1.00	1.00	1.00	1.00	1.00	1.00	1.00
MLF Adj:	1.00	1.00	1.00	1.00	1.00	1.00	1.00	1.00	1.00	1.00	1.00	1.00
FinalVolume:	38	530	19	151	381	282	297	140	71	27	98	331
Saturation Flow Module:												
Sat/Lane:	1800	1800	1800	1800	1800	1800	1800	1800	1800	1800	1800	1800
Adjustment:	0.94	1.00	1.00	0.94	1.00	1.00	0.94	1.00	1.00	0.94	1.00	1.00
Lanes:	1.00	2.00	1.00	1.00	2.00	1.00	1.00	0.66	0.34	1.00	0.23	0.77
Final Sat.:	1700	3600	1800	1700	3600	1800	1700	1194	606	1700	410	1390
Capacity Analysis Module:												
Vol/Sat:	0.02	0.15	0.01	0.09	0.11	0.16	0.17	0.12	0.12	0.02	0.24	0.24
Crit Moves:		****		****							****	
Green/Cycle:	0.16	0.29	0.29	0.16	0.29	0.29	0.45	0.45	0.45	0.45	0.45	0.45
Volume/Cap:	0.14	0.51	0.04	0.55	0.36	0.54	0.39	0.26	0.26	0.04	0.53	0.53
Delay/Veh:	22.5	18.7	15.8	26.3	17.7	19.7	11.6	10.7	10.7	9.5	12.9	12.9
User DelAdj:	1.00	1.00	1.00	1.00	1.00	1.00	1.00	1.00	1.00	1.00	1.00	1.00
AdjDel/Veh:	22.5	18.7	15.8	26.3	17.7	19.7	11.6	10.7	10.7	9.5	12.9	12.9
LOS by Move:	C	B	B	C	B	B	B	B	B	A	B	B
HCM2kAvgQ:	1	5	0	4	3	5	4	3	3	0	6	6

Note: Queue reported is the number of cars per lane.

LLUH Campus Transformation Project
Year 2013 With Project
Morning Peak Hour

Level Of Service Computation Report
2000 HCM Operations Method (Base Volume Alternative)

****

Intersection #8 Anderson Street (NS) at University Avenue (EW)

****

Cycle (sec): 130 Critical Vol./Cap.(X): 0.269
Loss Time (sec): 4 (Y+R=3.0 sec) Average Delay (sec/veh): 6.3
Optimal Cycle: OPTIMIZED Level Of Service: A

****

Approach:	North Bound			South Bound			East Bound			West Bound		
Movement:	L -	T -	R	L -	T -	R	L -	T -	R	L -	T -	R
Control:	Permitted			Permitted			Permitted			Permitted		
Rights:	Include			Include			Include			Include		
Min. Green:	18	18	18	18	18	18	28	28	28	0	0	0
Lanes:	1 0	2 0	0	0 0	2 0	1	1 0	0 0	1	0 0	0 0	0
Volume Module:												
Base Vol:	57	325	0	0	607	101	26	0	22	0	0	0
Growth Adj:	1.00	1.00	1.00	1.00	1.00	1.00	1.00	1.00	1.00	1.00	1.00	1.00
Initial Bse:	57	325	0	0	607	101	26	0	22	0	0	0
User Adj:	1.00	1.00	1.00	1.00	1.00	1.00	1.00	1.00	1.00	1.00	1.00	1.00
PHF Adj:	0.81	0.81	0.81	0.70	0.70	0.70	0.79	0.79	0.79	1.00	1.00	1.00
PHF Volume:	71	404	0	0	870	145	33	0	28	0	0	0
Reduct Vol:	0	0	0	0	0	0	0	0	0	0	0	0
Reduced Vol:	71	404	0	0	870	145	33	0	28	0	0	0
PCE Adj:	1.00	1.00	1.00	1.00	1.00	1.00	1.00	1.00	1.00	1.00	1.00	1.00
MLF Adj:	1.00	1.00	1.00	1.00	1.00	1.00	1.00	1.00	1.00	1.00	1.00	1.00
FinalVolume:	71	404	0	0	870	145	33	0	28	0	0	0
Saturation Flow Module:												
Sat/Lane:	1800	1800	1800	1800	1800	1800	1800	1800	1800	1800	1800	1800
Adjustment:	0.94	1.00	1.00	0.94	1.00	1.00	0.94	1.00	1.00	0.94	1.00	1.00
Lanes:	1.00	2.00	0.00	0.00	2.00	1.00	1.00	0.00	1.00	0.00	0.00	0.00
Final Sat.:	1700	3600	0	0	3600	1800	1700	0	1800	0	0	0
Capacity Analysis Module:												
Vol/Sat:	0.04	0.11	0.00	0.00	0.24	0.08	0.02	0.00	0.02	0.00	0.00	0.00
Crit Moves:					****		****					
Green/Cycle:	0.75	0.75	0.00	0.00	0.75	0.75	0.22	0.00	0.22	0.00	0.00	0.00
Volume/Cap:	0.06	0.15	0.00	0.00	0.32	0.11	0.09	0.00	0.07	0.00	0.00	0.00
Delay/Veh:	4.1	4.5	0.0	0.0	5.3	4.3	40.9	0.0	40.7	0.0	0.0	0.0
User DelAdj:	1.00	1.00	1.00	1.00	1.00	1.00	1.00	1.00	1.00	1.00	1.00	1.00
AdjDel/Veh:	4.1	4.5	0.0	0.0	5.3	4.3	40.9	0.0	40.7	0.0	0.0	0.0
LOS by Move:	A	A	A	A	A	A	D	A	D	A	A	A
HCM2kAvgQ:	1	2	0	0	6	2	1	0	1	0	0	0

****

Note: Queue reported is the number of cars per lane.

****

LLUH Campus Transformation Project
Year 2013 With Project
Evening Peak Hour

Level Of Service Computation Report
2000 HCM Operations Method (Base Volume Alternative)

Intersection #8 Anderson Street (NS) at University Avenue (EW)

Cycle (sec): 125 Critical Vol./Cap.(X): 0.219
Loss Time (sec): 4 (Y+R=3.0 sec) Average Delay (sec/veh): 7.3
Optimal Cycle: OPTIMIZED Level Of Service: A

Approach:	North Bound				South Bound				East Bound				West Bound			
Movement:	L	- T	-	R	L	- T	-	R	L	- T	-	R	L	- T	-	R
Control:	Permitted				Permitted				Permitted				Permitted			
Rights:	Include				Include				Include				Include			
Min. Green:	18	18	18		18	18	18		28	28	28		0	0	0	
Lanes:	1	0 2	0	0	0	0 2	0	1	1	0 0	0	1	0	0 0	0	0
Volume Module:																
Base Vol:	48	557	0	0	426	44	46	0	26	0	0	0				
Growth Adj:	1.00	1.00	1.00	1.00	1.00	1.00	1.00	1.00	1.00	1.00	1.00	1.00				
Initial Bse:	48	557	0	0	426	44	46	0	26	0	0	0				
User Adj:	1.00	1.00	1.00	1.00	1.00	1.00	1.00	1.00	1.00	1.00	1.00	1.00				
PHF Adj:	0.88	0.88	0.88	0.84	0.84	0.84	0.74	0.74	0.74	1.00	1.00	1.00				
PHF Volume:	55	632	0	0	506	52	62	0	35	0	0	0				
Reduct Vol:	0	0	0	0	0	0	0	0	0	0	0	0				
Reduced Vol:	55	632	0	0	506	52	62	0	35	0	0	0				
PCE Adj:	1.00	1.00	1.00	1.00	1.00	1.00	1.00	1.00	1.00	1.00	1.00	1.00				
MLF Adj:	1.00	1.00	1.00	1.00	1.00	1.00	1.00	1.00	1.00	1.00	1.00	1.00				
FinalVolume:	55	632	0	0	506	52	62	0	35	0	0	0				
Saturation Flow Module:																
Sat/Lane:	1800	1800	1800	1800	1800	1800	1800	1800	1800	1800	1800	1800				
Adjustment:	0.94	1.00	1.00	0.94	1.00	1.00	0.94	1.00	1.00	0.94	1.00	1.00				
Lanes:	1.00	2.00	0.00	0.00	2.00	1.00	1.00	0.00	1.00	0.00	0.00	0.00				
Final Sat.:	1700	3600	0	0	3600	1800	1700	0	1800	0	0	0				
Capacity Analysis Module:																
Vol/Sat:	0.03	0.18	0.00	0.00	0.14	0.03	0.04	0.00	0.02	0.00	0.00	0.00				
Crit Moves:		****					****									
Green/Cycle:	0.74	0.74	0.00	0.00	0.74	0.74	0.22	0.00	0.22	0.00	0.00	0.00				
Volume/Cap:	0.04	0.24	0.00	0.00	0.19	0.04	0.16	0.00	0.09	0.00	0.00	0.00				
Delay/Veh:	4.2	5.0	0.0	0.0	4.8	4.2	39.3	0.0	38.5	0.0	0.0	0.0				
User DelAdj:	1.00	1.00	1.00	1.00	1.00	1.00	1.00	1.00	1.00	1.00	1.00	1.00				
AdjDel/Veh:	4.2	5.0	0.0	0.0	4.8	4.2	39.3	0.0	38.5	0.0	0.0	0.0				
LOS by Move:	A	A	A	A	A	A	D	A	D	A	A	A				
HCM2kAvgQ:	1	4	0	0	3	1	2	0	1	0	0	0				

Note: Queue reported is the number of cars per lane.

LLUH Campus Transformation Project
Year 2013 With Project
Morning Peak Hour

Level Of Service Computation Report
2000 HCM 4-Way Stop Method (Base Volume Alternative)

Intersection #9 Anderson Street (NS) at Mound Street (EW)

Cycle (sec):	0	Critical Vol./Cap.(X):	0.685
Loss Time (sec):	0 (Y+R=4.0 sec)	Average Delay (sec/veh):	18.0
Optimal Cycle:	0	Level Of Service:	C

Approach:	North Bound			South Bound			East Bound			West Bound		
Movement:	L -	T -	R	L -	T -	R	L -	T -	R	L -	T -	R
Control:	Stop Sign			Stop Sign			Stop Sign			Stop Sign		
Rights:	Include			Include			Include			Include		
Min. Green:	0	0	0	0	0	0	0	0	0	0	0	0
Lanes:	1 1	0 0	1	0 0	1! 0	0	1 0	0 1	1	0 0	1! 0	0
Volume Module:												
Base Vol:	352	73	64	18	20	12	28	98	459	30	20	9
Growth Adj:	1.00	1.00	1.00	1.00	1.00	1.00	1.00	1.00	1.00	1.00	1.00	1.00
Initial Bse:	352	73	64	18	20	12	28	98	459	30	20	9
User Adj:	1.00	1.00	1.00	1.00	1.00	1.00	1.00	1.00	1.00	1.00	1.00	1.00
PHF Adj:	0.77	0.77	0.77	0.75	0.75	0.75	0.71	0.71	0.71	0.56	0.56	0.56
PHF Volume:	458	95	83	24	27	16	39	138	647	53	35	16
Reduct Vol:	0	0	0	0	0	0	0	0	0	0	0	0
Reduced Vol:	458	95	83	24	27	16	39	138	647	53	35	16
PCE Adj:	1.00	1.00	1.00	1.00	1.00	1.00	1.00	1.00	1.00	1.00	1.00	1.00
MLF Adj:	1.00	1.00	1.00	1.00	1.00	1.00	1.00	1.00	1.00	1.00	1.00	1.00
FinalVolume:	458	95	83	24	27	16	39	138	647	53	35	16
Saturation Flow Module:												
Adjustment:	1.00	1.00	1.00	1.00	1.00	1.00	1.00	1.00	1.00	1.00	1.00	1.00
Lanes:	1.66	0.34	1.00	0.36	0.40	0.24	1.00	0.35	1.65	0.51	0.34	0.15
Final Sat.:	806	169	570	167	185	111	494	202	968	242	162	73
Capacity Analysis Module:												
Vol/Sat:	0.57	0.56	0.15	0.14	0.14	0.14	0.08	0.69	0.67	0.22	0.22	0.22
Crit Moves:	****				****			****			****	
Delay/Veh:	18.9	18.4	9.9	11.6	11.6	11.6	10.5	21.0	19.9	12.2	12.2	12.2
Delay Adj:	1.00	1.00	1.00	1.00	1.00	1.00	1.00	1.00	1.00	1.00	1.00	1.00
AdjDel/Veh:	18.9	18.4	9.9	11.6	11.6	11.6	10.5	21.0	19.9	12.2	12.2	12.2
LOS by Move:	C	C	A	B	B	B	B	C	C	B	B	B
ApproachDel:		17.6			11.6			19.6			12.2	
Delay Adj:		1.00			1.00			1.00			1.00	
ApprAdjDel:		17.6			11.6			19.6			12.2	
LOS by Appr:		C			B			C			B	
AllWayAvgQ:	1.2	1.2	0.2	0.2	0.2	0.2	0.1	1.9	1.9	0.3	0.3	0.3

Note: Queue reported is the number of cars per lane.

LLUH Campus Transformation Project
Year 2013 With Project
Evening Peak Hour

Level Of Service Computation Report
2000 HCM 4-Way Stop Method (Base Volume Alternative)

Intersection #9 Anderson Street (NS) at Mound Street (EW)

Cycle (sec):	0	Critical Vol./Cap.(X):	0.632
Loss Time (sec):	0 (Y+R=4.0 sec)	Average Delay (sec/veh):	16.7
Optimal Cycle:	0	Level Of Service:	C

Approach:	North Bound			South Bound			East Bound			West Bound		
Movement:	L - T - R			L - T - R			L - T - R			L - T - R		
Control:	Stop Sign			Stop Sign			Stop Sign			Stop Sign		
Rights:	Include			Include			Include			Include		
Min. Green:	0	0	0	0	0	0	0	0	0	0	0	0
Lanes:	1 1 0 0 1			0 0 1! 0 0			1 0 0 1 1			0 0 1! 0 0		
Volume Module:												
Base Vol:	516	42	45	9	59	9	14	57	390	47	79	4
Growth Adj:	1.00	1.00	1.00	1.00	1.00	1.00	1.00	1.00	1.00	1.00	1.00	1.00
Initial Bse:	516	42	45	9	59	9	14	57	390	47	79	4
User Adj:	1.00	1.00	1.00	1.00	1.00	1.00	1.00	1.00	1.00	1.00	1.00	1.00
PHF Adj:	0.88	0.88	0.88	0.76	0.76	0.76	0.83	0.83	0.83	0.83	0.83	0.83
PHF Volume:	586	48	51	12	78	12	17	68	467	56	95	5
Reduct Vol:	0	0	0	0	0	0	0	0	0	0	0	0
Reduced Vol:	586	48	51	12	78	12	17	68	467	56	95	5
PCE Adj:	1.00	1.00	1.00	1.00	1.00	1.00	1.00	1.00	1.00	1.00	1.00	1.00
MLF Adj:	1.00	1.00	1.00	1.00	1.00	1.00	1.00	1.00	1.00	1.00	1.00	1.00
FinalVolume:	586	48	51	12	78	12	17	68	467	56	95	5
Saturation Flow Module:												
Adjustment:	1.00	1.00	1.00	1.00	1.00	1.00	1.00	1.00	1.00	1.00	1.00	1.00
Lanes:	1.85	0.15	1.00	0.12	0.76	0.12	1.00	0.26	1.74	0.36	0.61	0.03
Final Sat.:	928	76	594	54	353	54	471	139	969	170	286	14
Capacity Analysis Module:												
Vol/Sat:	0.63	0.63	0.09	0.22	0.22	0.22	0.04	0.49	0.48	0.33	0.33	0.33
Crit Moves:	****				****			****			****	
Delay/Veh:	20.8	20.5	9.2	12.3	12.3	12.3	10.4	14.9	14.5	13.7	13.7	13.7
Delay Adj:	1.00	1.00	1.00	1.00	1.00	1.00	1.00	1.00	1.00	1.00	1.00	1.00
AdjDel/Veh:	20.8	20.5	9.2	12.3	12.3	12.3	10.4	14.9	14.5	13.7	13.7	13.7
LOS by Move:	C	C	A	B	B	B	B	B	B	B	B	B
ApproachDel:		19.9			12.3			14.4			13.7	
Delay Adj:		1.00			1.00			1.00			1.00	
ApprAdjDel:		19.9			12.3			14.4			13.7	
LOS by Appr:		C			B			B			B	
AllWayAvgQ:	1.5	1.5	0.1	0.2	0.2	0.2	0.0	0.9	0.9	0.4	0.4	0.4

Note: Queue reported is the number of cars per lane.

LLUH Campus Transformation Project
Year 2013 With Project
Morning Peak Hour

Level Of Service Computation Report
2000 HCM Unsignalized Method (Base Volume Alternative)

Intersection #10 Anderson Street (NS) at Taylor Street (EW)

Average Delay (sec/veh): 0.7 Worst Case Level Of Service: A[9.1]

Approach:	North Bound					South Bound					East Bound					West Bound				
Movement:	L	-	T	-	R	L	-	T	-	R	L	-	T	-	R	L	-	T	-	R
Control:	Uncontrolled					Uncontrolled					Stop Sign					Stop Sign				
Rights:	Include					Include					Include					Include				
Lanes:	1	0	2	0	0	0	0	1	1	0	0	0	0	0	0	0	0	0	0	0
Volume Module:																				
Base Vol:	75	474		0		0	498		34		0		0		0	0		0		0
Growth Adj:	1.00	1.00		1.00		1.00	1.00		1.00		1.00		1.00		1.00	1.00		1.00		1.00
Initial Bse:	75	474		0		0	498		34		0		0		0	0		0		0
User Adj:	1.00	1.00		1.00		1.00	1.00		1.00		1.00		1.00		1.00	1.00		1.00		1.00
PHF Adj:	0.77	0.77		0.77		0.87	0.87		0.87		1.00		1.00		1.00	1.00		1.00		1.00
PHF Volume:	98	617		0		0	573		39		0		0		0	0		0		0
Reduct Vol:	0	0		0		0	0		0		0		0		0	0		0		0
FinalVolume:	98	617		0		0	573		39		0		0		0	0		0		0
Critical Gap Module:																				
Critical Gp:	4.1	xxxx		xxxxx		xxxxx	xxxx		xxxxx		xxxxx	xxxx		xxxxx		xxxxx	xxxx		xxxxx	
FollowUpTim:	2.2	xxxx		xxxxx		xxxxx	xxxx		xxxxx		xxxxx	xxxx		xxxxx		xxxxx	xxxx		xxxxx	
Capacity Module:																				
Cnflict Vol:	612	xxxx		xxxxx		xxxx	xxxx		xxxxx		xxxx	xxxx		xxxxx		xxxx	xxxx		xxxxx	
Potent Cap.:	977	xxxx		xxxxx		xxxx	xxxx		xxxxx		xxxx	xxxx		xxxxx		xxxx	xxxx		xxxxx	
Move Cap.:	977	xxxx		xxxxx		xxxx	xxxx		xxxxx		xxxx	xxxx		xxxxx		xxxx	xxxx		xxxxx	
Volume/Cap:	0.10	xxxx		xxxx		xxxx	xxxx		xxxx		xxxx	xxxx		xxxx		xxxx	xxxx		xxxx	
Level Of Service Module:																				
2Way95thQ:	0.3	xxxx		xxxxx		xxxx	xxxx		xxxxx		xxxx	xxxx		xxxxx		xxxx	xxxx		xxxxx	
Control Del:	9.1	xxxx		xxxxx		xxxxx	xxxx		xxxxx		xxxxx	xxxx		xxxxx		xxxxx	xxxx		xxxxx	
LOS by Move:	A	*		*		*	*		*		*	*		*		*	*		*	
Movement:	LT	-	LTR	-	RT	LT	-	LTR	-	RT	LT	-	LTR	-	RT	LT	-	LTR	-	RT
Shared Cap.:	xxxx	xxxx		xxxxx		xxxx	xxxx		xxxxx		xxxx	xxxx		xxxxx		xxxx	xxxx		xxxxx	
SharedQueue:	xxxxx	xxxx		xxxxx		xxxxx	xxxx		xxxxx		xxxxx	xxxx		xxxxx		xxxxx	xxxx		xxxxx	
Shrd ConDel:	xxxxx	xxxx		xxxxx		xxxxx	xxxx		xxxxx		xxxxx	xxxx		xxxxx		xxxxx	xxxx		xxxxx	
Shared LOS:	*	*		*		*	*		*		*	*		*		*	*		*	
ApproachDel:	xxxxxx					xxxxxx					xxxxxx					xxxxxx				
ApproachLOS:	*					*					*					*				

Note: Queue reported is the number of cars per lane.

LLUH Campus Transformation Project
Year 2013 With Project
Evening Peak Hour

Level Of Service Computation Report
2000 HCM Unsignalized Method (Base Volume Alternative)

Intersection #10 Anderson Street (NS) at Taylor Street (EW)

Average Delay (sec/veh): 0.1 Worst Case Level Of Service: A[8.5]

Approach:	North Bound				South Bound				East Bound				West Bound			
Movement:	L	- T	- R		L	- T	- R		L	- T	- R		L	- T	- R	
Control:	Uncontrolled				Uncontrolled				Stop Sign				Stop Sign			
Rights:	Include				Include				Include				Include			
Lanes:	1	0 2	0	0	0	0 1	1	0	0	0 0	0	0	0	0 0	0	0
Volume Module:																
Base Vol:	13	583	0	0	483	4	0	0	0	0	0	0	0	0	0	0
Growth Adj:	1.00	1.00	1.00	1.00	1.00	1.00	1.00	1.00	1.00	1.00	1.00	1.00	1.00	1.00	1.00	1.00
Initial Bse:	13	583	0	0	483	4	0	0	0	0	0	0	0	0	0	0
User Adj:	1.00	1.00	1.00	1.00	1.00	1.00	1.00	1.00	1.00	1.00	1.00	1.00	1.00	1.00	1.00	1.00
PHF Adj:	0.91	0.91	0.91	0.91	0.91	0.91	1.00	1.00	1.00	1.00	1.00	1.00	1.00	1.00	1.00	1.00
PHF Volume:	14	641	0	0	531	4	0	0	0	0	0	0	0	0	0	0
Reduct Vol:	0	0	0	0	0	0	0	0	0	0	0	0	0	0	0	0
FinalVolume:	14	641	0	0	531	4	0	0	0	0	0	0	0	0	0	0
Critical Gap Module:																
Critical Gp:	4.1	xxxx	xxxxx	xxxxx	xxxx	xxxxx	xxxxx	xxxx	xxxxx	xxxxx	xxxx	xxxxx				
FollowUpTim:	2.2	xxxx	xxxxx	xxxxx	xxxx	xxxxx	xxxxx	xxxx	xxxxx	xxxxx	xxxx	xxxxx				
Capacity Module:																
Cnflict Vol:	535	xxxx	xxxxx	xxxx	xxxx	xxxxx	xxxx	xxxx	xxxxx	xxxx	xxxx	xxxxx				
Potent Cap.:	1043	xxxx	xxxxx	xxxx	xxxx	xxxxx	xxxx	xxxx	xxxxx	xxxx	xxxx	xxxxx				
Move Cap.:	1043	xxxx	xxxxx	xxxx	xxxx	xxxxx	xxxx	xxxx	xxxxx	xxxx	xxxx	xxxxx				
Volume/Cap:	0.01	xxxx	xxxx	xxxx	xxxx	xxxx	xxxx	xxxx	xxxx	xxxx	xxxx	xxxx				
Level Of Service Module:																
2Way95thQ:	0.0	xxxx	xxxxx	xxxx	xxxx	xxxxx	xxxx	xxxx	xxxxx	xxxx	xxxx	xxxxx				
Control Del:	8.5	xxxx	xxxxx	xxxxx	xxxx	xxxxx	xxxxx	xxxx	xxxxx	xxxxx	xxxx	xxxxx				
LOS by Move:	A	*	*	*	*	*	*	*	*	*	*	*				
Movement:	LT -	LTR -	RT	LT -	LTR -	RT	LT -	LTR -	RT	LT -	LTR -	RT				
Shared Cap.:	xxxx	xxxx	xxxxx	xxxx	xxxx	xxxxx	xxxx	xxxx	xxxxx	xxxx	xxxx	xxxxx				
SharedQueue:	xxxxx	xxxx	xxxxx	xxxxx	xxxx	xxxxx	xxxxx	xxxx	xxxxx	xxxxx	xxxx	xxxxx				
Shrd ConDel:	xxxxx	xxxx	xxxxx	xxxxx	xxxx	xxxxx	xxxxx	xxxx	xxxxx	xxxxx	xxxx	xxxxx				
Shared LOS:	*	*	*	*	*	*	*	*	*	*	*	*				
ApproachDel:	xxxxxx			xxxxxx			xxxxxx			xxxxxx						
ApproachLOS:	*			*			*			*						

Note: Queue reported is the number of cars per lane.

LLUH Campus Transformation Project
Year 2013 With Project
Morning Peak Hour

Level Of Service Computation Report
2000 HCM 4-Way Stop Method (Base Volume Alternative)

Intersection #11 Anderson Street (NS) at Prospect Avenue (EW)

Cycle (sec):	0	Critical Vol./Cap.(X):	0.627
Loss Time (sec):	0 (Y+R=4.0 sec)	Average Delay (sec/veh):	15.4
Optimal Cycle:	0	Level Of Service:	C

Approach:	North Bound			South Bound			East Bound			West Bound		
Movement:	L -	T -	R	L -	T -	R	L -	T -	R	L -	T -	R
Control:	Stop Sign			Stop Sign			Stop Sign			Stop Sign		
Rights:	Include			Include			Include			Include		
Min. Green:	0	0	0	0	0	0	0	0	0	0	0	0
Lanes:	0 0	1 1	0	1 0	2 0	0	0 0	1! 0	0	0 0	1! 0	0
Volume Module:												
Base Vol:	0	442	80	107	386	0	45	23	46	41	0	98
Growth Adj:	1.00	1.00	1.00	1.00	1.00	1.00	1.00	1.00	1.00	1.00	1.00	1.00
Initial Bse:	0	442	80	107	386	0	45	23	46	41	0	98
User Adj:	1.00	1.00	1.00	1.00	1.00	1.00	1.00	1.00	1.00	1.00	1.00	1.00
PHF Adj:	0.74	0.74	0.74	0.88	0.88	0.88	0.71	0.71	0.71	0.84	0.84	0.84
PHF Volume:	0	600	109	122	439	0	64	33	65	49	0	116
Reduct Vol:	0	0	0	0	0	0	0	0	0	0	0	0
Reduced Vol:	0	600	109	122	439	0	64	33	65	49	0	116
PCE Adj:	1.00	1.00	1.00	1.00	1.00	1.00	1.00	1.00	1.00	1.00	1.00	1.00
MLF Adj:	1.00	1.00	1.00	1.00	1.00	1.00	1.00	1.00	1.00	1.00	1.00	1.00
FinalVolume:	0	600	109	122	439	0	64	33	65	49	0	116
Saturation Flow Module:												
Adjustment:	1.00	1.00	1.00	1.00	1.00	1.00	1.00	1.00	1.00	1.00	1.00	1.00
Lanes:	0.00	1.69	0.31	1.00	2.00	0.00	0.39	0.20	0.41	0.29	0.00	0.71
Final Sat.:	0	957	177	499	1073	0	198	101	202	152	0	363
Capacity Analysis Module:												
Vol/Sat:	xxxx	0.63	0.61	0.24	0.41	xxxx	0.32	0.32	0.32	0.32	xxxx	0.32
Crit Moves:		****			****			****		****		
Delay/Veh:	0.0	18.6	17.9	11.9	13.5	0.0	12.6	12.6	12.6	12.3	0.0	12.3
Delay Adj:	1.00	1.00	1.00	1.00	1.00	1.00	1.00	1.00	1.00	1.00	1.00	1.00
AdjDel/Veh:	0.0	18.6	17.9	11.9	13.5	0.0	12.6	12.6	12.6	12.3	0.0	12.3
LOS by Move:	*	C	C	B	B	*	B	B	B	B	*	B
ApproachDel:		18.5			13.2			12.6			12.3	
Delay Adj:		1.00			1.00			1.00			1.00	
ApprAdjDel:		18.5			13.2			12.6			12.3	
LOS by Appr:		C			B			B			B	
AllWayAvgQ:	0.0	1.6	1.4	0.3	0.6	0.0	0.4	0.4	0.4	0.4	0.4	0.4

Note: Queue reported is the number of cars per lane.

LLUH Campus Transformation Project
Year 2013 With Project
Evening Peak Hour

Level Of Service Computation Report
2000 HCM 4-Way Stop Method (Base Volume Alternative)

Intersection #11 Anderson Street (NS) at Prospect Avenue (EW)

Cycle (sec):	0	Critical Vol./Cap.(X):	0.595
Loss Time (sec):	0 (Y+R=4.0 sec)	Average Delay (sec/veh):	17.8
Optimal Cycle:	0	Level Of Service:	C

Approach:	North Bound			South Bound			East Bound			West Bound		
Movement:	L	T	R	L	T	R	L	T	R	L	T	R
Control:	Stop Sign			Stop Sign			Stop Sign			Stop Sign		
Rights:	Include			Include			Include			Include		
Min. Green:	0	0	0	0	0	0	0	0	0	0	0	0
Lanes:	0 0	1 1	0	1 0	2 0	0	0 0	1! 0	0	0 0	1! 0	0
Volume Module:												
Base Vol:	0	413	87	63	440	0	78	40	110	112	0	128
Growth Adj:	1.00	1.00	1.00	1.00	1.00	1.00	1.00	1.00	1.00	1.00	1.00	1.00
Initial Bse:	0	413	87	63	440	0	78	40	110	112	0	128
User Adj:	1.00	1.00	1.00	1.00	1.00	1.00	1.00	1.00	1.00	1.00	1.00	1.00
PHF Adj:	0.97	0.97	0.97	0.86	0.86	0.86	0.80	0.80	0.80	0.88	0.88	0.88
PHF Volume:	0	425	90	73	512	0	98	50	138	128	0	146
Reduct Vol:	0	0	0	0	0	0	0	0	0	0	0	0
Reduced Vol:	0	425	90	73	512	0	98	50	138	128	0	146
PCE Adj:	1.00	1.00	1.00	1.00	1.00	1.00	1.00	1.00	1.00	1.00	1.00	1.00
MLF Adj:	1.00	1.00	1.00	1.00	1.00	1.00	1.00	1.00	1.00	1.00	1.00	1.00
FinalVolume:	0	425	90	73	512	0	98	50	138	128	0	146
Saturation Flow Module:												
Adjustment:	1.00	1.00	1.00	1.00	1.00	1.00	1.00	1.00	1.00	1.00	1.00	1.00
Lanes:	0.00	1.65	0.35	1.00	2.00	0.00	0.34	0.18	0.48	0.47	0.00	0.53
Final Sat.:	0	788	169	447	957	0	164	84	231	222	0	254
Capacity Analysis Module:												
Vol/Sat:	xxxx	0.54	0.53	0.16	0.53	xxxx	0.60	0.60	0.60	0.58	xxxx	0.58
Crit Moves:		****			****				****	****		
Delay/Veh:	0.0	17.9	17.3	12.0	17.8	0.0	19.0	19.0	19.0	18.4	0.0	18.4
Delay Adj:	1.00	1.00	1.00	1.00	1.00	1.00	1.00	1.00	1.00	1.00	1.00	1.00
AdjDel/Veh:	0.0	17.9	17.3	12.0	17.8	0.0	19.0	19.0	19.0	18.4	0.0	18.4
LOS by Move:	*	C	C	B	C	*	C	C	C	C	*	C
ApproachDel:		17.8			17.1			19.0			18.4	
Delay Adj:		1.00			1.00			1.00			1.00	
ApprAdjDel:		17.8			17.1			19.0			18.4	
LOS by Appr:		C			C			C			C	
AllWayAvgQ:	0.0	1.1	1.0	0.2	1.0	0.0	1.2	1.2	1.2	1.1	1.1	1.1

Note: Queue reported is the number of cars per lane.

LLUH Campus Transformation Project
Year 2013 With Project
Morning Peak Hour - With Improvements

Level Of Service Computation Report
2000 HCM Operations Method (Base Volume Alternative)

Intersection #11 Anderson Street (NS) at Prospect Avenue (EW)

Cycle (sec): 70 Critical Vol./Cap.(X): 0.394
Loss Time (sec): 6 (Y+R=3.0 sec) Average Delay (sec/veh): 15.5
Optimal Cycle: OPTIMIZED Level Of Service: B

Approach:	North Bound			South Bound			East Bound			West Bound		
Movement:	L - T - R			L - T - R			L - T - R			L - T - R		
Control:	Protected			Protected			Permitted			Permitted		
Rights:	Include			Include			Include			Include		
Min. Green:	10	18	18	10	18	18	28	28	28	28	28	28
Lanes:	0 0 1	1 0		1 0 2	0 0		0 0 1!	0 0		0 0 1!	0 0	
Volume Module:												
Base Vol:	0	442	80	107	386	0	45	23	46	41	0	98
Growth Adj:	1.00	1.00	1.00	1.00	1.00	1.00	1.00	1.00	1.00	1.00	1.00	1.00
Initial Bse:	0	442	80	107	386	0	45	23	46	41	0	98
User Adj:	1.00	1.00	1.00	1.00	1.00	1.00	1.00	1.00	1.00	1.00	1.00	1.00
PHF Adj:	0.74	0.74	0.74	0.88	0.88	0.88	0.71	0.71	0.71	0.84	0.84	0.84
PHF Volume:	0	600	109	122	439	0	64	33	65	49	0	116
Reduct Vol:	0	0	0	0	0	0	0	0	0	0	0	0
Reduced Vol:	0	600	109	122	439	0	64	33	65	49	0	116
PCE Adj:	1.00	1.00	1.00	1.00	1.00	1.00	1.00	1.00	1.00	1.00	1.00	1.00
MLF Adj:	1.00	1.00	1.00	1.00	1.00	1.00	1.00	1.00	1.00	1.00	1.00	1.00
FinalVolume:	0	600	109	122	439	0	64	33	65	49	0	116
Saturation Flow Module:												
Sat/Lane:	1800	1800	1800	1800	1800	1800	1800	1800	1800	1800	1800	1800
Adjustment:	0.94	1.00	1.00	0.94	1.00	1.00	1.00	1.00	1.00	1.00	1.00	1.00
Lanes:	0.00	1.69	0.31	1.00	2.00	0.00	0.39	0.20	0.41	0.29	0.00	0.71
Final Sat.:	0	3048	552	1700	3600	0	711	363	726	531	0	1269
Capacity Analysis Module:												
Vol/Sat:	0.00	0.20	0.20	0.07	0.12	0.00	0.09	0.09	0.09	0.09	0.00	0.09
Crit Moves:		****		****						****		
Green/Cycle:	0.00	0.37	0.37	0.14	0.51	0.00	0.40	0.40	0.40	0.40	0.00	0.40
Volume/Cap:	0.00	0.53	0.53	0.50	0.24	0.00	0.22	0.22	0.22	0.23	0.00	0.23
Delay/Veh:	0.0	17.6	17.6	29.3	9.5	0.0	14.0	14.0	14.0	14.0	0.0	14.0
User DelAdj:	1.00	1.00	1.00	1.00	1.00	1.00	1.00	1.00	1.00	1.00	1.00	1.00
AdjDel/Veh:	0.0	17.6	17.6	29.3	9.5	0.0	14.0	14.0	14.0	14.0	0.0	14.0
LOS by Move:	A	B	B	C	A	A	B	B	B	B	A	B
HCM2kAvgQ:	0	6	6	3	3	0	2	2	2	2	0	2

Note: Queue reported is the number of cars per lane.

LLUH Campus Transformation Project
Year 2013 With Project
Evening Peak Hour - With Improvements

Level Of Service Computation Report
2000 HCM Operations Method (Base Volume Alternative)

Intersection #11 Anderson Street (NS) at Prospect Avenue (EW)

Cycle (sec): 60 Critical Vol./Cap.(X): 0.382
Loss Time (sec): 6 (Y+R=3.0 sec) Average Delay (sec/veh): 14.0
Optimal Cycle: OPTIMIZED Level Of Service: B

Approach:	North Bound			South Bound			East Bound			West Bound		
Movement:	L -	T -	R	L -	T -	R	L -	T -	R	L -	T -	R
Control:	Protected			Protected			Permitted			Permitted		
Rights:	Include			Include			Include			Include		
Min. Green:	10	18	18	10	18	18	28	28	28	28	28	28
Lanes:	0 0	1 1	0	1 0	2 0	0	0 0	1! 0	0	0 0	1! 0	0
Volume Module:												
Base Vol:	0	413	87	63	440	0	78	40	110	112	0	128
Growth Adj:	1.00	1.00	1.00	1.00	1.00	1.00	1.00	1.00	1.00	1.00	1.00	1.00
Initial Bse:	0	413	87	63	440	0	78	40	110	112	0	128
User Adj:	1.00	1.00	1.00	1.00	1.00	1.00	1.00	1.00	1.00	1.00	1.00	1.00
PHF Adj:	0.97	0.97	0.97	0.86	0.86	0.86	0.80	0.80	0.80	0.88	0.88	0.88
PHF Volume:	0	425	90	73	512	0	98	50	138	128	0	146
Reduct Vol:	0	0	0	0	0	0	0	0	0	0	0	0
Reduced Vol:	0	425	90	73	512	0	98	50	138	128	0	146
PCE Adj:	1.00	1.00	1.00	1.00	1.00	1.00	1.00	1.00	1.00	1.00	1.00	1.00
MLF Adj:	1.00	1.00	1.00	1.00	1.00	1.00	1.00	1.00	1.00	1.00	1.00	1.00
FinalVolume:	0	425	90	73	512	0	98	50	138	128	0	146
Saturation Flow Module:												
Sat/Lane:	1800	1800	1800	1800	1800	1800	1800	1800	1800	1800	1800	1800
Adjustment:	0.94	1.00	1.00	0.94	1.00	1.00	1.00	1.00	1.00	1.00	1.00	1.00
Lanes:	0.00	1.65	0.35	1.00	2.00	0.00	0.34	0.18	0.48	0.47	0.00	0.53
Final Sat.:	0	2974	626	1700	3600	0	616	316	868	840	0	960
Capacity Analysis Module:												
Vol/Sat:	0.00	0.14	0.14	0.04	0.14	0.00	0.16	0.16	0.16	0.15	0.00	0.15
Crit Moves:		****		****				****				
Green/Cycle:	0.00	0.29	0.29	0.16	0.45	0.00	0.45	0.45	0.45	0.45	0.00	0.45
Volume/Cap:	0.00	0.49	0.49	0.27	0.31	0.00	0.35	0.35	0.35	0.34	0.00	0.34
Delay/Veh:	0.0	18.6	18.6	23.3	11.0	0.0	11.3	11.3	11.3	11.2	0.0	11.2
User DelAdj:	1.00	1.00	1.00	1.00	1.00	1.00	1.00	1.00	1.00	1.00	1.00	1.00
AdjDel/Veh:	0.0	18.6	18.6	23.3	11.0	0.0	11.3	11.3	11.3	11.2	0.0	11.2
LOS by Move:	A	B	B	C	B	A	B	B	B	B	A	B
HCM2kAvgQ:	0	5	5	2	3	0	4	4	4	4	0	4

Note: Queue reported is the number of cars per lane.

LLUH Campus Transformation Project
Year 2013 With Project
Morning Peak Hour

Level Of Service Computation Report
2000 HCM Unsignalized Method (Base Volume Alternative)

Intersection #12 Anderson Street (NS) at Main Project Access (EW)

Average Delay (sec/veh): 2.4 Worst Case Level Of Service: B[13.7]

Approach:	North Bound				South Bound				East Bound				West Bound			
Movement:	L	- T	- R		L	- T	- R		L	- T	- R		L	- T	- R	
Control:	Uncontrolled				Uncontrolled				Stop Sign				Stop Sign			
Rights:	Include				Include				Include				Include			
Lanes:	1	0 2	0	0	0	0 1	1	0	1	0 0	0	1	0	0 0	0	0
Volume Module:																
Base Vol:	128	423	0	0	347	108			43	0	69		0	0	0	
Growth Adj:	1.00	1.00	1.00	1.00	1.00	1.00			1.00	1.00	1.00		1.00	1.00	1.00	
Initial Bse:	128	423	0	0	347	108			43	0	69		0	0	0	
User Adj:	1.00	1.00	1.00	1.00	1.00	1.00			1.00	1.00	1.00		1.00	1.00	1.00	
PHF Adj:	0.73	0.73	0.73	0.90	0.90	0.90			0.85	0.85	0.85		1.00	1.00	1.00	
PHF Volume:	175	578	0	0	386	120			50	0	81		0	0	0	
Reduct Vol:	0	0	0	0	0	0			0	0	0		0	0	0	
FinalVolume:	175	578	0	0	386	120			50	0	81		0	0	0	
Critical Gap Module:																
Critical Gp:	4.1	xxxx	xxxxx	xxxxx	xxxx	xxxxx			6.8	xxxx	6.9		xxxxx	xxxx	xxxxx	
FollowUpTim:	2.2	xxxx	xxxxx	xxxxx	xxxx	xxxxx			3.5	xxxx	3.3		xxxxx	xxxx	xxxxx	
Capacity Module:																
Cnflict Vol:	506	xxxx	xxxxx	xxxx	xxxx	xxxxx			1085	xxxx	253		xxxx	xxxx	xxxxx	
Potent Cap.:	1069	xxxx	xxxxx	xxxx	xxxx	xxxxx			215	xxxx	753		xxxx	xxxx	xxxxx	
Move Cap.:	1069	xxxx	xxxxx	xxxx	xxxx	xxxxx			188	xxxx	753		xxxx	xxxx	xxxxx	
Total Cap:	xxxx	xxxx	xxxxx	xxxx	xxxx	xxxxx			306	225	xxxxx		200	199	xxxxx	
Volume/Cap:	0.16	xxxx	xxxx	xxxx	xxxx	xxxx			0.16	xxxx	0.11		xxxx	xxxx	xxxx	
Level Of Service Module:																
2Way95thQ:	0.6	xxxx	xxxxx	xxxx	xxxx	xxxxx			0.6	xxxx	0.4		xxxx	xxxx	xxxxx	
Control Del:	9.0	xxxx	xxxxx	xxxxx	xxxx	xxxxx			19.1	xxxx	10.4		xxxxx	xxxx	xxxxx	
LOS by Move:	A	*	*	*	*	*			C	*	B		*	*	*	
Movement:	LT -	LTR -	RT	LT -	LTR -	RT			LT -	LTR -	RT		LT -	LTR -	RT	
Shared Cap.:	xxxx	xxxx	xxxxx	xxxx	xxxx	xxxxx			xxxx	xxxx	xxxxx		xxxx	xxxx	xxxxx	
SharedQueue:	xxxxx	xxxx	xxxxx	xxxxx	xxxx	xxxxx			xxxxx	xxxx	xxxxx		xxxxx	xxxx	xxxxx	
Shrd ConDel:	xxxxx	xxxx	xxxxx	xxxxx	xxxx	xxxxx			xxxxx	xxxx	xxxxx		xxxxx	xxxx	xxxxx	
Shared LOS:	*	*	*	*	*	*			*	*	*		*	*	*	
ApproachDel:	xxxxxx			xxxxxx					13.7				xxxxxx			
ApproachLOS:	*			*					B				*			

Note: Queue reported is the number of cars per lane.

LLUH Campus Transformation Project
Year 2013 With Project
Evening Peak Hour

Level Of Service Computation Report
2000 HCM Unsignalized Method (Base Volume Alternative)

Intersection #12 Anderson Street (NS) at Main Project Access (EW)

Average Delay (sec/veh): 3.2 Worst Case Level Of Service: C[15.7]

Approach:	North Bound				South Bound				East Bound				West Bound			
Movement:	L	- T	- R		L	- T	- R		L	- T	- R		L	- T	- R	
Control:	Uncontrolled				Uncontrolled				Stop Sign				Stop Sign			
Rights:	Include				Include				Include				Include			
Lanes:	1 0	2 0	0		0 0	1 1	0		1 0	0 0	1		0 0	0 0	0	
Volume Module:																
Base Vol:	86	358	0		0	514	82		102	0	90		0	0	0	
Growth Adj:	1.00	1.00	1.00		1.00	1.00	1.00		1.00	1.00	1.00		1.00	1.00	1.00	
Initial Bse:	86	358	0		0	514	82		102	0	90		0	0	0	
User Adj:	1.00	1.00	1.00		1.00	1.00	1.00		1.00	1.00	1.00		1.00	1.00	1.00	
PHF Adj:	0.90	0.90	0.90		0.94	0.94	0.94		0.89	0.89	0.89		1.00	1.00	1.00	
PHF Volume:	95	396	0		0	547	87		115	0	102		0	0	0	
Reduct Vol:	0	0	0		0	0	0		0	0	0		0	0	0	
FinalVolume:	95	396	0		0	547	87		115	0	102		0	0	0	
Critical Gap Module:																
Critical Gp:	4.1	xxxx	xxxxx	xxxxx	xxxx	xxxxx			6.8	xxxx	6.9	xxxxx	xxxx	xxxxx		
FollowUpTim:	2.2	xxxx	xxxxx	xxxxx	xxxx	xxxxx			3.5	xxxx	3.3	xxxxx	xxxx	xxxxx		
Capacity Module:																
Cnflict Vol:	634	xxxx	xxxxx	xxxx	xxxx	xxxxx			978	xxxx	317	xxxx	xxxx	xxxxx		
Potent Cap.:	959	xxxx	xxxxx	xxxx	xxxx	xxxxx			251	xxxx	685	xxxx	xxxx	xxxxx		
Move Cap.:	959	xxxx	xxxxx	xxxx	xxxx	xxxxx			232	xxxx	685	xxxx	xxxx	xxxxx		
Total Cap:	xxxx	xxxx	xxxxx	xxxx	xxxx	xxxxx			359	295	xxxxx	301	262	xxxxx		
Volume/Cap:	0.10	xxxx	xxxx	xxxx	xxxx	xxxx			0.32	xxxx	0.15	xxxx	xxxx	xxxx		
Level Of Service Module:																
2Way95thQ:	0.3	xxxx	xxxxx	xxxx	xxxx	xxxxx			1.4	xxxx	0.5	xxxx	xxxx	xxxxx		
Control Del:	9.2	xxxx	xxxxx	xxxxx	xxxx	xxxxx			19.7	xxxx	11.2	xxxxx	xxxx	xxxxx		
LOS by Move:	A	*	*	*	*	*			C	*	B	*	*	*		
Movement:	LT -	LTR -	RT	LT -	LTR -	RT			LT -	LTR -	RT	LT -	LTR -	RT		
Shared Cap.:	xxxx	xxxx	xxxxx	xxxx	xxxx	xxxxx			xxxx	xxxx	xxxxx	xxxx	xxxx	xxxxx		
SharedQueue:	xxxxx	xxxx	xxxxx	xxxxx	xxxx	xxxxx			xxxxx	xxxx	xxxxx	xxxxx	xxxx	xxxxx		
Shrd ConDel:	xxxxx	xxxx	xxxxx	xxxxx	xxxx	xxxxx			xxxxx	xxxx	xxxxx	xxxxx	xxxx	xxxxx		
Shared LOS:	*	*	*	*	*	*			*	*	*	*	*	*		
ApproachDel:	xxxxxx			xxxxxx					15.7			xxxxxx				
ApproachLOS:	*			*					C			*				

Note: Queue reported is the number of cars per lane.

LLUH Campus Transformation Project
Year 2013 With Project
Morning Peak Hour

Level Of Service Computation Report
2000 HCM Unsignalized Method (Base Volume Alternative)

Intersection #13 Anderson Street (NS) at Starr Street (EW)

Average Delay (sec/veh): 0.4 Worst Case Level Of Service: B[12.6]

Approach:	North Bound			South Bound			East Bound			West Bound		
Movement:	L - T - R			L - T - R			L - T - R			L - T - R		
Control:	Uncontrolled			Uncontrolled			Stop Sign			Stop Sign		
Rights:	Include			Include			Include			Include		
Lanes:	0 0 1 1 0			1 0 2 0 0			0 0 0 0 0			0 0 1! 0 0		
Volume Module:												
Base Vol:	0	562	15	5	423	0	0	0	0	3	0	17
Growth Adj:	1.00	1.00	1.00	1.00	1.00	1.00	1.00	1.00	1.00	1.00	1.00	1.00
Initial Bse:	0	562	15	5	423	0	0	0	0	3	0	17
User Adj:	1.00	1.00	1.00	1.00	1.00	1.00	1.00	1.00	1.00	1.00	1.00	1.00
PHF Adj:	0.77	0.77	0.77	0.91	0.91	0.91	1.00	1.00	1.00	0.54	0.54	0.54
PHF Volume:	0	734	20	5	465	0	0	0	0	6	0	32
Reduct Vol:	0	0	0	0	0	0	0	0	0	0	0	0
FinalVolume:	0	734	20	5	465	0	0	0	0	6	0	32
Critical Gap Module:												
Critical Gp:	xxxxx	xxxx	xxxxx	4.1	xxxx	xxxxx	xxxxx	xxxx	xxxxx	6.8	6.5	6.9
FollowUpTim:	xxxxx	xxxx	xxxxx	2.2	xxxx	xxxxx	xxxxx	xxxx	xxxxx	3.5	4.0	3.3
Capacity Module:												
Cnflict Vol:	xxxx	xxxx	xxxxx	753	xxxx	xxxxx	xxxx	xxxx	xxxxx	987	1219	377
Potent Cap.:	xxxx	xxxx	xxxxx	866	xxxx	xxxxx	xxxx	xxxx	xxxxx	248	182	627
Move Cap.:	xxxx	xxxx	xxxxx	866	xxxx	xxxxx	xxxx	xxxx	xxxxx	247	181	627
Volume/Cap:	xxxx	xxxx	xxxx	0.01	xxxx	xxxx	xxxx	xxxx	xxxx	0.02	0.00	0.05
Level Of Service Module:												
2Way95thQ:	xxxx	xxxx	xxxxx	0.0	xxxx	xxxxx	xxxx	xxxx	xxxxx	xxxx	xxxx	xxxxx
Control Del:	xxxxx	xxxx	xxxxx	9.2	xxxx	xxxxx	xxxxx	xxxx	xxxxx	xxxxx	xxxx	xxxxx
LOS by Move:	*	*	*	A	*	*	*	*	*	*	*	*
Movement:	LT - LTR - RT			LT - LTR - RT			LT - LTR - RT			LT - LTR - RT		
Shared Cap.:	xxxx	xxxx	xxxxx	xxxx	xxxx	xxxxx	xxxx	xxxx	xxxxx	xxxx	509	xxxxx
SharedQueue:	xxxxx	xxxx	xxxxx	xxxxx	xxxx	xxxxx	xxxxx	xxxx	xxxxx	xxxxx	0.2	xxxxx
Shrd ConDel:	xxxxx	xxxx	xxxxx	xxxxx	xxxx	xxxxx	xxxxx	xxxx	xxxxx	xxxxx	12.6	xxxxx
Shared LOS:	*	*	*	*	*	*	*	*	*	*	B	*
ApproachDel:	xxxxxx			xxxxxx			xxxxxx			12.6		
ApproachLOS:	*			*			*			B		

Note: Queue reported is the number of cars per lane.

LLUH Campus Transformation Project
Year 2013 With Project
Evening Peak Hour

Level Of Service Computation Report
2000 HCM Unsignalized Method (Base Volume Alternative)

Intersection #13 Anderson Street (NS) at Starr Street (EW)

Average Delay (sec/veh): 0.8 Worst Case Level Of Service: B[13.1]

Approach:	North Bound			South Bound			East Bound			West Bound		
Movement:	L - T - R			L - T - R			L - T - R			L - T - R		
Control:	Uncontrolled			Uncontrolled			Stop Sign			Stop Sign		
Rights:	Include			Include			Include			Include		
Lanes:	0 0 1	1 0		1 0 2	0 0		0 0 0	0 0		0 0 1!	0 0	
Volume Module:												
Base Vol:	0	437	9	16	571	0	0	0	0	14	0	27
Growth Adj:	1.00	1.00	1.00	1.00	1.00	1.00	1.00	1.00	1.00	1.00	1.00	1.00
Initial Bse:	0	437	9	16	571	0	0	0	0	14	0	27
User Adj:	1.00	1.00	1.00	1.00	1.00	1.00	1.00	1.00	1.00	1.00	1.00	1.00
PHF Adj:	0.91	0.91	0.91	0.92	0.92	0.92	1.00	1.00	1.00	0.67	0.67	0.67
PHF Volume:	0	480	10	17	617	0	0	0	0	21	0	40
Reduct Vol:	0	0	0	0	0	0	0	0	0	0	0	0
FinalVolume:	0	480	10	17	617	0	0	0	0	21	0	40
Critical Gap Module:												
Critical Gp:	xxxxx	xxxx	xxxxx	4.1	xxxx	xxxxx	xxxxx	xxxx	xxxxx	6.8	6.5	6.9
FollowUpTim:	xxxxx	xxxx	xxxxx	2.2	xxxx	xxxxx	xxxxx	xxxx	xxxxx	3.5	4.0	3.3
Capacity Module:												
Cnflict Vol:	xxxx	xxxx	xxxxx	489	xxxx	xxxxx	xxxx	xxxx	xxxxx	828	1137	245
Potent Cap.:	xxxx	xxxx	xxxxx	1084	xxxx	xxxxx	xxxx	xxxx	xxxxx	314	204	762
Move Cap.:	xxxx	xxxx	xxxxx	1084	xxxx	xxxxx	xxxx	xxxx	xxxxx	310	200	762
Volume/Cap:	xxxx	xxxx	xxxx	0.02	xxxx	xxxx	xxxx	xxxx	xxxx	0.07	0.00	0.05
Level Of Service Module:												
2Way95thQ:	xxxx	xxxx	xxxxx	0.0	xxxx	xxxxx	xxxx	xxxx	xxxxx	xxxx	xxxx	xxxxx
Control Del:	xxxxx	xxxx	xxxxx	8.4	xxxx	xxxxx	xxxxx	xxxx	xxxxx	xxxxx	xxxx	xxxxx
LOS by Move:	*	*	*	A	*	*	*	*	*	*	*	*
Movement:	LT - LTR - RT			LT - LTR - RT			LT - LTR - RT			LT - LTR - RT		
Shared Cap.:	xxxx	xxxx	xxxxx	xxxx	xxxx	xxxxx	xxxx	xxxx	xxxxx	xxxx	508	xxxxx
SharedQueue:	xxxxx	xxxx	xxxxx	xxxxx	xxxx	xxxxx	xxxxx	xxxx	xxxxx	xxxxx	0.4	xxxxx
Shrd ConDel:	xxxxx	xxxx	xxxxx	xxxxx	xxxx	xxxxx	xxxxx	xxxx	xxxxx	xxxxx	13.1	xxxxx
Shared LOS:	*	*	*	*	*	*	*	*	*	*	B	*
ApproachDel:	xxxxxx			xxxxxx			xxxxxx			13.1		
ApproachLOS:	*			*			*			B		

Note: Queue reported is the number of cars per lane.

LLUH Campus Transformation Project
Year 2013 With Project
Morning Peak Hour

Level Of Service Computation Report
2000 HCM Operations Method (Base Volume Alternative)

Intersection #14 Anderson Street (NS) at Barton Road (EW)

Cycle (sec): 125 Critical Vol./Cap.(X): 0.896
Loss Time (sec): 8 (Y+R=3.0 sec) Average Delay (sec/veh): 42.4
Optimal Cycle: OPTIMIZED Level Of Service: D

Approach:	North Bound			South Bound			East Bound			West Bound		
Movement:	L - T - R			L - T - R			L - T - R			L - T - R		
Control:	Prot+Permit			Prot+Permit			Protected			Protected		
Rights:	Include			Include			Include			Include		
Min. Green:	28	28	28	28	28	28	10	21	21	10	28	28
Lanes:	1 0	0 1	0	1 0	1 0	1	2 0	2 0	1	1 0	2 0	1
Volume Module:												
Base Vol:	83	143	34	116	174	116	256	830	118	147	756	116
Growth Adj:	1.00	1.00	1.00	1.00	1.00	1.00	1.00	1.00	1.00	1.00	1.00	1.00
Initial Bse:	83	143	34	116	174	116	256	830	118	147	756	116
User Adj:	1.00	1.00	1.00	1.00	1.00	1.00	1.00	1.00	1.00	1.00	1.00	1.00
PHF Adj:	0.74	0.74	0.74	0.91	0.91	0.91	0.82	0.82	0.82	0.80	0.80	0.80
PHF Volume:	113	195	46	127	191	127	313	1015	144	185	950	146
Reduct Vol:	0	0	0	0	0	0	0	0	0	0	0	0
Reduced Vol:	113	195	46	127	191	127	313	1015	144	185	950	146
PCE Adj:	1.00	1.00	1.00	1.00	1.00	1.00	1.00	1.00	1.00	1.00	1.00	1.00
MLF Adj:	1.00	1.00	1.00	1.00	1.00	1.00	1.00	1.00	1.00	1.00	1.00	1.00
FinalVolume:	113	195	46	127	191	127	313	1015	144	185	950	146
Saturation Flow Module:												
Sat/Lane:	1800	1800	1800	1800	1800	1800	1800	1800	1800	1800	1800	1800
Adjustment:	0.94	1.00	1.00	0.94	1.00	1.00	0.89	1.00	1.00	0.94	1.00	1.00
Lanes:	1.00	0.81	0.19	1.00	1.00	1.00	2.00	2.00	1.00	1.00	2.00	1.00
Final Sat.:	1700	1454	346	1700	1800	1800	3200	3600	1800	1700	3600	1800
Capacity Analysis Module:												
Vol/Sat:	0.00	0.13	0.13	0.00	0.11	0.07	0.10	0.28	0.08	0.11	0.26	0.08
Crit Moves:		****		****				****		****		
Green/Cycle:	0.22	0.22	0.22	0.22	0.22	0.22	0.13	0.35	0.35	0.14	0.36	0.36
Volume/Cap:	0.30	0.60	0.60	0.33	0.47	0.32	0.74	0.80	0.23	0.80	0.74	0.23
Delay/Veh:	40.8	45.9	45.9	41.2	43.0	40.9	59.1	40.2	28.7	70.1	37.6	28.4
User DelAdj:	1.00	1.00	1.00	1.00	1.00	1.00	1.00	1.00	1.00	1.00	1.00	1.00
AdjDel/Veh:	40.8	45.9	45.9	41.2	43.0	40.9	59.1	40.2	28.7	70.1	37.6	28.4
LOS by Move:	D	D	D	D	D	D	E	D	C	E	D	C
HCM2kAvgQ:	4	9	9	4	7	4	8	19	4	9	17	4

Note: Queue reported is the number of cars per lane.

LLUH Campus Transformation Project
Year 2013 With Project
Evening Peak Hour

Level Of Service Computation Report
2000 HCM Operations Method (Base Volume Alternative)

Intersection #14 Anderson Street (NS) at Barton Road (EW)

Cycle (sec): 115 Critical Vol./Cap.(X): 0.911
Loss Time (sec): 8 (Y+R=3.0 sec) Average Delay (sec/veh): 38.5
Optimal Cycle: OPTIMIZED Level Of Service: D

Approach:	North Bound			South Bound			East Bound			West Bound		
Movement:	L - T - R			L - T - R			L - T - R			L - T - R		
Control:	Prot+Permit			Prot+Permit			Protected			Protected		
Rights:	Include			Include			Include			Include		
Min. Green:	28	28	28	28	28	28	10	21	21	10	28	28
Lanes:	1 0	0 1	0	1 0	1 0	1	2 0	2 0	1	1 0	2 0	1
Volume Module:												
Base Vol:	190	132	82	202	121	271	160	882	54	55	853	142
Growth Adj:	1.00	1.00	1.00	1.00	1.00	1.00	1.00	1.00	1.00	1.00	1.00	1.00
Initial Bse:	190	132	82	202	121	271	160	882	54	55	853	142
User Adj:	1.00	1.00	1.00	1.00	1.00	1.00	1.00	1.00	1.00	1.00	1.00	1.00
PHF Adj:	0.73	0.73	0.73	0.90	0.90	0.90	0.90	0.90	0.90	0.96	0.96	0.96
PHF Volume:	262	182	113	223	134	300	178	984	60	57	888	148
Reduct Vol:	0	0	0	0	0	0	0	0	0	0	0	0
Reduced Vol:	262	182	113	223	134	300	178	984	60	57	888	148
PCE Adj:	1.00	1.00	1.00	1.00	1.00	1.00	1.00	1.00	1.00	1.00	1.00	1.00
MLF Adj:	1.00	1.00	1.00	1.00	1.00	1.00	1.00	1.00	1.00	1.00	1.00	1.00
FinalVolume:	262	182	113	223	134	300	178	984	60	57	888	148
Saturation Flow Module:												
Sat/Lane:	1800	1800	1800	1800	1800	1800	1800	1800	1800	1800	1800	1800
Adjustment:	0.94	1.00	1.00	0.94	1.00	1.00	0.89	1.00	1.00	0.94	1.00	1.00
Lanes:	1.00	0.62	0.38	1.00	1.00	1.00	2.00	2.00	1.00	1.00	2.00	1.00
Final Sat.:	1700	1110	690	1700	1800	1800	3200	3600	1800	1700	3600	1800
Capacity Analysis Module:												
Vol/Sat:	0.00	0.16	0.16	0.00	0.07	0.17	0.06	0.27	0.03	0.03	0.25	0.08
Crit Moves:	****					****		****		****		
Green/Cycle:	0.24	0.24	0.24	0.24	0.24	0.24	0.12	0.36	0.36	0.09	0.33	0.33
Volume/Cap:	0.63	0.67	0.67	0.54	0.31	0.68	0.48	0.77	0.09	0.39	0.75	0.25
Delay/Veh:	42.1	43.4	43.4	39.3	35.9	43.9	48.6	35.6	24.7	51.3	37.2	28.5
User DelAdj:	1.00	1.00	1.00	1.00	1.00	1.00	1.00	1.00	1.00	1.00	1.00	1.00
AdjDel/Veh:	42.1	43.4	43.4	39.3	35.9	43.9	48.6	35.6	24.7	51.3	37.2	28.5
LOS by Move:	D	D	D	D	D	D	D	D	C	D	D	C
HCM2kAvgQ:	10	10	10	8	4	11	4	17	1	2	15	4

Note: Queue reported is the number of cars per lane.

Opening Year (2023) Without Project

LLUH Campus Transformation Project
Year 2023 Without Project
Morning Peak Hour

Level Of Service Computation Report
2000 HCM 4-Way Stop Method (Base Volume Alternative)

****

Intersection #1 Campus Street (NS) at Stewart Street (EW)

****

Cycle (sec):	0	Critical Vol./Cap.(X):	0.997
Loss Time (sec):	0 (Y+R=4.0 sec)	Average Delay (sec/veh):	37.7
Optimal Cycle:	0	Level Of Service:	E

****

Approach:	North Bound			South Bound			East Bound			West Bound		
Movement:	L -	T -	R	L -	T -	R	L -	T -	R	L -	T -	R
Control:	Stop Sign			Stop Sign			Stop Sign			Stop Sign		
Rights:	Include			Include			Include			Include		
Min. Green:	0	0	0	0	0	0	0	0	0	0	0	0
Lanes:	0 1	0 0	1	0 0	1! 0	0	0 0	1! 0	0	0 1	0 0	1
Volume Module:												
Base Vol:	14	271	239	12	37	2	76	150	44	332	54	297
Growth Adj:	1.00	1.00	1.00	1.00	1.00	1.00	1.00	1.00	1.00	1.00	1.00	1.00
Initial Bse:	14	271	239	12	37	2	76	150	44	332	54	297
User Adj:	1.00	1.00	1.00	1.00	1.00	1.00	1.00	1.00	1.00	1.00	1.00	1.00
PHF Adj:	0.79	0.79	0.79	0.85	0.85	0.85	0.68	0.68	0.68	0.85	0.85	0.85
PHF Volume:	18	344	303	14	44	2	112	221	65	393	64	351
Reduct Vol:	0	0	0	0	0	0	0	0	0	0	0	0
Reduced Vol:	18	344	303	14	44	2	112	221	65	393	64	351
PCE Adj:	1.00	1.00	1.00	1.00	1.00	1.00	1.00	1.00	1.00	1.00	1.00	1.00
MLF Adj:	1.00	1.00	1.00	1.00	1.00	1.00	1.00	1.00	1.00	1.00	1.00	1.00
FinalVolume:	18	344	303	14	44	2	112	221	65	393	64	351
Saturation Flow Module:												
Adjustment:	1.00	1.00	1.00	1.00	1.00	1.00	1.00	1.00	1.00	1.00	1.00	1.00
Lanes:	0.05	0.95	1.00	0.23	0.73	0.04	0.28	0.56	0.16	0.86	0.14	1.00
Final Sat.:	23	441	513	87	269	15	133	263	77	394	64	533
Capacity Analysis Module:												
Vol/Sat:	0.78	0.78	0.59	0.16	0.16	0.16	0.84	0.84	0.84	1.00	1.00	0.66
Crit Moves:		****			****		****			****		
Delay/Veh:	32.3	32.3	19.2	13.8	13.8	13.8	38.5	38.5	38.5	69.2	69.2	21.4
Delay Adj:	1.00	1.00	1.00	1.00	1.00	1.00	1.00	1.00	1.00	1.00	1.00	1.00
AdjDel/Veh:	32.3	32.3	19.2	13.8	13.8	13.8	38.5	38.5	38.5	69.2	69.2	21.4
LOS by Move:	D	D	C	B	B	B	E	E	E	F	F	C
ApproachDel:		26.3			13.8			38.5			48.4	
Delay Adj:		1.00			1.00			1.00			1.00	
ApprAdjDel:		26.3			13.8			38.5			48.4	
LOS by Appr:		D			B			E			E	
AllWayAvgQ:	2.8	2.8	1.4	0.2	0.2	0.2	3.7	3.7	3.7	7.5	7.5	1.8

****

Note: Queue reported is the number of cars per lane.

****

LLUH Campus Transformation Project
Year 2023 Without Project
Evening Peak Hour

Level Of Service Computation Report
2000 HCM 4-Way Stop Method (Base Volume Alternative)

****

Intersection #1 Campus Street (NS) at Stewart Street (EW)

****

Cycle (sec):	0	Critical Vol./Cap.(X):	0.914
Loss Time (sec):	0 (Y+R=4.0 sec)	Average Delay (sec/veh):	30.8
Optimal Cycle:	0	Level Of Service:	D

****

Approach:	North Bound			South Bound			East Bound			West Bound		
Movement:	L -	T -	R	L -	T -	R	L -	T -	R	L -	T -	R
Control:	Stop Sign			Stop Sign			Stop Sign			Stop Sign		
Rights:	Include			Include			Include			Include		
Min. Green:	0	0	0	0	0	0	0	0	0	0	0	0
Lanes:	0 1	0 0	1	0 0	1! 0	0	0 0	1! 0	0	0 1	0 0	1
Volume Module:												
Base Vol:	37	92	245	129	239	32	10	50	40	201	141	103
Growth Adj:	1.00	1.00	1.00	1.00	1.00	1.00	1.00	1.00	1.00	1.00	1.00	1.00
Initial Bse:	37	92	245	129	239	32	10	50	40	201	141	103
User Adj:	1.00	1.00	1.00	1.00	1.00	1.00	1.00	1.00	1.00	1.00	1.00	1.00
PHF Adj:	0.94	0.94	0.94	0.91	0.91	0.91	0.66	0.66	0.66	0.89	0.89	0.89
PHF Volume:	39	97	260	141	261	35	15	75	60	226	158	116
Reduct Vol:	0	0	0	0	0	0	0	0	0	0	0	0
Reduced Vol:	39	97	260	141	261	35	15	75	60	226	158	116
PCE Adj:	1.00	1.00	1.00	1.00	1.00	1.00	1.00	1.00	1.00	1.00	1.00	1.00
MLF Adj:	1.00	1.00	1.00	1.00	1.00	1.00	1.00	1.00	1.00	1.00	1.00	1.00
FinalVolume:	39	97	260	141	261	35	15	75	60	226	158	116
Saturation Flow Module:												
Adjustment:	1.00	1.00	1.00	1.00	1.00	1.00	1.00	1.00	1.00	1.00	1.00	1.00
Lanes:	0.29	0.71	1.00	0.32	0.60	0.08	0.10	0.50	0.40	0.59	0.41	1.00
Final Sat.:	126	314	492	154	286	38	40	202	162	268	188	521
Capacity Analysis Module:												
Vol/Sat:	0.31	0.31	0.53	0.91	0.91	0.91	0.37	0.37	0.37	0.84	0.84	0.22
Crit Moves:			****			****		****			****	
Delay/Veh:	13.8	13.8	16.6	48.4	48.4	48.4	15.6	15.6	15.6	38.2	38.2	11.4
Delay Adj:	1.00	1.00	1.00	1.00	1.00	1.00	1.00	1.00	1.00	1.00	1.00	1.00
AdjDel/Veh:	13.8	13.8	16.6	48.4	48.4	48.4	15.6	15.6	15.6	38.2	38.2	11.4
LOS by Move:	B	B	C	E	E	E	C	C	C	E	E	B
ApproachDel:	15.6			48.4			15.6			32.0		
Delay Adj:	1.00			1.00			1.00			1.00		
ApprAdjDel:	15.6			48.4			15.6			32.0		
LOS by Appr:	C			E			C			D		
AllWayAvgQ:	0.4	0.4	0.9	5.0	5.0	5.0	0.5	0.5	0.5	3.5	3.5	0.3

****

Note: Queue reported is the number of cars per lane.

****

LLUH Campus Transformation Project
Year 2023 Without Project
Morning Peak Hour

Level Of Service Computation Report
2000 HCM 4-Way Stop Method (Base Volume Alternative)

Intersection #2 Campus Street (NS) at University Avenue (EW)

Cycle (sec):	0	Critical Vol./Cap.(X):	0.847
Loss Time (sec):	0 (Y+R=4.0 sec)	Average Delay (sec/veh):	29.6
Optimal Cycle:	0	Level Of Service:	D

Approach:	North Bound			South Bound			East Bound			West Bound		
Movement:	L -	T -	R	L -	T -	R	L -	T -	R	L -	T -	R
Control:	Stop Sign			Stop Sign			Stop Sign			Stop Sign		
Rights:	Include			Include			Include			Include		
Min. Green:	0	0	0	0	0	0	0	0	0	0	0	0
Lanes:	0 1	0 0	0	0 0	0 1	0	0 0	1! 0	0	0 0	0 0	0
Volume Module:												
Base Vol:	60	307	0	0	194	177	248	0	146	0	0	0
Growth Adj:	1.00	1.00	1.00	1.00	1.00	1.00	1.00	1.00	1.00	1.00	1.00	1.00
Initial Bse:	60	307	0	0	194	177	248	0	146	0	0	0
User Adj:	1.00	1.00	1.00	1.00	1.00	1.00	1.00	1.00	1.00	1.00	1.00	1.00
PHF Adj:	0.76	0.76	0.76	0.84	0.84	0.84	0.82	0.82	0.82	1.00	1.00	1.00
PHF Volume:	79	403	0	0	232	212	301	0	177	0	0	0
Reduct Vol:	0	0	0	0	0	0	0	0	0	0	0	0
Reduced Vol:	79	403	0	0	232	212	301	0	177	0	0	0
PCE Adj:	1.00	1.00	1.00	1.00	1.00	1.00	1.00	1.00	1.00	1.00	1.00	1.00
MLF Adj:	1.00	1.00	1.00	1.00	1.00	1.00	1.00	1.00	1.00	1.00	1.00	1.00
FinalVolume:	79	403	0	0	232	212	301	0	177	0	0	0
Saturation Flow Module:												
Adjustment:	1.00	1.00	1.00	1.00	1.00	1.00	1.00	1.00	1.00	1.00	1.00	1.00
Lanes:	0.16	0.84	0.00	0.00	0.52	0.48	0.63	0.00	0.37	0.00	0.00	0.00
Final Sat.:	93	476	0	0	306	279	359	0	211	0	0	0
Capacity Analysis Module:												
Vol/Sat:	0.85	0.85	xxxx	xxxx	0.76	0.76	0.84	xxxx	0.84	xxxx	xxxx	xxxx
Crit Moves:	****				****		****					
Delay/Veh:	32.9	32.9	0.0	0.0	24.1	24.1	31.4	0.0	31.4	0.0	0.0	0.0
Delay Adj:	1.00	1.00	1.00	1.00	1.00	1.00	1.00	1.00	1.00	1.00	1.00	1.00
AdjDel/Veh:	32.9	32.9	0.0	0.0	24.1	24.1	31.4	0.0	31.4	0.0	0.0	0.0
LOS by Move:	D	D	*	*	C	C	D	*	D	*	*	*
ApproachDel:	32.9			24.1			31.4			xxxxxx		
Delay Adj:	1.00			1.00			1.00			xxxxx		
ApprAdjDel:	32.9			24.1			31.4			xxxxxx		
LOS by Appr:	D			C			D			*		
AllWayAvgQ:	3.7	3.7	3.7	2.5	2.5	2.5	3.5	3.5	3.5	0.0	0.0	0.0

Note: Queue reported is the number of cars per lane.

LLUH Campus Transformation Project
Year 2023 Without Project
Evening Peak Hour

Level Of Service Computation Report
2000 HCM 4-Way Stop Method (Base Volume Alternative)

Intersection #2 Campus Street (NS) at University Avenue (EW)

Cycle (sec):	0	Critical Vol./Cap.(X):	0.691
Loss Time (sec):	0 (Y+R=4.0 sec)	Average Delay (sec/veh):	15.0
Optimal Cycle:	0	Level Of Service:	B

Approach:	North Bound			South Bound			East Bound			West Bound		
Movement:	L -	T -	R	L -	T -	R	L -	T -	R	L -	T -	R
Control:	Stop Sign			Stop Sign			Stop Sign			Stop Sign		
Rights:	Include			Include			Include			Include		
Min. Green:	0	0	0	0	0	0	0	0	0	0	0	0
Lanes:	0 1	0 0	0	0 0	0 1	0	0 0	1! 0	0	1 0	0 0	0
Volume Module:												
Base Vol:	105	195	0	0	245	215	133	0	65	3	0	0
Growth Adj:	1.00	1.00	1.00	1.00	1.00	1.00	1.00	1.00	1.00	1.00	1.00	1.00
Initial Bse:	105	195	0	0	245	215	133	0	65	3	0	0
User Adj:	1.00	1.00	1.00	1.00	1.00	1.00	1.00	1.00	1.00	1.00	1.00	1.00
PHF Adj:	0.89	0.89	0.89	0.91	0.91	0.91	0.82	0.82	0.82	0.25	0.25	0.25
PHF Volume:	118	220	0	0	268	235	162	0	79	12	0	0
Reduct Vol:	0	0	0	0	0	0	0	0	0	0	0	0
Reduced Vol:	118	220	0	0	268	235	162	0	79	12	0	0
PCE Adj:	1.00	1.00	1.00	1.00	1.00	1.00	1.00	1.00	1.00	1.00	1.00	1.00
MLF Adj:	1.00	1.00	1.00	1.00	1.00	1.00	1.00	1.00	1.00	1.00	1.00	1.00
FinalVolume:	118	220	0	0	268	235	162	0	79	12	0	0
Saturation Flow Module:												
Adjustment:	1.00	1.00	1.00	1.00	1.00	1.00	1.00	1.00	1.00	1.00	1.00	1.00
Lanes:	0.35	0.65	0.00	0.00	0.53	0.47	0.67	0.00	0.33	1.00	0.00	0.00
Final Sat.:	227	422	0	0	388	341	386	0	189	454	0	0
Capacity Analysis Module:												
Vol/Sat:	0.52	0.52	xxxx	xxxx	0.69	0.69	0.42	xxxx	0.42	0.03	xxxx	xxxx
Crit Moves:		****				****	****			****		
Delay/Veh:	13.6	13.6	0.0	0.0	17.3	17.3	12.4	0.0	12.4	9.7	0.0	0.0
Delay Adj:	1.00	1.00	1.00	1.00	1.00	1.00	1.00	1.00	1.00	1.00	1.00	1.00
AdjDel/Veh:	13.6	13.6	0.0	0.0	17.3	17.3	12.4	0.0	12.4	9.7	0.0	0.0
LOS by Move:	B	B	*	*	C	C	B	*	B	A	*	*
ApproachDel:		13.6			17.3			12.4			9.7	
Delay Adj:		1.00			1.00			1.00			1.00	
ApprAdjDel:		13.6			17.3			12.4			9.7	
LOS by Appr:		B			C			B			A	
AllWayAvgQ:	0.9	0.9	0.9	1.9	1.9	1.9	0.6	0.6	0.6	0.0	0.0	0.0

Note: Queue reported is the number of cars per lane.

LLUH Campus Transformation Project
Year 2023 Without Project
Morning Peak Hour

Level Of Service Computation Report
2000 HCM Operations Method (Base Volume Alternative)

Intersection #3 Campus Street (NS) at Prospect Avenue (EW)

Cycle (sec): 110 Critical Vol./Cap.(X): 0.339
Loss Time (sec): 4 (Y+R=3.0 sec) Average Delay (sec/veh): 5.9
Optimal Cycle: OPTIMIZED Level Of Service: A

Approach:	North Bound			South Bound			East Bound			West Bound		
Movement:	L	T	R	L	T	R	L	T	R	L	T	R
Control:	Permitted			Permitted			Permitted			Permitted		
Rights:	Include			Include			Include			Include		
Min. Green:	18	18	18	18	18	18	21	21	21	0	0	0
Lanes:	1 0	1 0	0	0 1	0 0	1	0 0	1! 0	0	0 0	0 0	0
Volume Module:												
Base Vol:	176	422	0	10	237	44	10	0	46	0	0	0
Growth Adj:	1.00	1.00	1.00	1.00	1.00	1.00	1.00	1.00	1.00	1.00	1.00	1.00
Initial Bse:	176	422	0	10	237	44	10	0	46	0	0	0
User Adj:	1.00	1.00	1.00	1.00	1.00	1.00	1.00	1.00	1.00	1.00	1.00	1.00
PHF Adj:	0.82	0.82	0.82	0.89	0.89	0.89	0.76	0.76	0.76	1.00	1.00	1.00
PHF Volume:	215	515	0	11	265	49	13	0	60	0	0	0
Reduct Vol:	0	0	0	0	0	0	0	0	0	0	0	0
Reduced Vol:	215	515	0	11	265	49	13	0	60	0	0	0
PCE Adj:	1.00	1.00	1.00	1.00	1.00	1.00	1.00	1.00	1.00	1.00	1.00	1.00
MLF Adj:	1.00	1.00	1.00	1.00	1.00	1.00	1.00	1.00	1.00	1.00	1.00	1.00
FinalVolume:	215	515	0	11	265	49	13	0	60	0	0	0
Saturation Flow Module:												
Sat/Lane:	1800	1800	1800	1800	1800	1800	1800	1800	1800	1800	1800	1800
Adjustment:	0.94	1.00	1.00	1.00	1.00	1.00	1.00	1.00	1.00	0.94	1.00	1.00
Lanes:	1.00	1.00	0.00	0.04	0.96	1.00	0.18	0.00	0.82	0.00	0.00	0.00
Final Sat.:	1700	1800	0	73	1727	1800	321	0	1479	0	0	0
Capacity Analysis Module:												
Vol/Sat:	0.13	0.29	0.00	0.15	0.15	0.03	0.04	0.00	0.04	0.00	0.00	0.00
Crit Moves:		****					****					
Green/Cycle:	0.77	0.77	0.00	0.77	0.77	0.77	0.19	0.00	0.19	0.00	0.00	0.00
Volume/Cap:	0.16	0.37	0.00	0.20	0.20	0.04	0.21	0.00	0.21	0.00	0.00	0.00
Delay/Veh:	3.3	4.1	0.0	3.4	3.4	2.9	37.8	0.0	37.8	0.0	0.0	0.0
User DelAdj:	1.00	1.00	1.00	1.00	1.00	1.00	1.00	1.00	1.00	1.00	1.00	1.00
AdjDel/Veh:	3.3	4.1	0.0	3.4	3.4	2.9	37.8	0.0	37.8	0.0	0.0	0.0
LOS by Move:	A	A	A	A	A	A	D	A	D	A	A	A
HCM2kAvgQ:	2	6	0	3	3	0	2	0	2	0	0	0

Note: Queue reported is the number of cars per lane.

LLUH Campus Transformation Project
Year 2023 Without Project
Evening Peak Hour

Level Of Service Computation Report
2000 HCM Operations Method (Base Volume Alternative)

Intersection #3 Campus Street (NS) at Prospect Avenue (EW)

Cycle (sec): 60 Critical Vol./Cap.(X): 0.289
Loss Time (sec): 4 (Y+R=3.0 sec) Average Delay (sec/veh): 9.0
Optimal Cycle: OPTIMIZED Level Of Service: A

Approach:	North Bound			South Bound			East Bound			West Bound		
Movement:	L	T	R	L	T	R	L	T	R	L	T	R
Control:	Permitted			Permitted			Permitted			Permitted		
Rights:	Include			Include			Include			Include		
Min. Green:	18	18	18	18	18	18	21	21	21	0	0	0
Lanes:	1 0	0 1	0	0 0	1 0	1	0 0	1! 0	0	0 0	0 0	0
Volume Module:												
Base Vol:	26	248	3	0	274	24	12	0	136	0	0	0
Growth Adj:	1.00	1.00	1.00	1.00	1.00	1.00	1.00	1.00	1.00	1.00	1.00	1.00
Initial Bse:	26	248	3	0	274	24	12	0	136	0	0	0
User Adj:	1.00	1.00	1.00	1.00	1.00	1.00	1.00	1.00	1.00	1.00	1.00	1.00
PHF Adj:	0.92	0.92	0.92	0.99	0.99	0.99	0.71	0.71	0.71	1.00	1.00	1.00
PHF Volume:	28	269	3	0	278	24	17	0	191	0	0	0
Reduct Vol:	0	0	0	0	0	0	0	0	0	0	0	0
Reduced Vol:	28	269	3	0	278	24	17	0	191	0	0	0
PCE Adj:	1.00	1.00	1.00	1.00	1.00	1.00	1.00	1.00	1.00	1.00	1.00	1.00
MLF Adj:	1.00	1.00	1.00	1.00	1.00	1.00	1.00	1.00	1.00	1.00	1.00	1.00
FinalVolume:	28	269	3	0	278	24	17	0	191	0	0	0
Saturation Flow Module:												
Sat/Lane:	1800	1800	1800	1800	1800	1800	1800	1800	1800	1800	1800	1800
Adjustment:	0.94	1.00	1.00	0.94	1.00	1.00	1.00	1.00	1.00	0.94	1.00	1.00
Lanes:	1.00	0.99	0.01	0.00	1.00	1.00	0.08	0.00	0.92	0.00	0.00	0.00
Final Sat.:	1700	1778	22	0	1800	1800	146	0	1654	0	0	0
Capacity Analysis Module:												
Vol/Sat:	0.02	0.15	0.15	0.00	0.15	0.01	0.12	0.00	0.12	0.00	0.00	0.00
Crit Moves:					****		****					
Green/Cycle:	0.53	0.53	0.53	0.00	0.53	0.53	0.40	0.00	0.40	0.00	0.00	0.00
Volume/Cap:	0.03	0.28	0.28	0.00	0.29	0.03	0.29	0.00	0.29	0.00	0.00	0.00
Delay/Veh:	6.7	7.9	7.9	0.0	7.9	6.6	12.4	0.0	12.4	0.0	0.0	0.0
User DelAdj:	1.00	1.00	1.00	1.00	1.00	1.00	1.00	1.00	1.00	1.00	1.00	1.00
AdjDel/Veh:	6.7	7.9	7.9	0.0	7.9	6.6	12.4	0.0	12.4	0.0	0.0	0.0
LOS by Move:	A	A	A	A	A	A	B	A	B	A	A	A
HCM2kAvgQ:	0	3	3	0	3	0	3	0	3	0	0	0

Note: Queue reported is the number of cars per lane.

LLUH Campus Transformation Project
Year 2023 Without Project
Morning Peak Hour

Level Of Service Computation Report
2000 HCM Unsignalized Method (Base Volume Alternative)

****

Intersection #4 Campus Street (NS) at San Juan Street (EW)

****

Average Delay (sec/veh): 55.3 Worst Case Level Of Service: F[219.2]

****

Approach:	North Bound					South Bound					East Bound					West Bound				
Movement:	L	-	T	-	R	L	-	T	-	R	L	-	T	-	R	L	-	T	-	R
Control:	Uncontrolled					Uncontrolled					Stop Sign					Stop Sign				
Rights:	Include					Include					Include					Include				
Lanes:	0	1	0	0	0	0	0	1	1	0	0	0	1!	0	0	0	0	0	0	0
Volume Module:																				
Base Vol:	49	780		0		0	165		22		180		0	167		0		0		0
Growth Adj:	1.00	1.00		1.00		1.00	1.00		1.00		1.00		1.00	1.00		1.00		1.00		1.00
Initial Bse:	49	780		0		0	165		22		180		0	167		0		0		0
User Adj:	1.00	1.00		1.00		1.00	1.00		1.00		1.00		1.00	1.00		1.00		1.00		1.00
PHF Adj:	0.85	0.85		0.85		0.77	0.77		0.77		0.85		0.85	0.85		1.00		1.00		1.00
PHF Volume:	58	918		0		0	215		29		212		0	196		0		0		0
Reduct Vol:	0	0		0		0	0		0		0		0	0		0		0		0
FinalVolume:	58	918		0		0	215		29		212		0	196		0		0		0
Critical Gap Module:																				
Critical Gp:	4.1	xxxx	xxxxx	xxxxx	xxxx	xxxxx					6.4		6.5	6.2		xxxxx	xxxx	xxxxx		
FollowUpTim:	2.2	xxxx	xxxxx	xxxxx	xxxx	xxxxx					3.5		4.0	3.3		xxxxx	xxxx	xxxxx		
Capacity Module:																				
Cnflict Vol:	243	xxxx	xxxxx	xxxx	xxxx	xxxxx					1262		1262	122		xxxx	xxxx	xxxxx		
Potent Cap.:	1335	xxxx	xxxxx	xxxx	xxxx	xxxxx					189		171	935		xxxx	xxxx	xxxxx		
Move Cap.:	1335	xxxx	xxxxx	xxxx	xxxx	xxxxx					183		164	935		xxxx	xxxx	xxxxx		
Volume/Cap:	0.04	xxxx	xxxx	xxxx	xxxx	xxxx					1.16		0.00	0.21		xxxx	xxxx	xxxx		
Level Of Service Module:																				
2Way95thQ:	0.1	xxxx	xxxxx	xxxx	xxxx	xxxxx					xxxx	xxxx	xxxxx	xxxx	xxxx	xxxxx				
Control Del:	7.8	xxxx	xxxxx	xxxxx	xxxx	xxxxx					xxxxx	xxxx	xxxxx	xxxxx	xxxx	xxxxx				
LOS by Move:	A	*	*	*	*	*					*	*	*	*	*	*				
Movement:	LT	-	LTR	-	RT	LT	-	LTR	-	RT	LT	-	LTR	-	RT	LT	-	LTR	-	RT
Shared Cap.:	xxxx	xxxx	xxxxx	xxxx	xxxx	xxxxx					xxxx		299	xxxxx		xxxx	xxxx	xxxxx		
SharedQueue:	0.1	xxxx	xxxxx	xxxxx	xxxx	xxxxx					xxxxx		21.0	xxxxx		xxxxx	xxxx	xxxxx		
Shrd ConDel:	7.8	xxxx	xxxxx	xxxxx	xxxx	xxxxx					xxxxx		219	xxxxx		xxxxx	xxxx	xxxxx		
Shared LOS:	A	*	*	*	*	*					*		F	*		*	*	*		
ApproachDel:	xxxxxx			xxxxxx							219.2					xxxxxx				
ApproachLOS:	*			*							F					*				

****

Note: Queue reported is the number of cars per lane.

****

LLUH Campus Transformation Project
Year 2023 Without Project
Evening Peak Hour

Level Of Service Computation Report
2000 HCM Unsignalized Method (Base Volume Alternative)

Intersection #4 Campus Street (NS) at San Juan Street (EW)

Average Delay (sec/veh): 5.7 Worst Case Level Of Service: D[34.6]

Approach:	North Bound				South Bound				East Bound				West Bound			
Movement:	L	- T	- R		L	- T	- R		L	- T	- R		L	- T	- R	
Control:	Uncontrolled				Uncontrolled				Stop Sign				Stop Sign			
Rights:	Include				Include				Include				Include			
Lanes:	0	1	0	0 0	0	0	1	1 0	0	0	1!	0 0	0	0	0	0 0
Volume Module:																
Base Vol:	240	245	0	0	588	160			16	0	82		0	0		0
Growth Adj:	1.00	1.00	1.00	1.00	1.00	1.00			1.00	1.00	1.00		1.00	1.00		1.00
Initial Bse:	240	245	0	0	588	160			16	0	82		0	0		0
User Adj:	1.00	1.00	1.00	1.00	1.00	1.00			1.00	1.00	1.00		1.00	1.00		1.00
PHF Adj:	0.88	0.88	0.88	0.83	0.83	0.83			0.58	0.58	0.58		1.00	1.00		1.00
PHF Volume:	273	278	0	0	711	193			27	0	141		0	0		0
Reduct Vol:	0	0	0	0	0	0			0	0	0		0	0		0
FinalVolume:	273	278	0	0	711	193			27	0	141		0	0		0
Critical Gap Module:																
Critical Gp:	4.1	xxxx	xxxxx	xxxxx	xxxx	xxxxx			6.4	6.5	6.2		xxxxx	xxxx		xxxxx
FollowUpTim:	2.2	xxxx	xxxxx	xxxxx	xxxx	xxxxx			3.5	4.0	3.3		xxxxx	xxxx		xxxxx
Capacity Module:																
Cnflict Vol:	904	xxxx	xxxxx	xxxx	xxxx	xxxxx			1631	1631	452		xxxx	xxxx		xxxxx
Potent Cap.:	761	xxxx	xxxxx	xxxx	xxxx	xxxxx			113	103	612		xxxx	xxxx		xxxxx
Move Cap.:	761	xxxx	xxxxx	xxxx	xxxx	xxxxx			76	59	612		xxxx	xxxx		xxxxx
Volume/Cap:	0.36	xxxx	xxxx	xxxx	xxxx	xxxx			0.36	0.00	0.23		xxxx	xxxx		xxxx
Level Of Service Module:																
2Way95thQ:	1.6	xxxx	xxxxx	xxxx	xxxx	xxxxx			xxxx	xxxx	xxxxx		xxxx	xxxx		xxxxx
Control Del:	12.4	xxxx	xxxxx	xxxxx	xxxx	xxxxx			xxxxx	xxxx	xxxxx		xxxxx	xxxx		xxxxx
LOS by Move:	B	*	*	*	*	*			*	*	*		*	*		*
Movement:	LT -	LTR -	RT	LT -	LTR -	RT			LT -	LTR -	RT		LT -	LTR -	RT	
Shared Cap.:	xxxx	xxxx	xxxxx	xxxx	xxxx	xxxxx			xxxx	284	xxxxx		xxxx	xxxx		xxxxx
SharedQueue:	1.6	xxxx	xxxxx	xxxxx	xxxx	xxxxx			xxxxx	3.5	xxxxx		xxxxx	xxxx		xxxxx
Shrd ConDel:	12.4	xxxx	xxxxx	xxxxx	xxxx	xxxxx			xxxxx	34.6	xxxxx		xxxxx	xxxx		xxxxx
Shared LOS:	B	*	*	*	*	*			*	D	*		*	*		*
ApproachDel:	xxxxxx			xxxxxx						34.6			xxxxxx			
ApproachLOS:		*			*					D				*		

Note: Queue reported is the number of cars per lane.

LLUH Campus Transformation Project
Year 2023 Without Project
Morning Peak Hour

Level Of Service Computation Report
2000 HCM Operations Method (Base Volume Alternative)

****

Intersection #5 Campus Street (NS) at Barton Road (EW)

****

Cycle (sec): 130 Critical Vol./Cap.(X): 0.991
Loss Time (sec): 8 (Y+R=3.0 sec) Average Delay (sec/veh): 50.0
Optimal Cycle: OPTIMIZED Level Of Service: D

****

Approach:	North Bound			South Bound			East Bound			West Bound		
Movement:	L - T - R			L - T - R			L - T - R			L - T - R		
Control:	Prot+Permit			Prot+Permit			Protected			Protected		
Rights:	Include			Include			Include			Include		
Min. Green:	28	28	28	28	28	28	10	18	18	10	21	21
Lanes:	1 0	0 1	0	1 0	1 0	1	1 0	2 0	1	1 0	2 0	1
Volume Module:												
Base Vol:	160	181	17	188	92	79	189	1316	94	44	501	441
Growth Adj:	1.00	1.00	1.00	1.00	1.00	1.00	1.00	1.00	1.00	1.00	1.00	1.00
Initial Bse:	160	181	17	188	92	79	189	1316	94	44	501	441
User Adj:	1.00	1.00	1.00	1.00	1.00	1.00	1.00	1.00	1.00	1.00	1.00	1.00
PHF Adj:	0.76	0.76	0.76	0.79	0.79	0.79	0.86	0.86	0.86	0.78	0.78	0.78
PHF Volume:	211	238	22	239	117	101	219	1522	109	56	642	565
Reduct Vol:	0	0	0	0	0	0	0	0	0	0	0	0
Reduced Vol:	211	238	22	239	117	101	219	1522	109	56	642	565
PCE Adj:	1.00	1.00	1.00	1.00	1.00	1.00	1.00	1.00	1.00	1.00	1.00	1.00
MLF Adj:	1.00	1.00	1.00	1.00	1.00	1.00	1.00	1.00	1.00	1.00	1.00	1.00
FinalVolume:	211	238	22	239	117	101	219	1522	109	56	642	565
Saturation Flow Module:												
Sat/Lane:	1800	1800	1800	1800	1800	1800	1800	1800	1800	1800	1800	1800
Adjustment:	0.94	1.00	1.00	0.94	1.00	1.00	0.94	1.00	1.00	0.94	1.00	1.00
Lanes:	1.00	0.91	0.09	1.00	1.00	1.00	1.00	2.00	1.00	1.00	2.00	1.00
Final Sat.:	1700	1645	155	1700	1800	1800	1700	3600	1800	1700	3600	1800
Capacity Analysis Module:												
Vol/Sat:	0.00	0.14	0.14	0.00	0.07	0.06	0.13	0.42	0.06	0.03	0.18	0.31
Crit Moves:		****		****				****		****		
Green/Cycle:	0.22	0.22	0.22	0.22	0.22	0.22	0.15	0.43	0.43	0.08	0.36	0.36
Volume/Cap:	0.58	0.67	0.67	0.65	0.30	0.26	0.87	0.98	0.14	0.43	0.50	0.87
Delay/Veh:	47.9	51.4	51.4	50.8	43.2	42.7	80.8	55.0	22.5	59.6	32.7	51.1
User DelAdj:	1.00	1.00	1.00	1.00	1.00	1.00	1.00	1.00	1.00	1.00	1.00	1.00
AdjDel/Veh:	47.9	51.4	51.4	50.8	43.2	42.7	80.8	55.0	22.5	59.6	32.7	51.1
LOS by Move:	D	D	D	D	D	D	F	D	C	E	C	D
HCM2kAvgQ:	8	10	10	10	4	3	12	36	3	3	10	24

****

Note: Queue reported is the number of cars per lane.

****

LLUH Campus Transformation Project
Year 2023 Without Project
Evening Peak Hour

Level Of Service Computation Report
2000 HCM Operations Method (Base Volume Alternative)

****

Intersection #5 Campus Street (NS) at Barton Road (EW)

****

Cycle (sec): 130 Critical Vol./Cap.(X): 0.975
Loss Time (sec): 8 (Y+R=3.0 sec) Average Delay (sec/veh): 50.0
Optimal Cycle: OPTIMIZED Level Of Service: D

****

Approach:	North Bound			South Bound			East Bound			West Bound		
Movement:	L - T - R			L - T - R			L - T - R			L - T - R		
Control:	Prot+Permit			Prot+Permit			Protected			Protected		
Rights:	Include			Include			Include			Include		
Min. Green:	28	28	28	28	28	28	10	18	18	10	21	21
Lanes:	1 0	0 1	0	1 0	1 0	1	1 0	2 0	1	1 0	2 0	1
Volume Module:												
Base Vol:	144	80	27	357	139	122	84	616	93	58	1269	256
Growth Adj:	1.00	1.00	1.00	1.00	1.00	1.00	1.00	1.00	1.00	1.00	1.00	1.00
Initial Bse:	144	80	27	357	139	122	84	616	93	58	1269	256
User Adj:	1.00	1.00	1.00	1.00	1.00	1.00	1.00	1.00	1.00	1.00	1.00	1.00
PHF Adj:	0.70	0.70	0.70	0.86	0.86	0.86	0.89	0.89	0.89	0.93	0.93	0.93
PHF Volume:	207	115	39	413	161	141	94	691	104	62	1367	276
Reduct Vol:	0	0	0	0	0	0	0	0	0	0	0	0
Reduced Vol:	207	115	39	413	161	141	94	691	104	62	1367	276
PCE Adj:	1.00	1.00	1.00	1.00	1.00	1.00	1.00	1.00	1.00	1.00	1.00	1.00
MLF Adj:	1.00	1.00	1.00	1.00	1.00	1.00	1.00	1.00	1.00	1.00	1.00	1.00
FinalVolume:	207	115	39	413	161	141	94	691	104	63	1367	276
Saturation Flow Module:												
Sat/Lane:	1800	1800	1800	1800	1800	1800	1800	1800	1800	1800	1800	1800
Adjustment:	0.94	1.00	1.00	0.94	1.00	1.00	0.94	1.00	1.00	0.94	1.00	1.00
Lanes:	1.00	0.75	0.25	1.00	1.00	1.00	1.00	2.00	1.00	1.00	2.00	1.00
Final Sat.:	1700	1346	454	1700	1800	1800	1700	3600	1800	1700	3600	1800
Capacity Analysis Module:												
Vol/Sat:	0.00	0.09	0.09	0.00	0.09	0.08	0.06	0.19	0.06	0.04	0.38	0.15
Crit Moves:		****		****			****				****	
Green/Cycle:	0.23	0.22	0.22	0.25	0.23	0.23	0.08	0.34	0.34	0.13	0.39	0.39
Volume/Cap:	0.52	0.40	0.40	0.96	0.38	0.34	0.72	0.57	0.17	0.27	0.96	0.39
Delay/Veh:	44.7	44.4	44.4	82.1	42.5	41.9	76.4	36.1	30.5	51.2	54.5	28.5
User DelAdj:	1.00	1.00	1.00	1.00	1.00	1.00	1.00	1.00	1.00	1.00	1.00	1.00
AdjDel/Veh:	44.7	44.4	44.4	82.1	42.5	41.9	76.4	36.1	30.5	51.2	54.5	28.5
LOS by Move:	D	D	D	F	D	D	E	D	C	D	D	C
HCM2kAvgQ:	8	5	5	22	5	5	5	12	3	3	32	8

****

Note: Queue reported is the number of cars per lane.

****

LLUH Campus Transformation Project
Year 2023 Without Project
Morning Peak Hour

Level Of Service Computation Report
2000 HCM Unsignalized Method (Base Volume Alternative)

****

Intersection #6 Parkland Street (NS) at Stewart Street (EW)

****

Average Delay (sec/veh): 0.8 Worst Case Level Of Service: B[11.5]

****

Approach:	North Bound			South Bound			East Bound			West Bound		
Movement:	L - T - R			L - T - R			L - T - R			L - T - R		
Control:	Stop Sign			Stop Sign			Uncontrolled			Uncontrolled		
Rights:	Include			Include			Include			Include		
Lanes:	0 0 0 0 0			0 0 1! 0 0			0 1 0 0 0			0 0 0 1 0		
Volume Module:												
Base Vol:	0	0	0	6	0	16	33	394	0	0	207	11
Growth Adj:	1.00	1.00	1.00	1.00	1.00	1.00	1.00	1.00	1.00	1.00	1.00	1.00
Initial Bse:	0	0	0	6	0	16	33	394	0	0	207	11
User Adj:	1.00	1.00	1.00	1.00	1.00	1.00	1.00	1.00	1.00	1.00	1.00	1.00
PHF Adj:	1.00	1.00	1.00	0.79	0.79	0.79	0.80	0.80	0.80	0.85	0.85	0.85
PHF Volume:	0	0	0	8	0	20	41	493	0	0	244	13
Reduct Vol:	0	0	0	0	0	0	0	0	0	0	0	0
FinalVolume:	0	0	0	8	0	20	41	493	0	0	244	13
Critical Gap Module:												
Critical Gp:	xxxxx	xxxx	xxxxx	6.4	6.5	6.2	4.1	xxxx	xxxxx	xxxxx	xxxx	xxxxx
FollowUpTim:	xxxxx	xxxx	xxxxx	3.5	4.0	3.3	2.2	xxxx	xxxxx	xxxxx	xxxx	xxxxx
Capacity Module:												
Cnflict Vol:	xxxx	xxxx	xxxxx	826	826	251	257	xxxx	xxxxx	xxxx	xxxx	xxxxx
Potent Cap.:	xxxx	xxxx	xxxxx	344	309	793	1319	xxxx	xxxxx	xxxx	xxxx	xxxxx
Move Cap.:	xxxx	xxxx	xxxxx	336	300	793	1319	xxxx	xxxxx	xxxx	xxxx	xxxxx
Volume/Cap:	xxxx	xxxx	xxxx	0.02	0.00	0.03	0.03	xxxx	xxxx	xxxx	xxxx	xxxx
Level Of Service Module:												
2Way95thQ:	xxxx	xxxx	xxxxx	xxxx	xxxx	xxxxx	0.1	xxxx	xxxxx	xxxx	xxxx	xxxxx
Control Del:	xxxxx	xxxx	xxxxx	xxxxx	xxxx	xxxxx	7.8	xxxx	xxxxx	xxxxx	xxxx	xxxxx
LOS by Move:	*	*	*	*	*	*	A	*	*	*	*	*
Movement:	LT - LTR - RT			LT - LTR - RT			LT - LTR - RT			LT - LTR - RT		
Shared Cap.:	xxxx	xxxx	xxxxx	xxxx	578	xxxxx	xxxx	xxxx	xxxxx	xxxx	xxxx	xxxxx
SharedQueue:	xxxxx	xxxx	xxxxx	xxxxx	0.2	xxxxx	0.1	xxxx	xxxxx	xxxxx	xxxx	xxxxx
Shrd ConDel:	xxxxx	xxxx	xxxxx	xxxxx	11.5	xxxxx	7.8	xxxx	xxxxx	xxxxx	xxxx	xxxxx
Shared LOS:	*	*	*	*	B	*	A	*	*	*	*	*
ApproachDel:	xxxxxx			11.5			xxxxxx			xxxxxx		
ApproachLOS:	*			B			*			*		

****

Note: Queue reported is the number of cars per lane.

****

LLUH Campus Transformation Project
Year 2023 Without Project
Evening Peak Hour

Level Of Service Computation Report
2000 HCM Unsignalized Method (Base Volume Alternative)

****

Intersection #6 Parkland Street (NS) at Stewart Street (EW)

****

Average Delay (sec/veh): 0.7 Worst Case Level Of Service: B[13.9]

****

Approach:	North Bound			South Bound			East Bound			West Bound		
Movement:	L - T - R			L - T - R			L - T - R			L - T - R		
Control:	Stop Sign			Stop Sign			Uncontrolled			Uncontrolled		
Rights:	Include			Include			Include			Include		
Lanes:	0 0 0 0 0			0 0 1! 0 0			0 1 0 0 0			0 0 0 1 0		
Volume Module:												
Base Vol:	0	0	0	12	0	18	13	278	0	0	392	9
Growth Adj:	1.00	1.00	1.00	1.00	1.00	1.00	1.00	1.00	1.00	1.00	1.00	1.00
Initial Bse:	0	0	0	12	0	18	13	278	0	0	392	9
User Adj:	1.00	1.00	1.00	1.00	1.00	1.00	1.00	1.00	1.00	1.00	1.00	1.00
PHF Adj:	1.00	1.00	1.00	0.84	0.84	0.84	0.81	0.81	0.81	0.81	0.81	0.81
PHF Volume:	0	0	0	14	0	21	16	341	0	0	486	11
Reduct Vol:	0	0	0	0	0	0	0	0	0	0	0	0
FinalVolume:	0	0	0	14	0	21	16	341	0	0	486	11
Critical Gap Module:												
Critical Gp:	xxxxx	xxxx	xxxxx	6.4	6.5	6.2	4.1	xxxx	xxxxx	xxxxx	xxxx	xxxxx
FollowUpTim:	xxxxx	xxxx	xxxxx	3.5	4.0	3.3	2.2	xxxx	xxxxx	xxxxx	xxxx	xxxxx
Capacity Module:												
Cnflict Vol:	xxxx	xxxx	xxxxx	865	865	492	498	xxxx	xxxxx	xxxx	xxxx	xxxxx
Potent Cap.:	xxxx	xxxx	xxxxx	327	294	581	1077	xxxx	xxxxx	xxxx	xxxx	xxxxx
Move Cap.:	xxxx	xxxx	xxxxx	323	289	581	1077	xxxx	xxxxx	xxxx	xxxx	xxxxx
Volume/Cap:	xxxx	xxxx	xxxx	0.04	0.00	0.04	0.01	xxxx	xxxx	xxxx	xxxx	xxxx
Level Of Service Module:												
2Way95thQ:	xxxx	xxxx	xxxxx	xxxx	xxxx	xxxxx	0.0	xxxx	xxxxx	xxxx	xxxx	xxxxx
Control Del:	xxxxx	xxxx	xxxxx	xxxxx	xxxx	xxxxx	8.4	xxxx	xxxxx	xxxxx	xxxx	xxxxx
LOS by Move:	*	*	*	*	*	*	A	*	*	*	*	*
Movement:	LT - LTR - RT			LT - LTR - RT			LT - LTR - RT			LT - LTR - RT		
Shared Cap.:	xxxx	xxxx	xxxxx	xxxx	440	xxxxx	xxxx	xxxx	xxxxx	xxxx	xxxx	xxxxx
SharedQueue:	xxxxx	xxxx	xxxxx	xxxxx	0.3	xxxxx	0.0	xxxx	xxxxx	xxxxx	xxxx	xxxxx
Shrd ConDel:	xxxxx	xxxx	xxxxx	xxxxx	13.9	xxxxx	8.4	xxxx	xxxxx	xxxxx	xxxx	xxxxx
Shared LOS:	*	*	*	*	B	*	A	*	*	*	*	*
ApproachDel:	xxxxxx			13.9			xxxxxx			xxxxxx		
ApproachLOS:	*			B			*			*		

****

Note: Queue reported is the number of cars per lane.

****

LLUH Campus Transformation Project
Year 2023 Without Project
Morning Peak Hour

Level Of Service Computation Report
2000 HCM Operations Method (Base Volume Alternative)

****

Intersection #7 Anderson Street (NS) at Stewart Street (EW)

****

Cycle (sec): 90 Critical Vol./Cap.(X): 0.594
Loss Time (sec): 6 (Y+R=3.0 sec) Average Delay (sec/veh): 22.5
Optimal Cycle: OPTIMIZED Level Of Service: C

****

Approach:	North Bound			South Bound			East Bound			West Bound		
Movement:	L - T - R			L - T - R			L - T - R			L - T - R		
Control:	Protected			Protected			Permitted			Permitted		
Rights:	Include			Include			Include			Include		
Min. Green:	10	18	18	10	18	18	28	28	28	28	28	28
Lanes:	1 0 2 0 1			1 0 2 0 1			1 0 0 1 0			1 0 0 1 0		
Volume Module:												
Base Vol:	74	379	76	362	941	542	197	122	70	39	76	151
Growth Adj:	1.00	1.00	1.00	1.00	1.00	1.00	1.00	1.00	1.00	1.00	1.00	1.00
Initial Bse:	74	379	76	362	941	542	197	122	70	39	76	151
User Adj:	1.00	1.00	1.00	1.00	1.00	1.00	1.00	1.00	1.00	1.00	1.00	1.00
PHF Adj:	0.77	0.77	0.77	0.86	0.86	0.86	0.93	0.93	0.93	0.85	0.85	0.85
PHF Volume:	96	494	99	421	1094	630	212	131	75	46	89	177
Reduct Vol:	0	0	0	0	0	0	0	0	0	0	0	0
Reduced Vol:	96	494	99	421	1094	630	212	131	75	46	89	177
PCE Adj:	1.00	1.00	1.00	1.00	1.00	1.00	1.00	1.00	1.00	1.00	1.00	1.00
MLF Adj:	1.00	1.00	1.00	1.00	1.00	1.00	1.00	1.00	1.00	1.00	1.00	1.00
FinalVolume:	96	494	99	421	1094	630	212	131	75	46	89	177
Saturation Flow Module:												
Sat/Lane:	1800	1800	1800	1800	1800	1800	1800	1800	1800	1800	1800	1800
Adjustment:	0.94	1.00	1.00	0.94	1.00	1.00	0.94	1.00	1.00	0.94	1.00	1.00
Lanes:	1.00	2.00	1.00	1.00	2.00	1.00	1.00	0.64	0.36	1.00	0.33	0.67
Final Sat.:	1700	3600	1800	1700	3600	1800	1700	1144	656	1700	603	1197
Capacity Analysis Module:												
Vol/Sat:	0.06	0.14	0.06	0.25	0.30	0.35	0.12	0.11	0.11	0.03	0.15	0.15
Crit Moves:	****					****					****	
Green/Cycle:	0.11	0.28	0.28	0.34	0.51	0.51	0.31	0.31	0.31	0.31	0.31	0.31
Volume/Cap:	0.51	0.49	0.20	0.72	0.59	0.68	0.40	0.37	0.37	0.09	0.47	0.47
Delay/Veh:	40.0	27.6	25.0	30.0	16.0	18.7	24.9	24.5	24.5	22.0	25.7	25.7
User DelAdj:	1.00	1.00	1.00	1.00	1.00	1.00	1.00	1.00	1.00	1.00	1.00	1.00
AdjDel/Veh:	40.0	27.6	25.0	30.0	16.0	18.7	24.9	24.5	24.5	22.0	25.7	25.7
LOS by Move:	D	C	C	C	B	B	C	C	C	C	C	C
HCM2kAvgQ:	3	6	2	12	11	14	5	5	5	1	6	6

****

Note: Queue reported is the number of cars per lane.

****

LLUH Campus Transformation Project
Year 2023 Without Project
Evening Peak Hour

Level Of Service Computation Report
2000 HCM Operations Method (Base Volume Alternative)

****

Intersection #7 Anderson Street (NS) at Stewart Street (EW)

****

Cycle (sec): 60 Critical Vol./Cap.(X): 0.693
Loss Time (sec): 6 (Y+R=3.0 sec) Average Delay (sec/veh): 18.5
Optimal Cycle: OPTIMIZED Level Of Service: B

****

Approach:	North Bound			South Bound			East Bound			West Bound		
Movement:	L - T - R			L - T - R			L - T - R			L - T - R		
Control:	Protected			Protected			Permitted			Permitted		
Rights:	Include			Include			Include			Include		
Min. Green:	10	18	18	10	18	18	28	28	28	28	28	28
Lanes:	1 0 2 0 1			1 0 2 0 1			1 0 0 1 0			1 0 0 1 0		
Volume Module:												
Base Vol:	53	751	33	153	542	240	210	144	94	55	127	396
Growth Adj:	1.00	1.00	1.00	1.00	1.00	1.00	1.00	1.00	1.00	1.00	1.00	1.00
Initial Bse:	53	751	33	153	542	240	210	144	94	55	127	396
User Adj:	1.00	1.00	1.00	1.00	1.00	1.00	1.00	1.00	1.00	1.00	1.00	1.00
PHF Adj:	0.96	0.96	0.96	0.97	0.97	0.97	0.90	0.90	0.90	0.92	0.92	0.92
PHF Volume:	55	784	34	158	560	248	233	160	104	60	138	429
Reduct Vol:	0	0	0	0	0	0	0	0	0	0	0	0
Reduced Vol:	55	784	34	158	560	248	233	160	104	60	138	429
PCE Adj:	1.00	1.00	1.00	1.00	1.00	1.00	1.00	1.00	1.00	1.00	1.00	1.00
MLF Adj:	1.00	1.00	1.00	1.00	1.00	1.00	1.00	1.00	1.00	1.00	1.00	1.00
FinalVolume:	55	784	34	158	560	248	233	160	104	60	138	429
Saturation Flow Module:												
Sat/Lane:	1800	1800	1800	1800	1800	1800	1800	1800	1800	1800	1800	1800
Adjustment:	0.94	1.00	1.00	0.94	1.00	1.00	0.94	1.00	1.00	0.94	1.00	1.00
Lanes:	1.00	2.00	1.00	1.00	2.00	1.00	1.00	0.61	0.39	1.00	0.24	0.76
Final Sat.:	1700	3600	1800	1700	3600	1800	1700	1089	711	1700	437	1363
Capacity Analysis Module:												
Vol/Sat:	0.03	0.22	0.02	0.09	0.16	0.14	0.14	0.15	0.15	0.04	0.32	0.32
Crit Moves:		****		****							****	
Green/Cycle:	0.16	0.29	0.29	0.16	0.29	0.29	0.45	0.45	0.45	0.45	0.45	0.45
Volume/Cap:	0.20	0.75	0.07	0.58	0.54	0.47	0.30	0.33	0.33	0.08	0.70	0.70
Delay/Veh:	22.9	23.0	16.0	27.1	19.0	18.8	11.0	11.2	11.2	9.7	16.3	16.3
User DelAdj:	1.00	1.00	1.00	1.00	1.00	1.00	1.00	1.00	1.00	1.00	1.00	1.00
AdjDel/Veh:	22.9	23.0	16.0	27.1	19.0	18.8	11.0	11.2	11.2	9.7	16.3	16.3
LOS by Move:	C	C	B	C	B	B	B	B	B	A	B	B
HCM2kAvgQ:	1	9	0	4	5	4	3	3	3	1	10	10

****

Note: Queue reported is the number of cars per lane.

****

LLUH Campus Transformation Project
Year 2023 Without Project
Morning Peak Hour

Level Of Service Computation Report
2000 HCM Operations Method (Base Volume Alternative)

****

Intersection #8 Anderson Street (NS) at University Avenue (EW)

****

Cycle (sec): 130 Critical Vol./Cap.(X): 0.404
Loss Time (sec): 4 (Y+R=3.0 sec) Average Delay (sec/veh): 6.9
Optimal Cycle: OPTIMIZED Level Of Service: A

****

Approach:	North Bound			South Bound			East Bound			West Bound		
Movement:	L -	T -	R	L -	T -	R	L -	T -	R	L -	T -	R
Control:	Permitted			Permitted			Permitted			Permitted		
Rights:	Include			Include			Include			Include		
Min. Green:	18	18	18	18	18	18	28	28	28	0	0	0
Lanes:	1 0	2 0	0	0 0	2 0	1	1 0	0 0	1	0 0	0 0	0
Volume Module:												
Base Vol:	71	477	0	0	923	129	33	0	27	0	0	0
Growth Adj:	1.00	1.00	1.00	1.00	1.00	1.00	1.00	1.00	1.00	1.00	1.00	1.00
Initial Bse:	71	477	0	0	923	129	33	0	27	0	0	0
User Adj:	1.00	1.00	1.00	1.00	1.00	1.00	1.00	1.00	1.00	1.00	1.00	1.00
PHF Adj:	0.81	0.81	0.81	0.70	0.70	0.70	0.79	0.79	0.79	1.00	1.00	1.00
PHF Volume:	88	592	0	0	1323	185	42	0	34	0	0	0
Reduct Vol:	0	0	0	0	0	0	0	0	0	0	0	0
Reduced Vol:	88	592	0	0	1323	185	42	0	34	0	0	0
PCE Adj:	1.00	1.00	1.00	1.00	1.00	1.00	1.00	1.00	1.00	1.00	1.00	1.00
MLF Adj:	1.00	1.00	1.00	1.00	1.00	1.00	1.00	1.00	1.00	1.00	1.00	1.00
FinalVolume:	88	592	0	0	1323	185	42	0	34	0	0	0
Saturation Flow Module:												
Sat/Lane:	1800	1800	1800	1800	1800	1800	1800	1800	1800	1800	1800	1800
Adjustment:	0.94	1.00	1.00	0.94	1.00	1.00	0.94	1.00	1.00	0.94	1.00	1.00
Lanes:	1.00	2.00	0.00	0.00	2.00	1.00	1.00	0.00	1.00	0.00	0.00	0.00
Final Sat.:	1700	3600	0	0	3600	1800	1700	0	1800	0	0	0
Capacity Analysis Module:												
Vol/Sat:	0.05	0.16	0.00	0.00	0.37	0.10	0.02	0.00	0.02	0.00	0.00	0.00
Crit Moves:					****		****					
Green/Cycle:	0.75	0.75	0.00	0.00	0.75	0.75	0.22	0.00	0.22	0.00	0.00	0.00
Volume/Cap:	0.07	0.22	0.00	0.00	0.49	0.14	0.11	0.00	0.09	0.00	0.00	0.00
Delay/Veh:	4.2	4.8	0.0	0.0	6.4	4.4	41.2	0.0	40.9	0.0	0.0	0.0
User DelAdj:	1.00	1.00	1.00	1.00	1.00	1.00	1.00	1.00	1.00	1.00	1.00	1.00
AdjDel/Veh:	4.2	4.8	0.0	0.0	6.4	4.4	41.2	0.0	40.9	0.0	0.0	0.0
LOS by Move:	A	A	A	A	A	A	D	A	D	A	A	A
HCM2kAvgQ:	1	3	0	0	10	2	1	0	1	0	0	0

****

Note: Queue reported is the number of cars per lane.

****

LLUH Campus Transformation Project
Year 2023 Without Project
Evening Peak Hour

Level Of Service Computation Report
2000 HCM Operations Method (Base Volume Alternative)

****

Intersection #8 Anderson Street (NS) at University Avenue (EW)

****

Cycle (sec): 130 Critical Vol./Cap.(X): 0.318
Loss Time (sec): 4 (Y+R=3.0 sec) Average Delay (sec/veh): 7.4
Optimal Cycle: OPTIMIZED Level Of Service: A

****

Approach:	North Bound			South Bound			East Bound			West Bound		
Movement:	L -	T -	R	L -	T -	R	L -	T -	R	L -	T -	R
Control:	Permitted			Permitted			Permitted			Permitted		
Rights:	Include			Include			Include			Include		
Min. Green:	18	18	18	18	18	18	28	28	28	0	0	0
Lanes:	1 0	2 0	0	0 0	2 0	1	1 0	0 0	1	0 0	0 0	0
Volume Module:												
Base Vol:	60	832	0	0	638	55	58	0	32	0	0	0
Growth Adj:	1.00	1.00	1.00	1.00	1.00	1.00	1.00	1.00	1.00	1.00	1.00	1.00
Initial Bse:	60	832	0	0	638	55	58	0	32	0	0	0
User Adj:	1.00	1.00	1.00	1.00	1.00	1.00	1.00	1.00	1.00	1.00	1.00	1.00
PHF Adj:	0.88	0.88	0.88	0.84	0.84	0.84	0.74	0.74	0.74	1.00	1.00	1.00
PHF Volume:	68	945	0	0	758	65	78	0	43	0	0	0
Reduct Vol:	0	0	0	0	0	0	0	0	0	0	0	0
Reduced Vol:	68	945	0	0	758	65	78	0	43	0	0	0
PCE Adj:	1.00	1.00	1.00	1.00	1.00	1.00	1.00	1.00	1.00	1.00	1.00	1.00
MLF Adj:	1.00	1.00	1.00	1.00	1.00	1.00	1.00	1.00	1.00	1.00	1.00	1.00
FinalVolume:	68	945	0	0	758	65	78	0	43	0	0	0
Saturation Flow Module:												
Sat/Lane:	1800	1800	1800	1800	1800	1800	1800	1800	1800	1800	1800	1800
Adjustment:	0.94	1.00	1.00	0.94	1.00	1.00	0.94	1.00	1.00	0.94	1.00	1.00
Lanes:	1.00	2.00	0.00	0.00	2.00	1.00	1.00	0.00	1.00	0.00	0.00	0.00
Final Sat.:	1700	3600	0	0	3600	1800	1700	0	1800	0	0	0
Capacity Analysis Module:												
Vol/Sat:	0.04	0.26	0.00	0.00	0.21	0.04	0.05	0.00	0.02	0.00	0.00	0.00
Crit Moves:		****					****					
Green/Cycle:	0.75	0.75	0.00	0.00	0.75	0.75	0.22	0.00	0.22	0.00	0.00	0.00
Volume/Cap:	0.05	0.35	0.00	0.00	0.28	0.05	0.21	0.00	0.11	0.00	0.00	0.00
Delay/Veh:	4.1	5.4	0.0	0.0	5.0	4.1	42.2	0.0	41.1	0.0	0.0	0.0
User DelAdj:	1.00	1.00	1.00	1.00	1.00	1.00	1.00	1.00	1.00	1.00	1.00	1.00
AdjDel/Veh:	4.1	5.4	0.0	0.0	5.0	4.1	42.2	0.0	41.1	0.0	0.0	0.0
LOS by Move:	A	A	A	A	A	A	D	A	D	A	A	A
HCM2kAvgQ:	1	6	0	0	5	1	3	0	1	0	0	0

****

Note: Queue reported is the number of cars per lane.

****

LLUH Campus Transformation Project
Year 2023 Without Project
Morning Peak Hour

Level Of Service Computation Report
2000 HCM 4-Way Stop Method (Base Volume Alternative)

Intersection #9 Anderson Street (NS) at Mound Street (EW)

Cycle (sec):	0	Critical Vol./Cap.(X):	0.763
Loss Time (sec):	0 (Y+R=4.0 sec)	Average Delay (sec/veh):	21.2
Optimal Cycle:	0	Level Of Service:	C

Approach:	North Bound			South Bound			East Bound			West Bound		
Movement:	L - T - R			L - T - R			L - T - R			L - T - R		
Control:	Stop Sign			Stop Sign			Stop Sign			Stop Sign		
Rights:	Include			Include			Include			Include		
Min. Green:	0	0	0	0	0	0	0	0	0	0	0	0
Lanes:	1 1 0 0 1			0 0 1! 0 0			1 0 0 1 1			0 0 1! 0 0		
Volume Module:												
Base Vol:	512	72	70	22	30	17	31	118	768	32	21	10
Growth Adj:	1.00	1.00	1.00	1.00	1.00	1.00	1.00	1.00	1.00	1.00	1.00	1.00
Initial Bse:	512	72	70	22	30	17	31	118	768	32	21	10
User Adj:	1.00	1.00	1.00	1.00	1.00	1.00	1.00	1.00	1.00	1.00	1.00	1.00
PHF Adj:	1.00	1.00	1.00	1.00	1.00	1.00	1.00	1.00	1.00	1.00	1.00	1.00
PHF Volume:	512	72	70	22	30	17	31	118	768	32	21	10
Reduct Vol:	0	0	0	0	0	0	0	0	0	0	0	0
Reduced Vol:	512	72	70	22	30	17	31	118	768	32	21	10
PCE Adj:	1.00	1.00	1.00	1.00	1.00	1.00	1.00	1.00	1.00	1.00	1.00	1.00
MLF Adj:	1.00	1.00	1.00	1.00	1.00	1.00	1.00	1.00	1.00	1.00	1.00	1.00
FinalVolume:	512	72	70	22	30	17	31	118	768	32	21	10
Saturation Flow Module:												
Adjustment:	1.00	1.00	1.00	1.00	1.00	1.00	1.00	1.00	1.00	1.00	1.00	1.00
Lanes:	1.75	0.25	1.00	0.32	0.43	0.25	1.00	0.27	1.73	0.51	0.33	0.16
Final Sat.:	845	120	565	151	206	117	496	155	1025	239	157	75
Capacity Analysis Module:												
Vol/Sat:	0.61	0.60	0.12	0.15	0.15	0.15	0.06	0.76	0.75	0.13	0.13	0.13
Crit Moves:	****			****				****		****		
Delay/Veh:	20.4	20.0	9.8	11.6	11.6	11.6	10.3	25.5	24.2	11.5	11.5	11.5
Delay Adj:	1.00	1.00	1.00	1.00	1.00	1.00	1.00	1.00	1.00	1.00	1.00	1.00
AdjDel/Veh:	20.4	20.0	9.8	11.6	11.6	11.6	10.3	25.5	24.2	11.5	11.5	11.5
LOS by Move:	C	C	A	B	B	B	B	D	C	B	B	B
ApproachDel:		19.2			11.6			23.9			11.5	
Delay Adj:		1.00			1.00			1.00			1.00	
ApprAdjDel:		19.2			11.6			23.9			11.5	
LOS by Appr:		C			B			C			B	
AllWayAvgQ:	1.4	1.4	0.1	0.2	0.2	0.2	0.1	2.7	2.7	0.1	0.1	0.1

Note: Queue reported is the number of cars per lane.

LLUH Campus Transformation Project
Year 2023 Without Project
Evening Peak Hour

Level Of Service Computation Report
2000 HCM 4-Way Stop Method (Base Volume Alternative)

****

Intersection #9 Anderson Street (NS) at Mound Street (EW)

****

Cycle (sec): 0 Critical Vol./Cap.(X): 0.876
Loss Time (sec): 0 (Y+R=4.0 sec) Average Delay (sec/veh): 29.3
Optimal Cycle: 0 Level Of Service: D

****

Approach:	North Bound			South Bound			East Bound			West Bound		
Movement:	L -	T -	R	L -	T -	R	L -	T -	R	L -	T -	R
Control:	Stop Sign			Stop Sign			Stop Sign			Stop Sign		
Rights:	Include			Include			Include			Include		
Min. Green:	0	0	0	0	0	0	0	0	0	0	0	0
Lanes:	1 1	0 0	1	0 0	1! 0	0	1 0	0 1	1	0 0	1! 0	0
Volume Module:												
Base Vol:	766	76	47	9	65	9	26	59	597	68	115	8
Growth Adj:	1.00	1.00	1.00	1.00	1.00	1.00	1.00	1.00	1.00	1.00	1.00	1.00
Initial Bse:	766	76	47	9	65	9	26	59	597	68	115	8
User Adj:	1.00	1.00	1.00	1.00	1.00	1.00	1.00	1.00	1.00	1.00	1.00	1.00
PHF Adj:	1.00	1.00	1.00	1.00	1.00	1.00	1.00	1.00	1.00	1.00	1.00	1.00
PHF Volume:	766	76	47	9	65	9	26	59	597	68	115	8
Reduct Vol:	0	0	0	0	0	0	0	0	0	0	0	0
Reduced Vol:	766	76	47	9	65	9	26	59	597	68	115	8
PCE Adj:	1.00	1.00	1.00	1.00	1.00	1.00	1.00	1.00	1.00	1.00	1.00	1.00
MLF Adj:	1.00	1.00	1.00	1.00	1.00	1.00	1.00	1.00	1.00	1.00	1.00	1.00
FinalVolume:	766	76	47	9	65	9	26	59	597	68	115	8
Saturation Flow Module:												
Adjustment:	1.00	1.00	1.00	1.00	1.00	1.00	1.00	1.00	1.00	1.00	1.00	1.00
Lanes:	1.82	0.18	1.00	0.11	0.78	0.11	1.00	0.18	1.82	0.36	0.60	0.04
Final Sat.:	874	87	562	46	336	46	448	94	957	163	276	19
Capacity Analysis Module:												
Vol/Sat:	0.88	0.87	0.08	0.19	0.19	0.19	0.06	0.63	0.62	0.42	0.42	0.42
Crit Moves:	****				****			****			****	
Delay/Veh:	43.1	42.0	9.6	12.8	12.8	12.8	11.1	20.2	19.8	15.9	15.9	15.9
Delay Adj:	1.00	1.00	1.00	1.00	1.00	1.00	1.00	1.00	1.00	1.00	1.00	1.00
AdjDel/Veh:	43.1	42.0	9.6	12.8	12.8	12.8	11.1	20.2	19.8	15.9	15.9	15.9
LOS by Move:	E	E	A	B	B	B	B	C	C	C	C	C
ApproachDel:		41.3			12.8			19.5			15.9	
Delay Adj:		1.00			1.00			1.00			1.00	
ApprAdjDel:		41.3			12.8			19.5			15.9	
LOS by Appr:		E			B			C			C	
AllWayAvgQ:	4.3	4.3	0.1	0.2	0.2	0.2	0.1	1.5	1.5	0.7	0.7	0.7

****

Note: Queue reported is the number of cars per lane.

****

LLUH Campus Transformation Project
Year 2023 Without Project
Morning Peak Hour

Level Of Service Computation Report
2000 HCM Unsignalized Method (Base Volume Alternative)

****

Intersection #10 Anderson Street (NS) at Taylor Street (EW)

****

Average Delay (sec/veh): 0.7 Worst Case Level Of Service: B[11.1]

****

Approach:	North Bound			South Bound			East Bound			West Bound		
Movement:	L - T - R			L - T - R			L - T - R			L - T - R		
Control:	Uncontrolled			Uncontrolled			Stop Sign			Stop Sign		
Rights:	Include			Include			Include			Include		
Lanes:	1 0 2 0 0			0 0 1 1 0			0 0 0 0 0			0 0 0 0 0		
Volume Module:												
Base Vol:	94	640	0	0	810	45	0	0	0	0	0	0
Growth Adj:	1.00	1.00	1.00	1.00	1.00	1.00	1.00	1.00	1.00	1.00	1.00	1.00
Initial Bse:	94	640	0	0	810	45	0	0	0	0	0	0
User Adj:	1.00	1.00	1.00	1.00	1.00	1.00	1.00	1.00	1.00	1.00	1.00	1.00
PHF Adj:	0.77	0.77	0.77	0.87	0.87	0.87	0.25	0.25	0.25	1.00	1.00	1.00
PHF Volume:	122	833	0	0	932	52	0	0	0	0	0	0
Reduct Vol:	0	0	0	0	0	0	0	0	0	0	0	0
FinalVolume:	122	833	0	0	932	52	0	0	0	0	0	0
Critical Gap Module:												
Critical Gp:	4.1	xxxx	xxxxx	xxxxx	xxxx	xxxxx	xxxxx	xxxx	xxxxx	xxxxx	xxxx	xxxxx
FollowUpTim:	2.2	xxxx	xxxxx	xxxxx	xxxx	xxxxx	xxxxx	xxxx	xxxxx	xxxxx	xxxx	xxxxx
Capacity Module:												
Cnflict Vol:	984	xxxx	xxxxx	xxxx	xxxx	xxxxx	xxxx	xxxx	xxxxx	xxxx	xxxx	xxxxx
Potent Cap.:	710	xxxx	xxxxx	xxxx	xxxx	xxxxx	xxxx	xxxx	xxxxx	xxxx	xxxx	xxxxx
Move Cap.:	710	xxxx	xxxxx	xxxx	xxxx	xxxxx	xxxx	xxxx	xxxxx	xxxx	xxxx	xxxxx
Volume/Cap:	0.17	xxxx	xxxx	xxxx	xxxx	xxxx	xxxx	xxxx	xxxx	xxxx	xxxx	xxxx
Level Of Service Module:												
2Way95thQ:	0.6	xxxx	xxxxx	xxxx	xxxx	xxxxx	xxxx	xxxx	xxxxx	xxxx	xxxx	xxxxx
Control Del:	11.1	xxxx	xxxxx	xxxxx	xxxx	xxxxx	xxxxx	xxxx	xxxxx	xxxxx	xxxx	xxxxx
LOS by Move:	B	*	*	*	*	*	*	*	*	*	*	*
Movement:	LT - LTR - RT			LT - LTR - RT			LT - LTR - RT			LT - LTR - RT		
Shared Cap.:	xxxx	xxxx	xxxxx	xxxx	xxxx	xxxxx	xxxx	xxxx	xxxxx	xxxx	xxxx	xxxxx
SharedQueue:	xxxxx	xxxx	xxxxx	xxxxx	xxxx	xxxxx	xxxxx	xxxx	xxxxx	xxxxx	xxxx	xxxxx
Shrd ConDel:	xxxxx	xxxx	xxxxx	xxxxx	xxxx	xxxxx	xxxxx	xxxx	xxxxx	xxxxx	xxxx	xxxxx
Shared LOS:	*	*	*	*	*	*	*	*	*	*	*	*
ApproachDel:	xxxxxx			xxxxxx			xxxxxx			xxxxxx		
ApproachLOS:	*			*			*			*		

****

Note: Queue reported is the number of cars per lane.

****

LLUH Campus Transformation Project
Year 2023 Without Project
Evening Peak Hour

Level Of Service Computation Report
2000 HCM Unsignalized Method (Base Volume Alternative)

Intersection #10 Anderson Street (NS) at Taylor Street (EW)

Average Delay (sec/veh): 0.1 Worst Case Level Of Service: A[9.4]

Approach:	North Bound			South Bound			East Bound			West Bound		
Movement:	L - T - R			L - T - R			L - T - R			L - T - R		
Control:	Uncontrolled			Uncontrolled			Stop Sign			Stop Sign		
Rights:	Include			Include			Include			Include		
Lanes:	1 0 2 0 0			0 0 1 1 0			0 0 0 0 0			0 0 0 0 0		
Volume Module:												
Base Vol:	16	860	0	0	720	6	0	0	0	0	0	0
Growth Adj:	1.00	1.00	1.00	1.00	1.00	1.00	1.00	1.00	1.00	1.00	1.00	1.00
Initial Bse:	16	860	0	0	720	6	0	0	0	0	0	0
User Adj:	1.00	1.00	1.00	1.00	1.00	1.00	1.00	1.00	1.00	1.00	1.00	1.00
PHF Adj:	0.91	0.91	0.91	0.91	0.91	0.91	1.00	1.00	1.00	1.00	1.00	1.00
PHF Volume:	18	945	0	0	792	7	0	0	0	0	0	0
Reduct Vol:	0	0	0	0	0	0	0	0	0	0	0	0
FinalVolume:	18	945	0	0	792	7	0	0	0	0	0	0
Critical Gap Module:												
Critical Gp:	4.1	xxxx	xxxxx	xxxxx	xxxx	xxxxx	xxxxx	xxxx	xxxxx	xxxxx	xxxx	xxxxx
FollowUpTim:	2.2	xxxx	xxxxx	xxxxx	xxxx	xxxxx	xxxxx	xxxx	xxxxx	xxxxx	xxxx	xxxxx
Capacity Module:												
Cnflict Vol:	798	xxxx	xxxxx	xxxx	xxxx	xxxxx	xxxx	xxxx	xxxxx	xxxx	xxxx	xxxxx
Potent Cap.:	833	xxxx	xxxxx	xxxx	xxxx	xxxxx	xxxx	xxxx	xxxxx	xxxx	xxxx	xxxxx
Move Cap.:	833	xxxx	xxxxx	xxxx	xxxx	xxxxx	xxxx	xxxx	xxxxx	xxxx	xxxx	xxxxx
Volume/Cap:	0.02	xxxx	xxxx	xxxx	xxxx	xxxx	xxxx	xxxx	xxxx	xxxx	xxxx	xxxx
Level Of Service Module:												
2Way95thQ:	0.1	xxxx	xxxxx	xxxx	xxxx	xxxxx	xxxx	xxxx	xxxxx	xxxx	xxxx	xxxxx
Control Del:	9.4	xxxx	xxxxx	xxxxx	xxxx	xxxxx	xxxxx	xxxx	xxxxx	xxxxx	xxxx	xxxxx
LOS by Move:	A	*	*	*	*	*	*	*	*	*	*	*
Movement:	LT - LTR - RT			LT - LTR - RT			LT - LTR - RT			LT - LTR - RT		
Shared Cap.:	xxxx	xxxx	xxxxx	xxxx	xxxx	xxxxx	xxxx	xxxx	xxxxx	xxxx	xxxx	xxxxx
SharedQueue:	xxxxx	xxxx	xxxxx	xxxxx	xxxx	xxxxx	xxxxx	xxxx	xxxxx	xxxxx	xxxx	xxxxx
Shrd ConDel:	xxxxx	xxxx	xxxxx	xxxxx	xxxx	xxxxx	xxxxx	xxxx	xxxxx	xxxxx	xxxx	xxxxx
Shared LOS:	*	*	*	*	*	*	*	*	*	*	*	*
ApproachDel:	xxxxxx			xxxxxx			xxxxxx			xxxxxx		
ApproachLOS:	*			*			*			*		

Note: Queue reported is the number of cars per lane.

LLUH Campus Transformation Project
Year 2023 Without Project
Morning Peak Hour

Level Of Service Computation Report
2000 HCM 4-Way Stop Method (Base Volume Alternative)

****

Intersection #11 Anderson Street (NS) at Prospect Avenue (EW)

****

Cycle (sec): 0 Critical Vol./Cap.(X): 0.958
Loss Time (sec): 0 (Y+R=4.0 sec) Average Delay (sec/veh): 39.4
Optimal Cycle: 0 Level Of Service: E

****

Approach:	North Bound			South Bound			East Bound			West Bound		
Movement:	L - T - R			L - T - R			L - T - R			L - T - R		
Control:	Stop Sign			Stop Sign			Stop Sign			Stop Sign		
Rights:	Include			Include			Include			Include		
Min. Green:	0	0	0	0	0	0	0	0	0	0	0	0
Lanes:	0 0 1	1 0		1 0 2	0 0		0 0 1!	0 0		0 0 1!	0 0	
Volume Module:												
Base Vol:	0	486	141	282	514	0	57	37	58	78	0	227
Growth Adj:	1.00	1.00	1.00	1.00	1.00	1.00	1.00	1.00	1.00	1.00	1.00	1.00
Initial Bse:	0	486	141	282	514	0	57	37	58	78	0	227
User Adj:	1.00	1.00	1.00	1.00	1.00	1.00	1.00	1.00	1.00	1.00	1.00	1.00
PHF Adj:	0.74	0.74	0.74	0.88	0.88	0.88	0.70	0.70	0.70	0.84	0.84	0.84
PHF Volume:	0	659	191	321	585	0	81	53	82	93	0	269
Reduct Vol:	0	0	0	0	0	0	0	0	0	0	0	0
Reduced Vol:	0	659	191	321	585	0	81	53	82	93	0	269
PCE Adj:	1.00	1.00	1.00	1.00	1.00	1.00	1.00	1.00	1.00	1.00	1.00	1.00
MLF Adj:	1.00	1.00	1.00	1.00	1.00	1.00	1.00	1.00	1.00	1.00	1.00	1.00
FinalVolume:	0	659	191	321	585	0	81	53	82	93	0	269
Saturation Flow Module:												
Adjustment:	1.00	1.00	1.00	1.00	1.00	1.00	1.00	1.00	1.00	1.00	1.00	1.00
Lanes:	0.00	1.55	0.45	1.00	2.00	0.00	0.38	0.24	0.38	0.26	0.00	0.74
Final Sat.:	0	688	205	419	889	0	156	101	159	120	0	351
Capacity Analysis Module:												
Vol/Sat:	xxxx	0.96	0.93	0.77	0.66	xxxx	0.52	0.52	0.52	0.77	xxxx	0.77
Crit Moves:		****		****			****			****		
Delay/Veh:	0.0	61.6	55.5	34.0	24.8	0.0	19.5	19.5	19.5	30.5	0.0	30.5
Delay Adj:	1.00	1.00	1.00	1.00	1.00	1.00	1.00	1.00	1.00	1.00	1.00	1.00
AdjDel/Veh:	0.0	61.6	55.5	34.0	24.8	0.0	19.5	19.5	19.5	30.5	0.0	30.5
LOS by Move:	*	F	F	D	C	*	C	C	C	D	*	D
ApproachDel:		60.2			28.1			19.5			30.5	
Delay Adj:		1.00			1.00			1.00			1.00	
ApprAdjDel:		60.2			28.1			19.5			30.5	
LOS by Appr:		F			D			C			D	
AllWayAvgQ:	0.0	6.6	5.7	2.6	1.7	0.0	0.9	0.9	0.9	2.6	2.6	2.6

****

Note: Queue reported is the number of cars per lane.

****

LLUH Campus Transformation Project
Year 2023 Without Project
Evening Peak Hour

Level Of Service Computation Report
2000 HCM 4-Way Stop Method (Base Volume Alternative)

****

Intersection #11 Anderson Street (NS) at Prospect Avenue (EW)

****

Cycle (sec):	0	Critical Vol./Cap.(X):	1.427
Loss Time (sec):	0 (Y+R=4.0 sec)	Average Delay (sec/veh):	97.8
Optimal Cycle:	0	Level Of Service:	F

****

Approach:	North Bound			South Bound			East Bound			West Bound		
Movement:	L -	T -	R	L -	T -	R	L -	T -	R	L -	T -	R
Control:	Stop Sign			Stop Sign			Stop Sign			Stop Sign		
Rights:	Include			Include			Include			Include		
Min. Green:	0	0	0	0	0	0	0	0	0	0	0	0
Lanes:	0 0	1 1	0	1 0	2 0	0	0 0	1! 0	0	0 0	1! 0	0
Volume Module:												
Base Vol:	0	549	211	161	579	0	98	79	137	236	0	274
Growth Adj:	1.00	1.00	1.00	1.00	1.00	1.00	1.00	1.00	1.00	1.00	1.00	1.00
Initial Bse:	0	549	211	161	579	0	98	79	137	236	0	274
User Adj:	1.00	1.00	1.00	1.00	1.00	1.00	1.00	1.00	1.00	1.00	1.00	1.00
PHF Adj:	0.97	0.97	0.97	0.86	0.86	0.86	0.80	0.80	0.80	0.88	0.88	0.88
PHF Volume:	0	565	217	187	674	0	123	99	172	270	0	313
Reduct Vol:	0	0	0	0	0	0	0	0	0	0	0	0
Reduced Vol:	0	565	217	187	674	0	123	99	172	270	0	313
PCE Adj:	1.00	1.00	1.00	1.00	1.00	1.00	1.00	1.00	1.00	1.00	1.00	1.00
MLF Adj:	1.00	1.00	1.00	1.00	1.00	1.00	1.00	1.00	1.00	1.00	1.00	1.00
FinalVolume:	0	565	217	187	674	0	123	99	172	270	0	313
Saturation Flow Module:												
Adjustment:	1.00	1.00	1.00	1.00	1.00	1.00	1.00	1.00	1.00	1.00	1.00	1.00
Lanes:	0.00	1.44	0.56	1.00	2.00	0.00	0.31	0.25	0.44	0.46	0.01	0.53
Final Sat.:	0	564	223	370	780	0	126	102	176	189	0	220
Capacity Analysis Module:												
Vol/Sat:	xxxx	1.00	0.97	0.51	0.86	xxxx	0.97	0.97	0.97	1.43	0.00	1.43
Crit Moves:		****			****		****			****		
Delay/Veh:	0.0	77.0	68.4	22.0	48.6	0.0	68.5	68.5	68.5	229.7	230	229.7
Delay Adj:	1.00	1.00	1.00	1.00	1.00	1.00	1.00	1.00	1.00	1.00	1.00	1.00
AdjDel/Veh:	0.0	77.0	68.4	22.0	48.6	0.0	68.5	68.5	68.5	229.7	230	229.7
LOS by Move:	*	F	F	C	E	*	F	F	F	F	F	F
ApproachDel:		74.6			42.8			68.5			229.7	
Delay Adj:		1.00			1.00			1.00			1.00	
ApprAdjDel:		74.6			42.8			68.5			229.7	
LOS by Appr:		F			E			F			F	
AllWayAvgQ:	0.0	7.4	6.3	1.0	4.0	0.0	6.4	6.4	6.4	24.7	24.7	24.7

****

Note: Queue reported is the number of cars per lane.

****

LLUH Campus Transformation Project
Year 2023 Without Project
Morning Peak Hour

Level Of Service Computation Report
2000 HCM Unsignalized Method (Base Volume Alternative)

****

Intersection #12 Anderson Street (NS) at Main Project Access (EW)

****

Average Delay (sec/veh): 5.1 Worst Case Level Of Service: D[25.9]

****

Approach:	North Bound			South Bound			East Bound			West Bound		
Movement:	L - T - R			L - T - R			L - T - R			L - T - R		
Control:	Uncontrolled			Uncontrolled			Stop Sign			Stop Sign		
Rights:	Include			Include			Include			Include		
Lanes:	1 0 2 0 0			0 0 1 1 0			1 0 0 0 1			0 0 0 0 0		
Volume Module:												
Base Vol:	169	462	0	0	448	231	108	0	132	0	0	0
Growth Adj:	1.00	1.00	1.00	1.00	1.00	1.00	1.00	1.00	1.00	1.00	1.00	1.00
Initial Bse:	169	462	0	0	448	231	108	0	132	0	0	0
User Adj:	1.00	1.00	1.00	1.00	1.00	1.00	1.00	1.00	1.00	1.00	1.00	1.00
PHF Adj:	0.73	0.73	0.73	0.90	0.90	0.90	0.85	0.85	0.85	1.00	1.00	1.00
PHF Volume:	231	631	0	0	498	257	127	0	155	0	0	0
Reduct Vol:	0	0	0	0	0	0	0	0	0	0	0	0
FinalVolume:	231	631	0	0	498	257	127	0	155	0	0	0
Critical Gap Module:												
Critical Gp:	4.1	xxxx	xxxxx	xxxxx	xxxx	xxxxx	6.8	xxxx	6.9	xxxxx	xxxx	xxxxx
FollowUpTim:	2.2	xxxx	xxxxx	xxxxx	xxxx	xxxxx	3.5	xxxx	3.3	xxxxx	xxxx	xxxxx
Capacity Module:												
Cnflict Vol:	755	xxxx	xxxxx	xxxx	xxxx	xxxxx	1404	xxxx	378	xxxx	xxxx	xxxxx
Potent Cap.:	864	xxxx	xxxxx	xxxx	xxxx	xxxxx	133	xxxx	626	xxxx	xxxx	xxxxx
Move Cap.:	864	xxxx	xxxxx	xxxx	xxxx	xxxxx	105	xxxx	626	xxxx	xxxx	xxxxx
Total Cap:	xxxx	xxxx	xxxxx	xxxx	xxxx	xxxxx	218	160	xxxxx	128	117	xxxxx
Volume/Cap:	0.27	xxxx	xxxx	xxxx	xxxx	xxxx	0.58	xxxx	0.25	xxxx	xxxx	xxxx
Level Of Service Module:												
2Way95thQ:	1.1	xxxx	xxxxx	xxxx	xxxx	xxxxx	3.2	xxxx	1.0	xxxx	xxxx	xxxxx
Control Del:	10.7	xxxx	xxxxx	xxxxx	xxxx	xxxxx	42.1	xxxx	12.6	xxxxx	xxxx	xxxxx
LOS by Move:	B	*	*	*	*	*	E	*	B	*	*	*
Movement:	LT - LTR - RT			LT - LTR - RT			LT - LTR - RT			LT - LTR - RT		
Shared Cap.:	xxxx	xxxx	xxxxx	xxxx	xxxx	xxxxx	xxxx	xxxx	xxxxx	xxxx	xxxx	xxxxx
SharedQueue:	xxxxx	xxxx	xxxxx	xxxxx	xxxx	xxxxx	xxxxx	xxxx	xxxxx	xxxxx	xxxx	xxxxx
Shrd ConDel:	xxxxx	xxxx	xxxxx	xxxxx	xxxx	xxxxx	xxxxx	xxxx	xxxxx	xxxxx	xxxx	xxxxx
Shared LOS:	*	*	*	*	*	*	*	*	*	*	*	*
ApproachDel:	xxxxxx			xxxxxx			25.9			xxxxxx		
ApproachLOS:	*			*			D			*		

****

Note: Queue reported is the number of cars per lane.

****

LLUH Campus Transformation Project
Year 2023 Without Project
Evening Peak Hour

Level Of Service Computation Report
2000 HCM Unsignalized Method (Base Volume Alternative)

Intersection #12 Anderson Street (NS) at Main Project Access (EW)

Average Delay (sec/veh): 12.9 Worst Case Level Of Service: F[52.4]

Approach:	North Bound			South Bound			East Bound			West Bound		
Movement:	L	T	R	L	T	R	L	T	R	L	T	R
Control:	Uncontrolled			Uncontrolled			Stop Sign			Stop Sign		
Rights:	Include			Include			Include			Include		
Lanes:	1 0 2 0 0			0 0 1 1 0			0 1 0 1 0			0 0 0 0 0		
Volume Module:												
Base Vol:	126	422	0	0	580	164	228	4	140	0	0	0
Growth Adj:	1.00	1.00	1.00	1.00	1.00	1.00	1.00	1.00	1.00	1.00	1.00	1.00
Initial Bse:	126	422	0	0	580	164	228	4	140	0	0	0
User Adj:	1.00	1.00	1.00	1.00	1.00	1.00	1.00	1.00	1.00	1.00	1.00	1.00
PHF Adj:	0.90	0.90	0.90	0.94	0.94	0.94	0.89	0.89	0.89	1.00	1.00	1.00
PHF Volume:	139	467	0	0	617	174	257	5	158	0	0	0
Reduct Vol:	0	0	0	0	0	0	0	0	0	0	0	0
FinalVolume:	139	467	0	0	617	174	257	5	158	0	0	0
Critical Gap Module:												
Critical Gp:	4.1	xxxx	xxxxx	xxxxx	xxxx	xxxxx	6.8	6.5	6.9	xxxxx	xxxx	xxxxx
FollowUpTim:	2.2	xxxx	xxxxx	xxxxx	xxxx	xxxxx	3.5	4.0	3.3	xxxxx	xxxx	xxxxx
Capacity Module:												
Cnflict Vol:	791	xxxx	xxxxx	xxxx	xxxx	xxxxx	1216	1449	396	xxxx	xxxx	xxxxx
Potent Cap.:	838	xxxx	xxxxx	xxxx	xxxx	xxxxx	176	132	609	xxxx	xxxx	xxxxx
Move Cap.:	838	xxxx	xxxxx	xxxx	xxxx	xxxxx	154	110	609	xxxx	xxxx	xxxxx
Total Cap:	xxxx	xxxx	xxxxx	xxxx	xxxx	xxxxx	283	229	xxxxx	205	181	xxxxx
Volume/Cap:	0.17	xxxx	xxxx	xxxx	xxxx	xxxx	0.91	0.02	0.26	xxxx	xxxx	xxxx
Level Of Service Module:												
2Way95thQ:	0.6	xxxx	xxxxx	xxxx	xxxx	xxxxx	xxxx	xxxx	xxxxx	xxxx	xxxx	xxxxx
Control Del:	10.1	xxxx	xxxxx	xxxxx	xxxx	xxxxx	xxxxx	xxxx	xxxxx	xxxxx	xxxx	xxxxx
LOS by Move:	B	*	*	*	*	*	*	*	*	*	*	*
Movement:	LT	LTR	RT	LT	LTR	RT	LT	LTR	RT	LT	LTR	RT
Shared Cap.:	xxxx	xxxx	xxxxx	xxxx	xxxx	xxxxx	282	xxxx	582	xxxx	xxxx	xxxxx
SharedQueue:	xxxxx	xxxx	xxxxx	xxxxx	xxxx	xxxxx	8.7	xxxx	1.1	xxxxx	xxxx	xxxxx
Shrd ConDel:	xxxxx	xxxx	xxxxx	xxxxx	xxxx	xxxxx	76.5	xxxx	13.6	xxxxx	xxxx	xxxxx
Shared LOS:	*	*	*	*	*	*	F	*	B	*	*	*
ApproachDel:	xxxxxx			xxxxxx			52.4			xxxxxx		
ApproachLOS:	*			*			F			*		

Note: Queue reported is the number of cars per lane.

LLUH Campus Transformation Project
Year 2023 Without Project
Morning Peak Hour

Level Of Service Computation Report
2000 HCM Unsignalized Method (Base Volume Alternative)

****

Intersection #13 Anderson Street (NS) at Starr Street (EW)

****

Average Delay (sec/veh): 0.4 Worst Case Level Of Service: B[13.7]

****

Approach:	North Bound			South Bound			East Bound			West Bound		
Movement:	L - T - R			L - T - R			L - T - R			L - T - R		
Control:	Uncontrolled			Uncontrolled			Stop Sign			Stop Sign		
Rights:	Include			Include			Include			Include		
Lanes:	0 0 1 1 0			1 0 2 0 0			0 0 0 0 0			0 0 1! 0 0		
Volume Module:												
Base Vol:	0	623	14	6	587	0	0	0	0	3	0	17
Growth Adj:	1.00	1.00	1.00	1.00	1.00	1.00	1.00	1.00	1.00	1.00	1.00	1.00
Initial Bse:	0	623	14	6	587	0	0	0	0	3	0	17
User Adj:	1.00	1.00	1.00	1.00	1.00	1.00	1.00	1.00	1.00	1.00	1.00	1.00
PHF Adj:	0.77	0.77	0.77	0.91	0.91	0.91	1.00	1.00	1.00	0.54	0.54	0.54
PHF Volume:	0	813	18	7	645	0	0	0	0	6	0	32
Reduct Vol:	0	0	0	0	0	0	0	0	0	0	0	0
FinalVolume:	0	813	18	7	645	0	0	0	0	6	0	32
Critical Gap Module:												
Critical Gp:	xxxxx	xxxx	xxxxx	4.1	xxxx	xxxxx	xxxxx	xxxx	xxxxx	6.8	6.5	6.9
FollowUpTim:	xxxxx	xxxx	xxxxx	2.2	xxxx	xxxxx	xxxxx	xxxx	xxxxx	3.5	4.0	3.3
Capacity Module:												
Cnflict Vol:	xxxx	xxxx	xxxxx	831	xxxx	xxxxx	xxxx	xxxx	xxxxx	1158	1481	416
Potent Cap.:	xxxx	xxxx	xxxxx	810	xxxx	xxxxx	xxxx	xxxx	xxxxx	192	127	591
Move Cap.:	xxxx	xxxx	xxxxx	810	xxxx	xxxxx	xxxx	xxxx	xxxxx	191	126	591
Volume/Cap:	xxxx	xxxx	xxxx	0.01	xxxx	xxxx	xxxx	xxxx	xxxx	0.03	0.00	0.05
Level Of Service Module:												
2Way95thQ:	xxxx	xxxx	xxxxx	0.0	xxxx	xxxxx	xxxx	xxxx	xxxxx	xxxx	xxxx	xxxxx
Control Del:	xxxxx	xxxx	xxxxx	9.5	xxxx	xxxxx	xxxxx	xxxx	xxxxx	xxxxx	xxxx	xxxxx
LOS by Move:	*	*	*	A	*	*	*	*	*	*	*	*
Movement:	LT - LTR - RT			LT - LTR - RT			LT - LTR - RT			LT - LTR - RT		
Shared Cap.:	xxxx	xxxx	xxxxx	xxxx	xxxx	xxxxx	xxxx	xxxx	xxxxx	xxxx	450	xxxxx
SharedQueue:	xxxxx	xxxx	xxxxx	xxxxx	xxxx	xxxxx	xxxxx	xxxx	xxxxx	xxxxx	0.3	xxxxx
Shrd ConDel:	xxxxx	xxxx	xxxxx	xxxxx	xxxx	xxxxx	xxxxx	xxxx	xxxxx	xxxxx	13.7	xxxxx
Shared LOS:	*	*	*	*	*	*	*	*	*	*	B	*
ApproachDel:	xxxxxx			xxxxxx			xxxxxx			13.7		
ApproachLOS:	*			*			*			B		

****

Note: Queue reported is the number of cars per lane.

****

LLUH Campus Transformation Project
Year 2023 Without Project
Evening Peak Hour

Level Of Service Computation Report
2000 HCM Unsignalized Method (Base Volume Alternative)

****

Intersection #13 Anderson Street (NS) at Starr Street (EW)

****

Average Delay (sec/veh): 0.8 Worst Case Level Of Service: C[15.1]

****

Approach:	North Bound			South Bound			East Bound			West Bound		
Movement:	L -	T -	R	L -	T -	R	L -	T -	R	L -	T -	R
Control:	Uncontrolled			Uncontrolled			Stop Sign			Stop Sign		
Rights:	Include			Include			Include			Include		
Lanes:	0 0	1 1	0	1 0	2 0	0	0 0	0 0	0	0 0	1! 0	0
Volume Module:												
Base Vol:	0	543	9	16	697	0	0	0	0	14	0	27
Growth Adj:	1.00	1.00	1.00	1.00	1.00	1.00	1.00	1.00	1.00	1.00	1.00	1.00
Initial Bse:	0	543	9	16	697	0	0	0	0	14	0	27
User Adj:	1.00	1.00	1.00	1.00	1.00	1.00	1.00	1.00	1.00	1.00	1.00	1.00
PHF Adj:	0.91	0.91	0.91	0.92	0.92	0.92	1.00	1.00	1.00	0.67	0.67	0.67
PHF Volume:	0	596	10	17	754	0	0	0	0	21	0	40
Reduct Vol:	0	0	0	0	0	0	0	0	0	0	0	0
FinalVolume:	0	596	10	17	754	0	0	0	0	21	0	40
Critical Gap Module:												
Critical Gp:	xxxxx	xxxx	xxxxx	4.1	xxxx	xxxxx	xxxxx	xxxx	xxxxx	6.8	6.5	6.9
FollowUpTim:	xxxxx	xxxx	xxxxx	2.2	xxxx	xxxxx	xxxxx	xxxx	xxxxx	3.5	4.0	3.3
Capacity Module:												
Cnflict Vol:	xxxx	xxxx	xxxxx	606	xxxx	xxxxx	xxxx	xxxx	xxxxx	1012	1389	303
Potent Cap.:	xxxx	xxxx	xxxxx	982	xxxx	xxxxx	xxxx	xxxx	xxxxx	239	144	699
Move Cap.:	xxxx	xxxx	xxxxx	982	xxxx	xxxxx	xxxx	xxxx	xxxxx	236	141	699
Volume/Cap:	xxxx	xxxx	xxxx	0.02	xxxx	xxxx	xxxx	xxxx	xxxx	0.09	0.00	0.06
Level Of Service Module:												
2Way95thQ:	xxxx	xxxx	xxxxx	0.1	xxxx	xxxxx	xxxx	xxxx	xxxxx	xxxx	xxxx	xxxxx
Control Del:	xxxxx	xxxx	xxxxx	8.7	xxxx	xxxxx	xxxxx	xxxx	xxxxx	xxxxx	xxxx	xxxxx
LOS by Move:	*	*	*	A	*	*	*	*	*	*	*	*
Movement:	LT -	LTR -	RT	LT -	LTR -	RT	LT -	LTR -	RT	LT -	LTR -	RT
Shared Cap.:	xxxx	xxxx	xxxxx	xxxx	xxxx	xxxxx	xxxx	xxxx	xxxxx	xxxx	418	xxxxx
SharedQueue:	xxxxx	xxxx	xxxxx	xxxxx	xxxx	xxxxx	xxxxx	xxxx	xxxxx	xxxxx	0.5	xxxxx
Shrd ConDel:	xxxxx	xxxx	xxxxx	xxxxx	xxxx	xxxxx	xxxxx	xxxx	xxxxx	xxxxx	15.1	xxxxx
Shared LOS:	*	*	*	*	*	*	*	*	*	*	C	*
ApproachDel:	xxxxxx			xxxxxx			xxxxxx			15.1		
ApproachLOS:	*			*			*			C		

****

Note: Queue reported is the number of cars per lane.

****

LLUH Campus Transformation Project
Year 2023 Without Project
Morning Peak Hour

Level Of Service Computation Report
2000 HCM Operations Method (Base Volume Alternative)

****

Intersection #14 Anderson Street (NS) at Barton Road (EW)

****

Cycle (sec): 130 Critical Vol./Cap.(X): 0.929
Loss Time (sec): 8 (Y+R=3.0 sec) Average Delay (sec/veh): 44.7
Optimal Cycle: OPTIMIZED Level Of Service: D

****

Approach:	North Bound			South Bound			East Bound			West Bound		
Movement:	L - T - R			L - T - R			L - T - R			L - T - R		
Control:	Prot+Permit			Prot+Permit			Protected			Protected		
Rights:	Include			Include			Include			Include		
Min. Green:	28	28	28	28	28	28	10	21	21	10	28	28
Lanes:	1 0	0 1	0	1 0	1 0	1	2 0	2 0	1	1 0	2 0	1
Volume Module:												
Base Vol:	85	147	40	222	207	141	257	978	116	147	710	192
Growth Adj:	1.00	1.00	1.00	1.00	1.00	1.00	1.00	1.00	1.00	1.00	1.00	1.00
Initial Bse:	85	147	40	222	207	141	257	978	116	147	710	192
User Adj:	1.00	1.00	1.00	1.00	1.00	1.00	1.00	1.00	1.00	1.00	1.00	1.00
PHF Adj:	0.74	0.74	0.74	0.91	0.91	0.91	0.82	0.82	0.82	0.80	0.80	0.80
PHF Volume:	116	200	54	243	227	154	314	1195	142	185	892	241
Reduct Vol:	0	0	0	0	0	0	0	0	0	0	0	0
Reduced Vol:	116	200	54	243	227	154	314	1195	142	185	892	241
PCE Adj:	1.00	1.00	1.00	1.00	1.00	1.00	1.00	1.00	1.00	1.00	1.00	1.00
MLF Adj:	1.00	1.00	1.00	1.00	1.00	1.00	1.00	1.00	1.00	1.00	1.00	1.00
FinalVolume:	116	200	54	243	227	154	314	1195	142	185	892	241
Saturation Flow Module:												
Sat/Lane:	1800	1800	1800	1800	1800	1800	1800	1800	1800	1800	1800	1800
Adjustment:	0.94	1.00	1.00	0.94	1.00	1.00	0.89	1.00	1.00	0.94	1.00	1.00
Lanes:	1.00	0.79	0.21	1.00	1.00	1.00	2.00	2.00	1.00	1.00	2.00	1.00
Final Sat.:	1700	1415	385	1700	1800	1800	3200	3600	1800	1700	3600	1800
Capacity Analysis Module:												
Vol/Sat:	0.00	0.14	0.14	0.00	0.13	0.09	0.10	0.33	0.08	0.11	0.25	0.13
Crit Moves:		****		****				****		****		
Green/Cycle:	0.22	0.22	0.22	0.22	0.22	0.22	0.14	0.38	0.38	0.13	0.36	0.36
Volume/Cap:	0.32	0.66	0.66	0.66	0.58	0.40	0.68	0.87	0.21	0.87	0.68	0.37
Delay/Veh:	43.4	50.6	50.6	51.2	48.1	44.4	57.0	43.3	27.1	85.2	36.5	30.7
User DelAdj:	1.00	1.00	1.00	1.00	1.00	1.00	1.00	1.00	1.00	1.00	1.00	1.00
AdjDel/Veh:	43.4	50.6	50.6	51.2	48.1	44.4	57.0	43.3	27.1	85.2	36.5	30.7
LOS by Move:	D	D	D	D	D	D	E	D	C	F	D	C
HCM2kAvgQ:	4	10	10	10	9	5	8	25	4	10	16	7

****

Note: Queue reported is the number of cars per lane.

****

LLUH Campus Transformation Project
Year 2023 Without Project
Evening Peak Hour

Level Of Service Computation Report
2000 HCM Operations Method (Base Volume Alternative)

****

Intersection #14 Anderson Street (NS) at Barton Road (EW)

****

Cycle (sec): 115 Critical Vol./Cap.(X): 0.922
Loss Time (sec): 8 (Y+R=3.0 sec) Average Delay (sec/veh): 41.2
Optimal Cycle: OPTIMIZED Level Of Service: D

****

Approach:	North Bound			South Bound			East Bound			West Bound		
Movement:	L - T - R			L - T - R			L - T - R			L - T - R		
Control:	Prot+Permit			Prot+Permit			Protected			Protected		
Rights:	Include			Include			Include			Include		
Min. Green:	28	28	28	28	28	28	10	21	21	10	28	28
Lanes:	1 0	0 1	0	1 0	1 0	1	2 0	2 0	1	1 0	2 0	1
Volume Module:												
Base Vol:	197	144	82	286	122	320	179	857	55	57	983	217
Growth Adj:	1.00	1.00	1.00	1.00	1.00	1.00	1.00	1.00	1.00	1.00	1.00	1.00
Initial Bse:	197	144	82	286	122	320	179	857	55	57	983	217
User Adj:	1.00	1.00	1.00	1.00	1.00	1.00	1.00	1.00	1.00	1.00	1.00	1.00
PHF Adj:	0.73	0.73	0.73	0.90	0.90	0.90	0.90	0.90	0.90	0.96	0.96	0.96
PHF Volume:	271	198	113	316	135	354	200	956	61	59	1023	226
Reduct Vol:	0	0	0	0	0	0	0	0	0	0	0	0
Reduced Vol:	271	198	113	316	135	354	200	956	61	59	1023	226
PCE Adj:	1.00	1.00	1.00	1.00	1.00	1.00	1.00	1.00	1.00	1.00	1.00	1.00
MLF Adj:	1.00	1.00	1.00	1.00	1.00	1.00	1.00	1.00	1.00	1.00	1.00	1.00
FinalVolume:	271	198	113	316	135	354	200	956	61	59	1023	226
Saturation Flow Module:												
Sat/Lane:	1800	1800	1800	1800	1800	1800	1800	1800	1800	1800	1800	1800
Adjustment:	0.94	1.00	1.00	0.94	1.00	1.00	0.89	1.00	1.00	0.94	1.00	1.00
Lanes:	1.00	0.64	0.36	1.00	1.00	1.00	2.00	2.00	1.00	1.00	2.00	1.00
Final Sat.:	1700	1147	653	1700	1800	1800	3200	3600	1800	1700	3600	1800
Capacity Analysis Module:												
Vol/Sat:	0.00	0.17	0.17	0.00	0.07	0.20	0.06	0.27	0.03	0.03	0.28	0.13
Crit Moves:		****		****			****				****	
Green/Cycle:	0.24	0.24	0.24	0.24	0.24	0.24	0.09	0.33	0.33	0.11	0.36	0.36
Volume/Cap:	0.66	0.71	0.71	0.76	0.31	0.81	0.72	0.79	0.10	0.32	0.80	0.35
Delay/Veh:	43.0	45.2	45.2	48.6	36.0	51.6	59.8	38.5	26.5	48.2	36.8	27.6
User DelAdj:	1.00	1.00	1.00	1.00	1.00	1.00	1.00	1.00	1.00	1.00	1.00	1.00
AdjDel/Veh:	43.0	45.2	45.2	48.6	36.0	51.6	59.8	38.5	26.5	48.2	36.8	27.6
LOS by Move:	D	D	D	D	D	D	E	D	C	D	D	C
HCM2kAvgQ:	10	11	11	13	4	14	5	17	1	2	18	6

****

Note: Queue reported is the number of cars per lane.

****

Opening Year (2023) With Project

LLUH Campus Transformation Project
Year 2023 With Project
Morning Peak Hour

Level Of Service Computation Report
2000 HCM 4-Way Stop Method (Base Volume Alternative)

****

Intersection #1 Campus Street (NS) at Stewart Street (EW)

****

Cycle (sec):	0	Critical Vol./Cap.(X):	1.544
Loss Time (sec):	0 (Y+R=4.0 sec)	Average Delay (sec/veh):	106.1
Optimal Cycle:	0	Level Of Service:	F

****

Approach:	North Bound			South Bound			East Bound			West Bound		
Movement:	L - T - R			L - T - R			L - T - R			L - T - R		
Control:	Stop Sign			Stop Sign			Stop Sign			Stop Sign		
Rights:	Include			Include			Include			Include		
Min. Green:	0	0	0	0	0	0	0	0	0	0	0	0
Lanes:	0 1	0 0	1	0 0	1! 0	0	0 0	1! 0	0	0 1	0 0	1
Volume Module:												
Base Vol:	14	271	333	12	37	2	76	150	44	529	54	297
Growth Adj:	1.00	1.00	1.00	1.00	1.00	1.00	1.00	1.00	1.00	1.00	1.00	1.00
Initial Bse:	14	271	333	12	37	2	76	150	44	529	54	297
User Adj:	1.00	1.00	1.00	1.00	1.00	1.00	1.00	1.00	1.00	1.00	1.00	1.00
PHF Adj:	0.79	0.79	0.79	0.85	0.85	0.85	0.68	0.68	0.68	0.85	0.85	0.85
PHF Volume:	18	344	423	14	44	2	112	221	65	625	64	351
Reduct Vol:	0	0	0	0	0	0	0	0	0	0	0	0
Reduced Vol:	18	344	423	14	44	2	112	221	65	625	64	351
PCE Adj:	1.00	1.00	1.00	1.00	1.00	1.00	1.00	1.00	1.00	1.00	1.00	1.00
MLF Adj:	1.00	1.00	1.00	1.00	1.00	1.00	1.00	1.00	1.00	1.00	1.00	1.00
FinalVolume:	18	344	423	14	44	2	112	221	65	625	64	351
Saturation Flow Module:												
Adjustment:	1.00	1.00	1.00	1.00	1.00	1.00	1.00	1.00	1.00	1.00	1.00	1.00
Lanes:	0.05	0.95	1.00	0.23	0.73	0.04	0.28	0.56	0.16	0.91	0.09	1.00
Final Sat.:	23	442	512	87	268	14	132	260	76	405	41	519
Capacity Analysis Module:												
Vol/Sat:	0.78	0.78	0.83	0.16	0.16	0.16	0.85	0.85	0.85	1.54	1.54	0.68
Crit Moves:			****	****				****			****	
Delay/Veh:	32.6	32.6	34.6	14.0	14.0	14.0	40.7	40.7	40.7	276.8	277	22.8
Delay Adj:	1.00	1.00	1.00	1.00	1.00	1.00	1.00	1.00	1.00	1.00	1.00	1.00
AdjDel/Veh:	32.6	32.6	34.6	14.0	14.0	14.0	40.7	40.7	40.7	276.8	277	22.8
LOS by Move:	D	D	D	B	B	B	E	E	E	F	F	C
ApproachDel:		33.6			14.0			40.7			191.1	
Delay Adj:		1.00			1.00			1.00			1.00	
ApprAdjDel:		33.6			14.0			40.7			191.1	
LOS by Appr:		D			B			E			F	
AllWayAvgQ:	2.9	2.9	3.5	0.2	0.2	0.2	3.9	3.9	3.9	33.0	33.0	1.9

****

Note: Queue reported is the number of cars per lane.

****

LLUH Campus Transformation Project
Year 2023 With Project
Evening Peak Hour

Level Of Service Computation Report
2000 HCM 4-Way Stop Method (Base Volume Alternative)

Intersection #1 Campus Street (NS) at Stewart Street (EW)

Cycle (sec):	0	Critical Vol./Cap.(X):	1.247
Loss Time (sec):	0 (Y+R=4.0 sec)	Average Delay (sec/veh):	81.2
Optimal Cycle:	0	Level Of Service:	F

Approach:	North Bound			South Bound			East Bound			West Bound		
Movement:	L	T	R	L	T	R	L	T	R	L	T	R
Control:	Stop Sign			Stop Sign			Stop Sign			Stop Sign		
Rights:	Include			Include			Include			Include		
Min. Green:	0	0	0	0	0	0	0	0	0	0	0	0
Lanes:	0 1	0 0	1	0 0	1! 0	0	0 0	1! 0	0	0 1	0 0	1
Volume Module:												
Base Vol:	37	92	437	129	239	32	10	50	40	328	141	103
Growth Adj:	1.00	1.00	1.00	1.00	1.00	1.00	1.00	1.00	1.00	1.00	1.00	1.00
Initial Bse:	37	92	437	129	239	32	10	50	40	328	141	103
User Adj:	1.00	1.00	1.00	1.00	1.00	1.00	1.00	1.00	1.00	1.00	1.00	1.00
PHF Adj:	0.94	0.94	0.94	0.91	0.91	0.91	0.66	0.66	0.66	0.89	0.89	0.89
PHF Volume:	39	97	463	141	261	35	15	75	60	368	158	116
Reduct Vol:	0	0	0	0	0	0	0	0	0	0	0	0
Reduced Vol:	39	97	463	141	261	35	15	75	60	368	158	116
PCE Adj:	1.00	1.00	1.00	1.00	1.00	1.00	1.00	1.00	1.00	1.00	1.00	1.00
MLF Adj:	1.00	1.00	1.00	1.00	1.00	1.00	1.00	1.00	1.00	1.00	1.00	1.00
FinalVolume:	39	97	463	141	261	35	15	75	60	368	158	116
Saturation Flow Module:												
Adjustment:	1.00	1.00	1.00	1.00	1.00	1.00	1.00	1.00	1.00	1.00	1.00	1.00
Lanes:	0.29	0.71	1.00	0.32	0.60	0.08	0.10	0.50	0.40	0.70	0.30	1.00
Final Sat.:	124	308	480	139	258	35	38	189	152	295	127	481
Capacity Analysis Module:												
Vol/Sat:	0.32	0.32	0.96	1.01	1.01	1.01	0.40	0.40	0.40	1.25	1.25	0.24
Crit Moves:			****	****				****			****	
Delay/Veh:	14.8	14.8	59.6	75.4	75.4	75.4	18.5	18.5	18.5	155.1	155	12.5
Delay Adj:	1.00	1.00	1.00	1.00	1.00	1.00	1.00	1.00	1.00	1.00	1.00	1.00
AdjDel/Veh:	14.8	14.8	59.6	75.4	75.4	75.4	18.5	18.5	18.5	155.1	155	12.5
LOS by Move:	B	B	F	F	F	F	C	C	C	F	F	B
ApproachDel:		49.4			75.4			18.5			129.4	
Delay Adj:		1.00			1.00			1.00			1.00	
ApprAdjDel:		49.4			75.4			18.5			129.4	
LOS by Appr:		E			F			C			F	
AllWayAvgQ:	0.5	0.5	6.6	7.7	7.7	7.7	0.6	0.6	0.6	16.9	16.9	0.3

Note: Queue reported is the number of cars per lane.

LLUH Campus Transformation Project
Year 2023 With Project
Morning Peak Hour - With Improvements

Level Of Service Computation Report
2000 HCM Operations Method (Base Volume Alternative)

Intersection #1 Campus Street (NS) at Stewart Street (EW)

Cycle (sec): 60 Critical Vol./Cap.(X): 0.662
Loss Time (sec): 4 (Y+R=3.0 sec) Average Delay (sec/veh): 11.9
Optimal Cycle: OPTIMIZED Level Of Service: B

Approach:	North Bound			South Bound			East Bound			West Bound		
Movement:	L -	T -	R	L -	T -	R	L -	T -	R	L -	T -	R
Control:	Permitted			Permitted			Permitted			Permitted		
Rights:	Include			Include			Include			Include		
Min. Green:	18	18	18	18	18	18	18	18	18	18	18	18
Lanes:	0 1	0 0	1	0 0	1! 0	0	0 0	1! 0	0	0 1	0 0	1
Volume Module:												
Base Vol:	14	271	333	12	37	2	76	150	44	529	54	297
Growth Adj:	1.00	1.00	1.00	1.00	1.00	1.00	1.00	1.00	1.00	1.00	1.00	1.00
Initial Bse:	14	271	333	12	37	2	76	150	44	529	54	297
User Adj:	1.00	1.00	1.00	1.00	1.00	1.00	1.00	1.00	1.00	1.00	1.00	1.00
PHF Adj:	0.79	0.79	0.79	0.85	0.85	0.85	0.68	0.68	0.68	0.85	0.85	0.85
PHF Volume:	18	344	423	14	44	2	112	221	65	625	64	351
Reduct Vol:	0	0	0	0	0	0	0	0	0	0	0	0
Reduced Vol:	18	344	423	14	44	2	112	221	65	625	64	351
PCE Adj:	1.00	1.00	1.00	1.00	1.00	1.00	1.00	1.00	1.00	1.00	1.00	1.00
MLF Adj:	1.00	1.00	1.00	1.00	1.00	1.00	1.00	1.00	1.00	1.00	1.00	1.00
FinalVolume:	18	344	423	14	44	2	112	221	65	625	64	351
Saturation Flow Module:												
Sat/Lane:	1800	1800	1800	1800	1800	1800	1800	1800	1800	1800	1800	1800
Adjustment:	1.00	1.00	1.00	1.00	1.00	1.00	1.00	1.00	1.00	1.00	1.00	1.00
Lanes:	0.05	0.95	1.00	0.23	0.73	0.04	0.28	0.56	0.16	0.91	0.09	1.00
Final Sat.:	88	1712	1800	424	1306	71	507	1000	293	1633	167	1800
Capacity Analysis Module:												
Vol/Sat:	0.20	0.20	0.23	0.03	0.03	0.03	0.22	0.22	0.22	0.38	0.38	0.20
Crit Moves:			****								****	
Green/Cycle:	0.35	0.35	0.35	0.35	0.35	0.35	0.58	0.58	0.58	0.58	0.58	0.58
Volume/Cap:	0.57	0.57	0.66	0.09	0.09	0.09	0.38	0.38	0.38	0.66	0.66	0.34
Delay/Veh:	16.8	16.8	18.9	13.0	13.0	13.0	7.1	7.1	7.1	10.2	10.2	6.8
User DelAdj:	1.00	1.00	1.00	1.00	1.00	1.00	1.00	1.00	1.00	1.00	1.00	1.00
AdjDel/Veh:	16.8	16.8	18.9	13.0	13.0	13.0	7.1	7.1	7.1	10.2	10.2	6.8
LOS by Move:	B	B	B	B	B	B	A	A	A	B	B	A
HCM2kAvgQ:	6	6	8	1	1	1	4	4	4	10	10	4

Note: Queue reported is the number of cars per lane.

LLUH Campus Transformation Project
Year 2023 With Project
Evening Peak Hour - With Improvements

Level Of Service Computation Report
2000 HCM Operations Method (Base Volume Alternative)

Intersection #1 Campus Street (NS) at Stewart Street (EW)

Cycle (sec): 60 Critical Vol./Cap.(X): 0.589
Loss Time (sec): 4 (Y+R=3.0 sec) Average Delay (sec/veh): 12.1
Optimal Cycle: OPTIMIZED Level Of Service: B

Approach:	North Bound			South Bound			East Bound			West Bound		
Movement:	L - T - R			L - T - R			L - T - R			L - T - R		
Control:	Permitted			Permitted			Permitted			Permitted		
Rights:	Include			Include			Include			Include		
Min. Green:	18	18	18	18	18	18	18	18	18	18	18	18
Lanes:	0 1	0 0	1	0 0	1! 0	0	0 0	1! 0	0	0 1	0 0	1
Volume Module:												
Base Vol:	37	92	437	129	239	32	10	50	40	328	141	103
Growth Adj:	1.00	1.00	1.00	1.00	1.00	1.00	1.00	1.00	1.00	1.00	1.00	1.00
Initial Bse:	37	92	437	129	239	32	10	50	40	328	141	103
User Adj:	1.00	1.00	1.00	1.00	1.00	1.00	1.00	1.00	1.00	1.00	1.00	1.00
PHF Adj:	0.94	0.94	0.94	0.91	0.91	0.91	0.66	0.66	0.66	0.89	0.89	0.89
PHF Volume:	39	97	463	141	261	35	15	75	60	368	158	116
Reduct Vol:	0	0	0	0	0	0	0	0	0	0	0	0
Reduced Vol:	39	97	463	141	261	35	15	75	60	368	158	116
PCE Adj:	1.00	1.00	1.00	1.00	1.00	1.00	1.00	1.00	1.00	1.00	1.00	1.00
MLF Adj:	1.00	1.00	1.00	1.00	1.00	1.00	1.00	1.00	1.00	1.00	1.00	1.00
FinalVolume:	39	97	463	141	261	35	15	75	60	368	158	116
Saturation Flow Module:												
Sat/Lane:	1800	1800	1800	1800	1800	1800	1800	1800	1800	1800	1800	1800
Adjustment:	1.00	1.00	1.00	1.00	1.00	1.00	1.00	1.00	1.00	1.00	1.00	1.00
Lanes:	0.29	0.71	1.00	0.32	0.60	0.08	0.10	0.50	0.40	0.70	0.30	1.00
Final Sat.:	516	1284	1800	581	1076	144	180	900	720	1259	541	1800
Capacity Analysis Module:												
Vol/Sat:	0.08	0.08	0.26	0.24	0.24	0.24	0.08	0.08	0.08	0.29	0.29	0.06
Crit Moves:			****								****	
Green/Cycle:	0.44	0.44	0.44	0.44	0.44	0.44	0.50	0.50	0.50	0.50	0.50	0.50
Volume/Cap:	0.17	0.17	0.59	0.56	0.56	0.56	0.17	0.17	0.17	0.59	0.59	0.13
Delay/Veh:	10.4	10.4	14.0	13.5	13.5	13.5	8.4	8.4	8.4	11.8	11.8	8.2
User DelAdj:	1.00	1.00	1.00	1.00	1.00	1.00	1.00	1.00	1.00	1.00	1.00	1.00
AdjDel/Veh:	10.4	10.4	14.0	13.5	13.5	13.5	8.4	8.4	8.4	11.8	11.8	8.2
LOS by Move:	B	B	B	B	B	B	A	A	A	B	B	A
HCM2kAvgQ:	2	2	7	7	7	7	2	2	2	8	8	1

Note: Queue reported is the number of cars per lane.

LLUH Campus Transformation Project
Year 2023 With Project
Morning Peak Hour

Level Of Service Computation Report
2000 HCM 4-Way Stop Method (Base Volume Alternative)

Intersection #2 Campus Street (NS) at University Avenue (EW)

Cycle (sec):	0	Critical Vol./Cap.(X):	1.211
Loss Time (sec):	0 (Y+R=4.0 sec)	Average Delay (sec/veh):	96.3
Optimal Cycle:	0	Level Of Service:	F

Approach:	North Bound			South Bound			East Bound			West Bound		
Movement:	L	T	R	L	T	R	L	T	R	L	T	R
Control:	Stop Sign			Stop Sign			Stop Sign			Stop Sign		
Rights:	Include			Include			Include			Include		
Min. Green:	0	0	0	0	0	0	0	0	0	0	0	0
Lanes:	0 1	0 0	0	0 0	0 1	0	0 0	1! 0	0	0 0	0 0	0
Volume Module:												
Base Vol:	60	401	0	0	391	177	248	0	146	0	0	0
Growth Adj:	1.00	1.00	1.00	1.00	1.00	1.00	1.00	1.00	1.00	1.00	1.00	1.00
Initial Bse:	60	401	0	0	391	177	248	0	146	0	0	0
User Adj:	1.00	1.00	1.00	1.00	1.00	1.00	1.00	1.00	1.00	1.00	1.00	1.00
PHF Adj:	0.76	0.76	0.76	0.84	0.84	0.84	0.82	0.82	0.82	1.00	1.00	1.00
PHF Volume:	79	527	0	0	468	212	301	0	177	0	0	0
Reduct Vol:	0	0	0	0	0	0	0	0	0	0	0	0
Reduced Vol:	79	527	0	0	468	212	301	0	177	0	0	0
PCE Adj:	1.00	1.00	1.00	1.00	1.00	1.00	1.00	1.00	1.00	1.00	1.00	1.00
MLF Adj:	1.00	1.00	1.00	1.00	1.00	1.00	1.00	1.00	1.00	1.00	1.00	1.00
FinalVolume:	79	527	0	0	468	212	301	0	177	0	0	0
Saturation Flow Module:												
Adjustment:	1.00	1.00	1.00	1.00	1.00	1.00	1.00	1.00	1.00	1.00	1.00	1.00
Lanes:	0.13	0.87	0.00	0.00	0.69	0.31	0.63	0.00	0.37	0.00	0.00	0.00
Final Sat.:	71	472	0	0	386	175	340	0	200	0	0	0
Capacity Analysis Module:												
Vol/Sat:	1.12	1.12	xxxx	xxxx	1.21	1.21	0.89	xxxx	0.89	xxxx	xxxx	xxxx
Crit Moves:		****			****		****					
Delay/Veh:	98.8	98.8	0.0	0.0	133	132.6	41.5	0.0	41.5	0.0	0.0	0.0
Delay Adj:	1.00	1.00	1.00	1.00	1.00	1.00	1.00	1.00	1.00	1.00	1.00	1.00
AdjDel/Veh:	98.8	98.8	0.0	0.0	133	132.6	41.5	0.0	41.5	0.0	0.0	0.0
LOS by Move:	F	F	*	*	F	F	E	*	E	*	*	*
ApproachDel:		98.8			132.6			41.5			xxxxxx	
Delay Adj:		1.00			1.00			1.00			xxxxx	
ApprAdjDel:		98.8			132.6			41.5			xxxxxx	
LOS by Appr:		F			F			E			*	
AllWayAvgQ:	13.5	13.5	13.5	19.2	19.2	19.2	4.8	4.8	4.8	0.0	0.0	0.0

Note: Queue reported is the number of cars per lane.

LLUH Campus Transformation Project
Year 2023 With Project
Evening Peak Hour

Level Of Service Computation Report
2000 HCM 4-Way Stop Method (Base Volume Alternative)

Intersection #2 Campus Street (NS) at University Avenue (EW)

Cycle (sec): 0 Critical Vol./Cap.(X): 0.945
Loss Time (sec): 0 (Y+R=4.0 sec) Average Delay (sec/veh): 35.3
Optimal Cycle: 0 Level Of Service: E

Approach:	North Bound				South Bound				East Bound				West Bound			
Movement:	L	- T	- R		L	- T	- R		L	- T	- R		L	- T	- R	
Control:	Stop Sign				Stop Sign				Stop Sign				Stop Sign			
Rights:	Include				Include				Include				Include			
Min. Green:	0	0	0		0	0	0		0	0	0		0	0	0	
Lanes:	0 1	0 0	0		0 0	0 1	0		0 0	1! 0	0		0 0	0 0	0	
Volume Module:																
Base Vol:	105	387	0		0	372	215		133	0	65		0	0	0	
Growth Adj:	1.00	1.00	1.00		1.00	1.00	1.00		1.00	1.00	1.00		1.00	1.00	1.00	
Initial Bse:	105	387	0		0	372	215		133	0	65		0	0	0	
User Adj:	1.00	1.00	1.00		1.00	1.00	1.00		1.00	1.00	1.00		1.00	1.00	1.00	
PHF Adj:	0.89	0.89	0.89		0.91	0.91	0.91		0.82	0.82	0.82		1.00	1.00	1.00	
PHF Volume:	118	436	0		0	407	235		162	0	79		0	0	0	
Reduct Vol:	0	0	0		0	0	0		0	0	0		0	0	0	
Reduced Vol:	118	436	0		0	407	235		162	0	79		0	0	0	
PCE Adj:	1.00	1.00	1.00		1.00	1.00	1.00		1.00	1.00	1.00		1.00	1.00	1.00	
MLF Adj:	1.00	1.00	1.00		1.00	1.00	1.00		1.00	1.00	1.00		1.00	1.00	1.00	
FinalVolume:	118	436	0		0	407	235		162	0	79		0	0	0	
Saturation Flow Module:																
Adjustment:	1.00	1.00	1.00		1.00	1.00	1.00		1.00	1.00	1.00		1.00	1.00	1.00	
Lanes:	0.21	0.79	0.00		0.00	0.63	0.37		0.67	0.00	0.33		0.00	0.00	0.00	
Final Sat.:	136	500	0		0	431	249		362	0	177		0	0	0	
Capacity Analysis Module:																
Vol/Sat:	0.87	0.87	xxxx		xxxx	0.95	0.95		0.45	xxxx	0.45		xxxx	xxxx	xxxx	
Crit Moves:		****					****		****							
Delay/Veh:	33.9	33.9	0.0		0.0	44.3	44.3		14.3	0.0	14.3		0.0	0.0	0.0	
Delay Adj:	1.00	1.00	1.00		1.00	1.00	1.00		1.00	1.00	1.00		1.00	1.00	1.00	
AdjDel/Veh:	33.9	33.9	0.0		0.0	44.3	44.3		14.3	0.0	14.3		0.0	0.0	0.0	
LOS by Move:	D	D	*		*	E	E		B	*	B		*	*	*	
ApproachDel:		33.9				44.3				14.3				xxxxxx		
Delay Adj:		1.00				1.00				1.00				xxxxx		
ApprAdjDel:		33.9				44.3				14.3				xxxxxx		
LOS by Appr:		D				E				B				*		
AllWayAvgQ:	4.5	4.5	4.5		6.8	6.8	6.8		0.7	0.7	0.7		0.0	0.0	0.0	

Note: Queue reported is the number of cars per lane.

LLUH Campus Transformation Project
Year 2023 With Project
Morning Peak Hour - With Improvements

Level Of Service Computation Report
2000 HCM Operations Method (Base Volume Alternative)

****

Intersection #2 Campus Street (NS) at University Avenue (EW)

****

Cycle (sec): 60 Critical Vol./Cap.(X): 0.689
Loss Time (sec): 4 (Y+R=3.0 sec) Average Delay (sec/veh): 13.2
Optimal Cycle: OPTIMIZED Level Of Service: B

****

Approach:	North Bound			South Bound			East Bound			West Bound		
Movement:	L	T	R	L	T	R	L	T	R	L	T	R
Control:	Permitted			Permitted			Permitted			Permitted		
Rights:	Include			Include			Include			Include		
Min. Green:	18	18	0	0	18	18	18	0	18	0	0	0
Lanes:	0 1	0 0	0	0 0	0 1	0	0 0	1! 0	0	0 0	0 0	0
Volume Module:												
Base Vol:	60	401	0	0	391	177	248	0	146	0	0	0
Growth Adj:	1.00	1.00	1.00	1.00	1.00	1.00	1.00	1.00	1.00	1.00	1.00	1.00
Initial Bse:	60	401	0	0	391	177	248	0	146	0	0	0
User Adj:	1.00	1.00	1.00	1.00	1.00	1.00	1.00	1.00	1.00	1.00	1.00	1.00
PHF Adj:	0.76	0.76	0.76	0.84	0.84	0.84	0.82	0.82	0.82	1.00	1.00	1.00
PHF Volume:	79	527	0	0	468	212	301	0	177	0	0	0
Reduct Vol:	0	0	0	0	0	0	0	0	0	0	0	0
Reduced Vol:	79	527	0	0	468	212	301	0	177	0	0	0
PCE Adj:	1.00	1.00	1.00	1.00	1.00	1.00	1.00	1.00	1.00	1.00	1.00	1.00
MLF Adj:	1.00	1.00	1.00	1.00	1.00	1.00	1.00	1.00	1.00	1.00	1.00	1.00
FinalVolume:	79	527	0	0	468	212	301	0	177	0	0	0
Saturation Flow Module:												
Sat/Lane:	1800	1800	1800	1800	1800	1800	1800	1800	1800	1800	1800	1800
Adjustment:	1.00	1.00	1.00	0.94	1.00	1.00	1.00	1.00	1.00	0.94	1.00	1.00
Lanes:	0.13	0.87	0.00	0.00	0.69	0.31	0.63	0.00	0.37	0.00	0.00	0.00
Final Sat.:	234	1566	0	0	1239	561	1133	0	667	0	0	0
Capacity Analysis Module:												
Vol/Sat:	0.34	0.34	0.00	0.00	0.38	0.38	0.27	0.00	0.27	0.00	0.00	0.00
Crit Moves:					****		****					
Green/Cycle:	0.55	0.55	0.00	0.00	0.55	0.55	0.39	0.00	0.39	0.00	0.00	0.00
Volume/Cap:	0.61	0.61	0.00	0.00	0.69	0.69	0.69	0.00	0.69	0.00	0.00	0.00
Delay/Veh:	10.4	10.4	0.0	0.0	12.0	12.0	18.4	0.0	18.4	0.0	0.0	0.0
User DelAdj:	1.00	1.00	1.00	1.00	1.00	1.00	1.00	1.00	1.00	1.00	1.00	1.00
AdjDel/Veh:	10.4	10.4	0.0	0.0	12.0	12.0	18.4	0.0	18.4	0.0	0.0	0.0
LOS by Move:	B	B	A	A	B	B	B	A	B	A	A	A
HCM2kAvgQ:	8	8	0	0	10	10	9	0	9	0	0	0

****

Note: Queue reported is the number of cars per lane.

****

LLUH Campus Transformation Project
Year 2023 With Project
Evening Peak Hour - With Improvements

Level Of Service Computation Report
2000 HCM Operations Method (Base Volume Alternative)

Intersection #2 Campus Street (NS) at University Avenue (EW)

Cycle (sec): 65 Critical Vol./Cap.(X): 0.523
Loss Time (sec): 4 (Y+R=3.0 sec) Average Delay (sec/veh): 8.4
Optimal Cycle: OPTIMIZED Level Of Service: A

Approach:	North Bound				South Bound				East Bound				West Bound			
Movement:	L	-	T	- R	L	-	T	- R	L	-	T	- R	L	-	T	- R
Control:	Permitted				Permitted				Permitted				Permitted			
Rights:	Include				Include				Include				Include			
Min. Green:	18	18	0		0	18	18		18	0	18		0	0	0	
Lanes:	0 1	0 0	0		0 0	0 1	0		0 0	1! 0	0		0 0	0 0	0	
Volume Module:																
Base Vol:	105	387	0	0	372	215	133	0	65	0	0	0				
Growth Adj:	1.00	1.00	1.00	1.00	1.00	1.00	1.00	1.00	1.00	1.00	1.00	1.00				
Initial Bse:	105	387	0	0	372	215	133	0	65	0	0	0				
User Adj:	1.00	1.00	1.00	1.00	1.00	1.00	1.00	1.00	1.00	1.00	1.00	1.00				
PHF Adj:	0.89	0.89	0.89	0.91	0.91	0.91	0.82	0.82	0.82	1.00	1.00	1.00				
PHF Volume:	118	436	0	0	407	235	162	0	79	0	0	0				
Reduct Vol:	0	0	0	0	0	0	0	0	0	0	0	0				
Reduced Vol:	118	436	0	0	407	235	162	0	79	0	0	0				
PCE Adj:	1.00	1.00	1.00	1.00	1.00	1.00	1.00	1.00	1.00	1.00	1.00	1.00				
MLF Adj:	1.00	1.00	1.00	1.00	1.00	1.00	1.00	1.00	1.00	1.00	1.00	1.00				
FinalVolume:	118	436	0	0	407	235	162	0	79	0	0	0				
Saturation Flow Module:																
Sat/Lane:	1800	1800	1800	1800	1800	1800	1800	1800	1800	1800	1800	1800				
Adjustment:	1.00	1.00	1.00	0.94	1.00	1.00	1.00	1.00	1.00	0.94	1.00	1.00				
Lanes:	0.21	0.79	0.00	0.00	0.63	0.37	0.67	0.00	0.33	0.00	0.00	0.00				
Final Sat.:	384	1416	0	0	1141	659	1209	0	591	0	0	0				
Capacity Analysis Module:																
Vol/Sat:	0.31	0.31	0.00	0.00	0.36	0.36	0.13	0.00	0.13	0.00	0.00	0.00				
Crit Moves:					****		****									
Green/Cycle:	0.66	0.66	0.00	0.00	0.66	0.66	0.28	0.00	0.28	0.00	0.00	0.00				
Volume/Cap:	0.47	0.47	0.00	0.00	0.54	0.54	0.48	0.00	0.48	0.00	0.00	0.00				
Delay/Veh:	5.7	5.7	0.0	0.0	6.3	6.3	20.4	0.0	20.4	0.0	0.0	0.0				
User DelAdj:	1.00	1.00	1.00	1.00	1.00	1.00	1.00	1.00	1.00	1.00	1.00	1.00				
AdjDel/Veh:	5.7	5.7	0.0	0.0	6.3	6.3	20.4	0.0	20.4	0.0	0.0	0.0				
LOS by Move:	A	A	A	A	A	A	C	A	C	A	A	A				
HCM2kAvgQ:	6	6	0	0	7	7	5	0	5	0	0	0				

Note: Queue reported is the number of cars per lane.

LLUH Campus Transformation Project
Year 2023 With Project
Morning Peak Hour - With Improvements

Level Of Service Computation Report
2000 HCM Operations Method (Base Volume Alternative)

Intersection #3 Campus Street (NS) at Prospect Avenue (EW)

Cycle (sec):	60	Critical Vol./Cap.(X):	0.447
Loss Time (sec):	4 (Y+R=3.0 sec)	Average Delay (sec/veh):	9.3
Optimal Cycle: OPTIMIZED		Level Of Service:	A

Approach:	North Bound			South Bound			East Bound			West Bound		
Movement:	L -	T -	R	L -	T -	R	L -	T -	R	L -	T -	R
Control:	Permitted			Permitted			Permitted			Permitted		
Rights:	Include			Include			Include			Include		
Min. Green:	18	18	18	18	18	18	21	21	21	0	0	0
Lanes:	1 0	1 0	0	0 0	1 0	1	0 0	1! 0	0	0 0	0 0	0
Volume Module:												
Base Vol:	225	363	0	0	396	44	190	0	46	0	0	0
Growth Adj:	1.00	1.00	1.00	1.00	1.00	1.00	1.00	1.00	1.00	1.00	1.00	1.00
Initial Bse:	225	363	0	0	396	44	190	0	46	0	0	0
User Adj:	1.00	1.00	1.00	1.00	1.00	1.00	1.00	1.00	1.00	1.00	1.00	1.00
PHF Adj:	0.82	0.82	0.82	0.89	0.89	0.89	0.77	0.77	0.77	1.00	1.00	1.00
PHF Volume:	274	443	0	0	443	49	248	0	60	0	0	0
Reduct Vol:	0	0	0	0	0	0	0	0	0	0	0	0
Reduced Vol:	274	443	0	0	443	49	248	0	60	0	0	0
PCE Adj:	1.00	1.00	1.00	1.00	1.00	1.00	1.00	1.00	1.00	1.00	1.00	1.00
MLF Adj:	1.00	1.00	1.00	1.00	1.00	1.00	1.00	1.00	1.00	1.00	1.00	1.00
FinalVolume:	274	443	0	0	443	49	248	0	60	0	0	0
Saturation Flow Module:												
Sat/Lane:	1800	1800	1800	1800	1800	1800	1800	1800	1800	1800	1800	1800
Adjustment:	0.94	1.00	1.00	0.94	1.00	1.00	1.00	1.00	1.00	0.94	1.00	1.00
Lanes:	1.00	1.00	0.00	0.00	1.00	1.00	0.81	0.00	0.19	0.00	0.00	0.00
Final Sat.:	1700	1800	0	0	1800	1800	1449	0	351	0	0	0
Capacity Analysis Module:												
Vol/Sat:	0.16	0.25	0.00	0.00	0.25	0.03	0.17	0.00	0.17	0.00	0.00	0.00
Crit Moves:					****		****					
Green/Cycle:	0.55	0.55	0.00	0.00	0.55	0.55	0.38	0.00	0.38	0.00	0.00	0.00
Volume/Cap:	0.29	0.45	0.00	0.00	0.45	0.05	0.45	0.00	0.45	0.00	0.00	0.00
Delay/Veh:	7.4	8.4	0.0	0.0	8.4	6.3	14.2	0.0	14.2	0.0	0.0	0.0
User DelAdj:	1.00	1.00	1.00	1.00	1.00	1.00	1.00	1.00	1.00	1.00	1.00	1.00
AdjDel/Veh:	7.4	8.4	0.0	0.0	8.4	6.3	14.2	0.0	14.2	0.0	0.0	0.0
LOS by Move:	A	A	A	A	A	A	B	A	B	A	A	A
HCM2kAvgQ:	3	5	0	0	5	0	5	0	5	0	0	0

Note: Queue reported is the number of cars per lane.

LLUH Campus Transformation Project
Year 2023 With Project
Evening Peak Hour - With Improvements

Level Of Service Computation Report
2000 HCM Operations Method (Base Volume Alternative)

Intersection #3 Campus Street (NS) at Prospect Avenue (EW)

Cycle (sec): 60 Critical Vol./Cap.(X): 0.389
Loss Time (sec): 4 (Y+R=3.0 sec) Average Delay (sec/veh): 8.2
Optimal Cycle: OPTIMIZED Level Of Service: A

Approach:	North Bound			South Bound			East Bound			West Bound		
Movement:	L	T	R	L	T	R	L	T	R	L	T	R
Control:	Permitted			Permitted			Permitted			Permitted		
Rights:	Include			Include			Include			Include		
Min. Green:	18	18	18	18	18	18	21	21	21	0	0	0
Lanes:	1 0	1 0	0	0 0	1 0	1	0 0	1! 0	0	0 0	0 0	0
Volume Module:												
Base Vol:	266	386	0	0	417	24	28	0	136	0	0	0
Growth Adj:	1.00	1.00	1.00	1.00	1.00	1.00	1.00	1.00	1.00	1.00	1.00	1.00
Initial Bse:	266	386	0	0	417	24	28	0	136	0	0	0
User Adj:	1.00	1.00	1.00	1.00	1.00	1.00	1.00	1.00	1.00	1.00	1.00	1.00
PHF Adj:	0.92	0.92	0.92	0.99	0.99	0.99	0.71	0.71	0.71	1.00	1.00	1.00
PHF Volume:	289	419	0	0	423	24	39	0	191	0	0	0
Reduct Vol:	0	0	0	0	0	0	0	0	0	0	0	0
Reduced Vol:	289	419	0	0	423	24	39	0	191	0	0	0
PCE Adj:	1.00	1.00	1.00	1.00	1.00	1.00	1.00	1.00	1.00	1.00	1.00	1.00
MLF Adj:	1.00	1.00	1.00	1.00	1.00	1.00	1.00	1.00	1.00	1.00	1.00	1.00
FinalVolume:	289	419	0	0	423	24	39	0	191	0	0	0
Saturation Flow Module:												
Sat/Lane:	1800	1800	1800	1800	1800	1800	1800	1800	1800	1800	1800	1800
Adjustment:	0.94	1.00	1.00	0.94	1.00	1.00	1.00	1.00	1.00	0.94	1.00	1.00
Lanes:	1.00	1.00	0.00	0.00	1.00	1.00	0.17	0.00	0.83	0.00	0.00	0.00
Final Sat.:	1700	1800	0	0	1800	1800	307	0	1493	0	0	0
Capacity Analysis Module:												
Vol/Sat:	0.17	0.23	0.00	0.00	0.23	0.01	0.13	0.00	0.13	0.00	0.00	0.00
Crit Moves:					****		****					
Green/Cycle:	0.58	0.58	0.00	0.00	0.58	0.58	0.35	0.00	0.35	0.00	0.00	0.00
Volume/Cap:	0.29	0.40	0.00	0.00	0.40	0.02	0.37	0.00	0.37	0.00	0.00	0.00
Delay/Veh:	6.4	7.0	0.0	0.0	7.1	5.3	14.9	0.0	14.9	0.0	0.0	0.0
User DelAdj:	1.00	1.00	1.00	1.00	1.00	1.00	1.00	1.00	1.00	1.00	1.00	1.00
AdjDel/Veh:	6.4	7.0	0.0	0.0	7.1	5.3	14.9	0.0	14.9	0.0	0.0	0.0
LOS by Move:	A	A	A	A	A	A	B	A	B	A	A	A
HCM2kAvgQ:	3	4	0	0	5	0	3	0	3	0	0	0

Note: Queue reported is the number of cars per lane.

LLUH Campus Transformation Project
Year 2023 With Project
Morning Peak Hour

Level Of Service Computation Report
2000 HCM Unsignalized Method (Base Volume Alternative)

****

Intersection #4 Campus Street (NS) at San Juan Street (EW)

****

Average Delay (sec/veh): 96.4 Worst Case Level Of Service: F[439.7]

****

Approach:	North Bound			South Bound			East Bound			West Bound		
Movement:	L -	T -	R	L -	T -	R	L -	T -	R	L -	T -	R
Control:	Uncontrolled			Uncontrolled			Stop Sign			Stop Sign		
Rights:	Include			Include			Include			Include		
Lanes:	0 1	0 0	0	0 0	1 1	0	0 0	1! 0	0	0 0	0 0	0
Volume Module:												
Base Vol:	49	864	0	0	274	22	180	0	167	0	0	0
Growth Adj:	1.00	1.00	1.00	1.00	1.00	1.00	1.00	1.00	1.00	1.00	1.00	1.00
Initial Bse:	49	864	0	0	274	22	180	0	167	0	0	0
User Adj:	1.00	1.00	1.00	1.00	1.00	1.00	1.00	1.00	1.00	1.00	1.00	1.00
PHF Adj:	0.85	0.85	0.85	0.77	0.77	0.77	0.85	0.85	0.85	1.00	1.00	1.00
PHF Volume:	58	1016	0	0	356	29	212	0	196	0	0	0
Reduct Vol:	0	0	0	0	0	0	0	0	0	0	0	0
FinalVolume:	58	1016	0	0	356	29	212	0	196	0	0	0
Critical Gap Module:												
Critical Gp:	4.1	xxxx	xxxxx	xxxxx	xxxx	xxxxx	6.4	6.5	6.2	xxxxx	xxxx	xxxxx
FollowUpTim:	2.2	xxxx	xxxxx	xxxxx	xxxx	xxxxx	3.5	4.0	3.3	xxxxx	xxxx	xxxxx
Capacity Module:												
Cnflict Vol:	385	xxxx	xxxxx	xxxx	xxxx	xxxxx	1502	1502	192	xxxx	xxxx	xxxxx
Potent Cap.:	1185	xxxx	xxxxx	xxxx	xxxx	xxxxx	135	123	854	xxxx	xxxx	xxxxx
Move Cap.:	1185	xxxx	xxxxx	xxxx	xxxx	xxxxx	130	117	854	xxxx	xxxx	xxxxx
Volume/Cap:	0.05	xxxx	xxxx	xxxx	xxxx	xxxx	1.63	0.00	0.23	xxxx	xxxx	xxxx
Level Of Service Module:												
2Way95thQ:	0.2	xxxx	xxxxx	xxxx	xxxx	xxxxx	xxxx	xxxx	xxxxx	xxxx	xxxx	xxxxx
Control Del:	8.2	xxxx	xxxxx	xxxxx	xxxx	xxxxx	xxxxx	xxxx	xxxxx	xxxxx	xxxx	xxxxx
LOS by Move:	A	*	*	*	*	*	*	*	*	*	*	*
Movement:	LT -	LTR -	RT	LT -	LTR -	RT	LT -	LTR -	RT	LT -	LTR -	RT
Shared Cap.:	xxxx	xxxx	xxxxx	xxxx	xxxx	xxxxx	xxxx	220	xxxxx	xxxx	xxxx	xxxxx
SharedQueue:	0.2	xxxx	xxxxx	xxxxx	xxxx	xxxxx	xxxxx	28.9	xxxxx	xxxxx	xxxx	xxxxx
Shrd ConDel:	8.2	xxxx	xxxxx	xxxxx	xxxx	xxxxx	xxxxx	440	xxxxx	xxxxx	xxxx	xxxxx
Shared LOS:	A	*	*	*	*	*	*	F	*	*	*	*
ApproachDel:	xxxxxx			xxxxxx			439.7			xxxxxx		
ApproachLOS:	*			*			F			*		

****

Note: Queue reported is the number of cars per lane.

****

LLUH Campus Transformation Project
Year 2023 With Project
Evening Peak Hour

Level Of Service Computation Report
2000 HCM Unsignalized Method (Base Volume Alternative)

Intersection #4 Campus Street (NS) at San Juan Street (EW)

Average Delay (sec/veh): 8.1 Worst Case Level Of Service: F[65.5]

Approach:	North Bound					South Bound					East Bound					West Bound				
Movement:	L -	T -	R			L -	T -	R			L -	T -	R			L -	T -	R		
Control:	Uncontrolled					Uncontrolled					Stop Sign					Stop Sign				
Rights:	Include					Include					Include					Include				
Lanes:	0	1	0	0	0	0	0	1	1	0	0	0	1!	0	0	0	0	0	0	0
Volume Module:																				
Base Vol:	240	298	0		0	719		160			16		0		82	0		0		
Growth Adj:	1.00	1.00	1.00		1.00	1.00		1.00			1.00		1.00		1.00	1.00		1.00		
Initial Bse:	240	298	0		0	719		160			16		0		82	0		0		
User Adj:	1.00	1.00	1.00		1.00	1.00		1.00			1.00		1.00		1.00	1.00		1.00		
PHF Adj:	0.88	0.88	0.88		0.83	0.83		0.83			0.58		0.58		0.58	1.00		1.00		
PHF Volume:	273	338	0		0	869		193			27		0		141	0		0		
Reduct Vol:	0	0	0		0	0		0			0		0		0	0		0		
FinalVolume:	273	338	0		0	869		193			27		0		141	0		0		
Critical Gap Module:																				
Critical Gp:	4.1	xxxx	xxxxx	xxxxx	xxxx	xxxxx					6.4		6.5		6.2	xxxxx		xxxx		xxxxx
FollowUpTim:	2.2	xxxx	xxxxx	xxxxx	xxxx	xxxxx					3.5		4.0		3.3	xxxxx		xxxx		xxxxx
Capacity Module:																				
Cnflict Vol:	1062	xxxx	xxxxx	xxxx	xxxx	xxxxx					1849		1849		531	xxxx		xxxx		xxxxx
Potent Cap.:	663	xxxx	xxxxx	xxxx	xxxx	xxxxx					83		75		552	xxxx		xxxx		xxxxx
Move Cap.:	663	xxxx	xxxxx	xxxx	xxxx	xxxxx					51		39		552	xxxx		xxxx		xxxxx
Volume/Cap:	0.41	xxxx	xxxx	xxxx	xxxx	xxxx					0.54		0.00		0.25	xxxx		xxxx		xxxx
Level Of Service Module:																				
2Way95thQ:	2.0	xxxx	xxxxx	xxxx	xxxx	xxxxx					xxxx		xxxx		xxxxx	xxxx		xxxx		xxxxx
Control Del:	14.2	xxxx	xxxxx	xxxxx	xxxx	xxxxx					xxxxx		xxxx		xxxxx	xxxxx		xxxx		xxxxx
LOS by Move:	B	*	*	*	*	*					*		*		*	*		*		*
Movement:	LT -	LTR -	RT	LT -	LTR -	RT					LT -	LTR -	RT			LT -	LTR -	RT		
Shared Cap.:	xxxx	xxxx	xxxxx	xxxx	xxxx	xxxxx					xxxx		213		xxxxx	xxxx		xxxx		xxxxx
SharedQueue:	2.0	xxxx	xxxxx	xxxxx	xxxx	xxxxx					xxxxx		5.6		xxxxx	xxxxx		xxxx		xxxxx
Shrd ConDel:	14.2	xxxx	xxxxx	xxxxx	xxxx	xxxxx					xxxxx		65.5		xxxxx	xxxxx		xxxx		xxxxx
Shared LOS:	B	*	*	*	*	*					*		F		*	*		*		*
ApproachDel:	xxxxxx			xxxxxx							65.5					xxxxxx				
ApproachLOS:		*			*								F					*		

Note: Queue reported is the number of cars per lane.

LLUH Campus Transformation Project
Year 2023 With Project
Morning Peak Hour - With Improvements

Level Of Service Computation Report
2000 HCM Unsignalized Method (Base Volume Alternative)

Intersection #4 Campus Street (NS) at San Juan Street (EW)

Average Delay (sec/veh): 1.2 Worst Case Level Of Service: B[10.5]

Approach:	North Bound			South Bound			East Bound			West Bound		
Movement:	L - T - R			L - T - R			L - T - R			L - T - R		
Control:	Uncontrolled			Uncontrolled			Stop Sign			Stop Sign		
Rights:	Include			Include			Include			Include		
Lanes:	0 0 1 0 0			0 0 1 1 0			0 0 0 0 1			0 0 0 0 0		
Volume Module:												
Base Vol:	0	913	0	0	274	22	0	0	167	0	0	0
Growth Adj:	1.00	1.00	1.00	1.00	1.00	1.00	1.00	1.00	1.00	1.00	1.00	1.00
Initial Bse:	0	913	0	0	274	22	0	0	167	0	0	0
User Adj:	1.00	1.00	1.00	1.00	1.00	1.00	1.00	1.00	1.00	1.00	1.00	1.00
PHF Adj:	0.85	0.85	0.85	0.77	0.77	0.77	0.85	0.85	0.85	1.00	1.00	1.00
PHF Volume:	0	1074	0	0	356	29	0	0	196	0	0	0
Reduct Vol:	0	0	0	0	0	0	0	0	0	0	0	0
FinalVolume:	0	1074	0	0	356	29	0	0	196	0	0	0
Critical Gap Module:												
Critical Gp:	xxxxx	xxxx	xxxxx	xxxxx	xxxx	xxxxx	xxxxx	xxxx	6.2	xxxxx	xxxx	xxxxx
FollowUpTim:	xxxxx	xxxx	xxxxx	xxxxx	xxxx	xxxxx	xxxxx	xxxx	3.3	xxxxx	xxxx	xxxxx
Capacity Module:												
Cnflict Vol:	xxxx	xxxx	xxxxx	xxxx	xxxx	xxxxx	xxxx	xxxx	192	xxxx	xxxx	xxxxx
Potent Cap.:	xxxx	xxxx	xxxxx	xxxx	xxxx	xxxxx	xxxx	xxxx	854	xxxx	xxxx	xxxxx
Move Cap.:	xxxx	xxxx	xxxxx	xxxx	xxxx	xxxxx	xxxx	xxxx	854	xxxx	xxxx	xxxxx
Volume/Cap:	xxxx	xxxx	xxxx	xxxx	xxxx	xxxx	xxxx	xxxx	0.23	xxxx	xxxx	xxxx
Level Of Service Module:												
2Way95thQ:	xxxx	xxxx	xxxxx	xxxx	xxxx	xxxxx	xxxx	xxxx	0.9	xxxx	xxxx	xxxxx
Control Del:	xxxxx	xxxx	xxxxx	xxxxx	xxxx	xxxxx	xxxxx	xxxx	10.5	xxxxx	xxxx	xxxxx
LOS by Move:	*	*	*	*	*	*	*	*	B	*	*	*
Movement:	LT - LTR - RT			LT - LTR - RT			LT - LTR - RT			LT - LTR - RT		
Shared Cap.:	xxxx	xxxx	xxxxx	xxxx	xxxx	xxxxx	xxxx	xxxx	xxxxx	xxxx	xxxx	xxxxx
SharedQueue:	xxxxx	xxxx	xxxxx	xxxxx	xxxx	xxxxx	xxxxx	xxxx	xxxxx	xxxxx	xxxx	xxxxx
Shrd ConDel:	xxxxx	xxxx	xxxxx	xxxxx	xxxx	xxxxx	xxxxx	xxxx	xxxxx	xxxxx	xxxx	xxxxx
Shared LOS:	*	*	*	*	*	*	*	*	*	*	*	*
ApproachDel:	xxxxxx			xxxxxx			10.5			xxxxxx		
ApproachLOS:	*			*			B			*		

Note: Queue reported is the number of cars per lane.

LLUH Campus Transformation Project
Year 2023 With Project
Evening Peak Hour - With Improvements

Level Of Service Computation Report
2000 HCM Unsignalized Method (Base Volume Alternative)

Intersection #4 Campus Street (NS) at San Juan Street (EW)

Average Delay (sec/veh): 1.1 Worst Case Level Of Service: B[13.7]

Approach:	North Bound			South Bound			East Bound			West Bound		
Movement:	L - T - R			L - T - R			L - T - R			L - T - R		
Control:	Uncontrolled			Uncontrolled			Stop Sign			Stop Sign		
Rights:	Include			Include			Include			Include		
Lanes:	0 0 1 0 0			0 0 1 1 0			0 0 0 0 1			0 0 0 0 0		
Volume Module:												
Base Vol:	0	538	0	0	719	160	0	0	82	0	0	0
Growth Adj:	1.00	1.00	1.00	1.00	1.00	1.00	1.00	1.00	1.00	1.00	1.00	1.00
Initial Bse:	0	538	0	0	719	160	0	0	82	0	0	0
User Adj:	1.00	1.00	1.00	1.00	1.00	1.00	1.00	1.00	1.00	1.00	1.00	1.00
PHF Adj:	0.88	0.88	0.88	0.83	0.83	0.83	0.58	0.58	0.58	1.00	1.00	1.00
PHF Volume:	0	611	0	0	869	193	0	0	141	0	0	0
Reduct Vol:	0	0	0	0	0	0	0	0	0	0	0	0
FinalVolume:	0	611	0	0	869	193	0	0	141	0	0	0
Critical Gap Module:												
Critical Gp:	xxxxx	xxxx	xxxxx	xxxxx	xxxx	xxxxx	xxxxx	xxxx	6.2	xxxxx	xxxx	xxxxx
FollowUpTim:	xxxxx	xxxx	xxxxx	xxxxx	xxxx	xxxxx	xxxxx	xxxx	3.3	xxxxx	xxxx	xxxxx
Capacity Module:												
Cnflict Vol:	xxxx	xxxx	xxxxx	xxxx	xxxx	xxxxx	xxxx	xxxx	531	xxxx	xxxx	xxxxx
Potent Cap.:	xxxx	xxxx	xxxxx	xxxx	xxxx	xxxxx	xxxx	xxxx	552	xxxx	xxxx	xxxxx
Move Cap.:	xxxx	xxxx	xxxxx	xxxx	xxxx	xxxxx	xxxx	xxxx	552	xxxx	xxxx	xxxxx
Volume/Cap:	xxxx	xxxx	xxxx	xxxx	xxxx	xxxx	xxxx	xxxx	0.25	xxxx	xxxx	xxxx
Level Of Service Module:												
2Way95thQ:	xxxx	xxxx	xxxxx	xxxx	xxxx	xxxxx	xxxx	xxxx	1.0	xxxx	xxxx	xxxxx
Control Del:	xxxxx	xxxx	xxxxx	xxxxx	xxxx	xxxxx	xxxxx	xxxx	13.7	xxxxx	xxxx	xxxxx
LOS by Move:	*	*	*	*	*	*	*	*	B	*	*	*
Movement:	LT - LTR - RT			LT - LTR - RT			LT - LTR - RT			LT - LTR - RT		
Shared Cap.:	xxxx	xxxx	xxxxx	xxxx	xxxx	xxxxx	xxxx	xxxx	xxxxx	xxxx	xxxx	xxxxx
SharedQueue:	xxxxx	xxxx	xxxxx	xxxxx	xxxx	xxxxx	xxxxx	xxxx	xxxxx	xxxxx	xxxx	xxxxx
Shrd ConDel:	xxxxx	xxxx	xxxxx	xxxxx	xxxx	xxxxx	xxxxx	xxxx	xxxxx	xxxxx	xxxx	xxxxx
Shared LOS:	*	*	*	*	*	*	*	*	*	*	*	*
ApproachDel:	xxxxxx			xxxxxx			13.7			xxxxxx		
ApproachLOS:	*			*			B			*		

Note: Queue reported is the number of cars per lane.

LLUH Campus Transformation Project
Year 2023 With Project
Morning Peak Hour

Level Of Service Computation Report
2000 HCM Operations Method (Base Volume Alternative)

Intersection #5 Campus Street (NS) at Barton Road (EW)

Cycle (sec): 130 Critical Vol./Cap.(X): 1.001
Loss Time (sec): 8 (Y+R=3.0 sec) Average Delay (sec/veh): 60.8
Optimal Cycle: OPTIMIZED Level Of Service: E

Approach:	North Bound			South Bound			East Bound			West Bound		
Movement:	L -	T -	R	L -	T -	R	L -	T -	R	L -	T -	R
Control:	Prot+Permit			Prot+Permit			Protected			Protected		
Rights:	Include			Include			Include			Include		
Min. Green:	28	28	28	28	28	28	10	18	18	10	21	21
Lanes:	1 0	0 1	0	1 0	1 0	1	1 0	2 0	1	1 0	2 0	1
Volume Module:												
Base Vol:	160	181	17	297	92	79	206	1299	94	44	501	508
Growth Adj:	1.00	1.00	1.00	1.00	1.00	1.00	1.00	1.00	1.00	1.00	1.00	1.00
Initial Bse:	160	181	17	297	92	79	206	1299	94	44	501	508
User Adj:	1.00	1.00	1.00	1.00	1.00	1.00	1.00	1.00	1.00	1.00	1.00	1.00
PHF Adj:	0.76	0.76	0.76	0.79	0.79	0.79	0.87	0.87	0.87	0.78	0.78	0.78
PHF Volume:	211	238	22	378	117	101	238	1502	109	56	642	651
Reduct Vol:	0	0	0	0	0	0	0	0	0	0	0	0
Reduced Vol:	211	238	22	378	117	101	238	1502	109	56	642	651
PCE Adj:	1.00	1.00	1.00	1.00	1.00	1.00	1.00	1.00	1.00	1.00	1.00	1.00
MLF Adj:	1.00	1.00	1.00	1.00	1.00	1.00	1.00	1.00	1.00	1.00	1.00	1.00
FinalVolume:	211	238	22	378	117	101	238	1502	109	56	642	651
Saturation Flow Module:												
Sat/Lane:	1800	1800	1800	1800	1800	1800	1800	1800	1800	1800	1800	1800
Adjustment:	0.94	1.00	1.00	0.94	1.00	1.00	0.94	1.00	1.00	0.94	1.00	1.00
Lanes:	1.00	0.91	0.09	1.00	1.00	1.00	1.00	2.00	1.00	1.00	2.00	1.00
Final Sat.:	1700	1645	155	1700	1800	1800	1700	3600	1800	1700	3600	1800
Capacity Analysis Module:												
Vol/Sat:	0.00	0.14	0.14	0.00	0.07	0.06	0.14	0.42	0.06	0.03	0.18	0.36
Crit Moves:		****		****			****					****
Green/Cycle:	0.22	0.22	0.22	0.22	0.22	0.22	0.14	0.42	0.42	0.08	0.36	0.36
Volume/Cap:	0.57	0.67	0.67	1.00	0.30	0.26	1.00	0.99	0.14	0.43	0.49	1.00
Delay/Veh:	47.3	51.4	51.4	97.4	42.9	42.4	114.8	56.9	23.1	59.3	32.6	77.3
User DelAdj:	1.00	1.00	1.00	1.00	1.00	1.00	1.00	1.00	1.00	1.00	1.00	1.00
AdjDel/Veh:	47.3	51.4	51.4	97.4	42.9	42.4	114.8	56.9	23.1	59.3	32.6	77.3
LOS by Move:	D	D	D	F	D	D	F	E	C	E	C	E
HCM2kAvgQ:	8	10	10	22	4	3	15	36	3	3	10	33

Note: Queue reported is the number of cars per lane.

LLUH Campus Transformation Project
Year 2023 With Project
Evening Peak Hour

Level Of Service Computation Report
2000 HCM Operations Method (Base Volume Alternative)

Intersection #5 Campus Street (NS) at Barton Road (EW)

Cycle (sec): 130 Critical Vol./Cap.(X): 1.037
Loss Time (sec): 8 (Y+R=3.0 sec) Average Delay (sec/veh): 74.0
Optimal Cycle: OPTIMIZED Level Of Service: E

Approach:	North Bound			South Bound			East Bound			West Bound		
Movement:	L - T - R			L - T - R			L - T - R			L - T - R		
Control:	Prot+Permit			Prot+Permit			Protected			Protected		
Rights:	Include			Include			Include			Include		
Min. Green:	28	28	28	28	28	28	10	18	18	10	21	21
Lanes:	1 0	0 1	0	1 0	1 0	1	1 0	2 0	1	1 0	2 0	1
Volume Module:												
Base Vol:	144	80	27	488	139	122	97	603	93	58	1269	296
Growth Adj:	1.00	1.00	1.00	1.00	1.00	1.00	1.00	1.00	1.00	1.00	1.00	1.00
Initial Bse:	144	80	27	488	139	122	97	603	93	58	1269	296
User Adj:	1.00	1.00	1.00	1.00	1.00	1.00	1.00	1.00	1.00	1.00	1.00	1.00
PHF Adj:	0.70	0.70	0.70	0.86	0.86	0.86	0.89	0.89	0.89	0.93	0.93	0.93
PHF Volume:	207	115	39	564	161	141	109	677	104	62	1367	319
Reduct Vol:	0	0	0	0	0	0	0	0	0	0	0	0
Reduced Vol:	207	115	39	564	161	141	109	677	104	62	1367	319
PCE Adj:	1.00	1.00	1.00	1.00	1.00	1.00	1.00	1.00	1.00	1.00	1.00	1.00
MLF Adj:	1.00	1.00	1.00	1.00	1.00	1.00	1.00	1.00	1.00	1.00	1.00	1.00
FinalVolume:	207	115	39	564	161	141	109	677	104	63	1367	319
Saturation Flow Module:												
Sat/Lane:	1800	1800	1800	1800	1800	1800	1800	1800	1800	1800	1800	1800
Adjustment:	0.94	1.00	1.00	0.94	1.00	1.00	0.94	1.00	1.00	0.94	1.00	1.00
Lanes:	1.00	0.75	0.25	1.00	1.00	1.00	1.00	2.00	1.00	1.00	2.00	1.00
Final Sat.:	1700	1346	454	1700	1800	1800	1700	3600	1800	1700	3600	1800
Capacity Analysis Module:												
Vol/Sat:	0.00	0.09	0.09	0.00	0.09	0.08	0.06	0.19	0.06	0.04	0.38	0.18
Crit Moves:		****		****			****				****	
Green/Cycle:	0.26	0.22	0.22	0.30	0.26	0.26	0.08	0.30	0.30	0.12	0.34	0.34
Volume/Cap:	0.47	0.40	0.40	1.10	0.35	0.30	0.83	0.63	0.19	0.30	1.10	0.51
Delay/Veh:	41.5	44.4	44.4	115.9	39.7	39.2	93.5	40.5	34.1	52.8	101	34.7
User DelAdj:	1.00	1.00	1.00	1.00	1.00	1.00	1.00	1.00	1.00	1.00	1.00	1.00
AdjDel/Veh:	41.5	44.4	44.4	115.9	39.7	39.2	93.5	40.5	34.1	52.8	101	34.7
LOS by Move:	D	D	D	F	D	D	F	D	C	D	F	C
HCM2kAvgQ:	8	5	5	34	5	5	7	12	3	3	39	10

Note: Queue reported is the number of cars per lane.

LLUH Campus Transformation Project
Year 2023 With Project
Morning Peak Hour - With Improvements

Level Of Service Computation Report
2000 HCM Operations Method (Base Volume Alternative)

Intersection #5 Campus Street (NS) at Barton Road (EW)

Cycle (sec): 130 Critical Vol./Cap.(X): 0.785
Loss Time (sec): 8 (Y+R=3.0 sec) Average Delay (sec/veh): 44.6
Optimal Cycle: OPTIMIZED Level Of Service: D

Approach:	North Bound			South Bound			East Bound			West Bound		
Movement:	L	T	R	L	T	R	L	T	R	L	T	R
Control:	Split Phase			Split Phase			Protected			Protected		
Rights:	Include			Include			Include			Ovl		
Min. Green:	28	28	28	28	28	28	10	18	18	10	21	21
Lanes:	1 0	0 1	0	1 1	0 0	1	1 0	2 0	1	1 0	2 0	1
Volume Module:												
Base Vol:	160	181	17	297	92	79	206	1299	94	44	501	508
Growth Adj:	1.00	1.00	1.00	1.00	1.00	1.00	1.00	1.00	1.00	1.00	1.00	1.00
Initial Bse:	160	181	17	297	92	79	206	1299	94	44	501	508
User Adj:	1.00	1.00	1.00	1.00	1.00	1.00	1.00	1.00	1.00	1.00	1.00	1.00
PHF Adj:	0.76	0.76	0.76	0.79	0.79	0.79	0.87	0.87	0.87	0.78	0.78	0.78
PHF Volume:	211	238	22	378	117	101	238	1502	109	56	642	651
Reduct Vol:	0	0	0	0	0	0	0	0	0	0	0	0
Reduced Vol:	211	238	22	378	117	101	238	1502	109	56	642	651
PCE Adj:	1.00	1.00	1.00	1.00	1.00	1.00	1.00	1.00	1.00	1.00	1.00	1.00
MLF Adj:	1.00	1.00	1.00	1.00	1.00	1.00	1.00	1.00	1.00	1.00	1.00	1.00
FinalVolume:	211	238	22	378	117	101	238	1502	109	56	642	651
Saturation Flow Module:												
Sat/Lane:	1800	1800	1800	1800	1800	1800	1800	1800	1800	1800	1800	1800
Adjustment:	0.94	1.00	1.00	0.96	1.00	1.00	0.94	1.00	1.00	0.94	1.00	1.00
Lanes:	1.00	0.91	0.09	1.54	0.46	1.00	1.00	2.00	1.00	1.00	2.00	1.00
Final Sat.:	1700	1645	155	2672	828	1800	1700	3600	1800	1700	3600	1800
Capacity Analysis Module:												
Vol/Sat:	0.12	0.14	0.14	0.14	0.14	0.06	0.14	0.42	0.06	0.03	0.18	0.36
Crit Moves:		****			****			****		****		
Green/Cycle:	0.22	0.22	0.22	0.22	0.22	0.22	0.20	0.43	0.43	0.08	0.31	0.53
Volume/Cap:	0.57	0.67	0.67	0.66	0.66	0.26	0.71	0.97	0.14	0.43	0.58	0.69
Delay/Veh:	47.9	51.4	51.4	48.8	48.8	42.7	55.6	52.1	22.5	59.6	38.4	25.1
User DelAdj:	1.00	1.00	1.00	1.00	1.00	1.00	1.00	1.00	1.00	1.00	1.00	1.00
AdjDel/Veh:	47.9	51.4	51.4	48.8	48.8	42.7	55.6	52.1	22.5	59.6	38.4	25.1
LOS by Move:	D	D	D	D	D	D	E	D	C	E	D	C
HCM2kAvgQ:	8	10	10	10	10	3	11	35	3	3	11	20

Note: Queue reported is the number of cars per lane.

LLUH Campus Transformation Project
Year 2023 With Project
Evening Peak Hour - With Improvements

Level Of Service Computation Report
2000 HCM Operations Method (Base Volume Alternative)

Intersection #5 Campus Street (NS) at Barton Road (EW)

Cycle (sec): 130 Critical Vol./Cap.(X): 0.823
Loss Time (sec): 8 (Y+R=3.0 sec) Average Delay (sec/veh): 45.7
Optimal Cycle: OPTIMIZED Level Of Service: D

Approach:	North Bound			South Bound			East Bound			West Bound		
Movement:	L - T - R			L - T - R			L - T - R			L - T - R		
Control:	Split Phase			Split Phase			Protected			Protected		
Rights:	Include			Include			Include			AddLane		
Min. Green:	28	28	28	28	28	28	10	18	18	10	21	21
Lanes:	1 0	0 1	0	1 1	0 0	1	1 0	2 0	1	1 0	2 0	1
Volume Module:												
Base Vol:	144	80	27	488	139	122	97	603	93	58	1269	296
Growth Adj:	1.00	1.00	1.00	1.00	1.00	1.00	1.00	1.00	1.00	1.00	1.00	1.00
Initial Bse:	144	80	27	488	139	122	97	603	93	58	1269	296
User Adj:	1.00	1.00	1.00	1.00	1.00	1.00	1.00	1.00	1.00	1.00	1.00	1.00
PHF Adj:	0.70	0.70	0.70	0.86	0.86	0.86	0.89	0.89	0.89	0.93	0.93	0.93
PHF Volume:	207	115	39	564	161	141	109	677	104	62	1367	319
Reduct Vol:	0	0	0	0	0	0	0	0	0	0	0	0
Reduced Vol:	207	115	39	564	161	141	109	677	104	62	1367	319
PCE Adj:	1.00	1.00	1.00	1.00	1.00	1.00	1.00	1.00	1.00	1.00	1.00	1.00
MLF Adj:	1.00	1.00	1.00	1.00	1.00	1.00	1.00	1.00	1.00	1.00	1.00	1.00
FinalVolume:	207	115	39	564	161	141	109	677	104	63	1367	319
Saturation Flow Module:												
Sat/Lane:	1800	1800	1800	1800	1800	1800	1800	1800	1800	1800	1800	1800
Adjustment:	0.94	1.00	1.00	0.96	1.00	1.00	0.94	1.00	1.00	0.94	1.00	1.00
Lanes:	1.00	0.75	0.25	1.57	0.43	1.00	1.00	2.00	1.00	1.00	2.00	1.00
Final Sat.:	1700	1346	454	2723	776	1800	1700	3600	1800	1700	3600	1800
Capacity Analysis Module:												
Vol/Sat:	0.12	0.09	0.09	0.21	0.21	0.08	0.06	0.19	0.06	0.04	0.38	0.18
Crit Moves:	****			****			****				****	
Green/Cycle:	0.22	0.22	0.22	0.23	0.23	0.23	0.08	0.35	0.35	0.14	0.42	0.42
Volume/Cap:	0.56	0.40	0.40	0.91	0.91	0.34	0.83	0.54	0.17	0.26	0.91	0.42
Delay/Veh:	47.6	44.4	44.4	63.1	63.1	42.5	93.5	34.1	29.2	50.0	43.9	27.1
User DelAdj:	1.00	1.00	1.00	1.00	1.00	1.00	1.00	1.00	1.00	1.00	1.00	1.00
AdjDel/Veh:	47.6	44.4	44.4	63.1	63.1	42.5	93.5	34.1	29.2	50.0	43.9	27.1
LOS by Move:	D	D	D	E	E	D	F	C	C	D	D	C
HCM2kAvgQ:	8	5	5	18	18	5	7	11	3	2	29	9

Note: Queue reported is the number of cars per lane.

LLUH Campus Transformation Project
Year 2023 With Project
Morning Peak Hour

Level Of Service Computation Report
2000 HCM Unsignalized Method (Base Volume Alternative)

Intersection #6 Parkland Street (NS) at Stewart Street (EW)

Average Delay (sec/veh): 0.8 Worst Case Level Of Service: B[11.5]

Approach:	North Bound			South Bound			East Bound			West Bound		
Movement:	L - T - R			L - T - R			L - T - R			L - T - R		
Control:	Stop Sign			Stop Sign			Uncontrolled			Uncontrolled		
Rights:	Include			Include			Include			Include		
Lanes:	0 0 0 0 0			0 0 1! 0 0			0 1 0 0 0			0 0 0 1 0		
Volume Module:												
Base Vol:	0	0	0	6	0	16	33	394	0	0	207	11
Growth Adj:	1.00	1.00	1.00	1.00	1.00	1.00	1.00	1.00	1.00	1.00	1.00	1.00
Initial Bse:	0	0	0	6	0	16	33	394	0	0	207	11
User Adj:	1.00	1.00	1.00	1.00	1.00	1.00	1.00	1.00	1.00	1.00	1.00	1.00
PHF Adj:	1.00	1.00	1.00	0.79	0.79	0.79	0.80	0.80	0.80	0.85	0.85	0.85
PHF Volume:	0	0	0	8	0	20	41	493	0	0	244	13
Reduct Vol:	0	0	0	0	0	0	0	0	0	0	0	0
FinalVolume:	0	0	0	8	0	20	41	493	0	0	244	13
Critical Gap Module:												
Critical Gp:	xxxxx	xxxx	xxxxx	6.4	6.5	6.2	4.1	xxxx	xxxxx	xxxxx	xxxx	xxxxx
FollowUpTim:	xxxxx	xxxx	xxxxx	3.5	4.0	3.3	2.2	xxxx	xxxxx	xxxxx	xxxx	xxxxx
Capacity Module:												
Cnflict Vol:	xxxx	xxxx	xxxxx	827	827	251	257	xxxx	xxxxx	xxxx	xxxx	xxxxx
Potent Cap.:	xxxx	xxxx	xxxxx	344	309	793	1319	xxxx	xxxxx	xxxx	xxxx	xxxxx
Move Cap.:	xxxx	xxxx	xxxxx	336	299	793	1319	xxxx	xxxxx	xxxx	xxxx	xxxxx
Volume/Cap:	xxxx	xxxx	xxxx	0.02	0.00	0.03	0.03	xxxx	xxxx	xxxx	xxxx	xxxx
Level Of Service Module:												
2Way95thQ:	xxxx	xxxx	xxxxx	xxxx	xxxx	xxxxx	0.1	xxxx	xxxxx	xxxx	xxxx	xxxxx
Control Del:	xxxxx	xxxx	xxxxx	xxxxx	xxxx	xxxxx	7.8	xxxx	xxxxx	xxxxx	xxxx	xxxxx
LOS by Move:	*	*	*	*	*	*	A	*	*	*	*	*
Movement:	LT - LTR - RT			LT - LTR - RT			LT - LTR - RT			LT - LTR - RT		
Shared Cap.:	xxxx	xxxx	xxxxx	xxxx	578	xxxxx	xxxx	xxxx	xxxxx	xxxx	xxxx	xxxxx
SharedQueue:	xxxxx	xxxx	xxxxx	xxxxx	0.2	xxxxx	0.1	xxxx	xxxxx	xxxxx	xxxx	xxxxx
Shrd ConDel:	xxxxx	xxxx	xxxxx	xxxxx	11.5	xxxxx	7.8	xxxx	xxxxx	xxxxx	xxxx	xxxxx
Shared LOS:	*	*	*	*	B	*	A	*	*	*	*	*
ApproachDel:	xxxxxx			11.5			xxxxxx			xxxxxx		
ApproachLOS:	*			B			*			*		

Note: Queue reported is the number of cars per lane.

LLUH Campus Transformation Project
Year 2023 With Project
Evening Peak Hour

Level Of Service Computation Report
2000 HCM Unsignalized Method (Base Volume Alternative)

Intersection #6 Parkland Street (NS) at Stewart Street (EW)

Average Delay (sec/veh): 0.7 Worst Case Level Of Service: B[13.9]

Approach:	North Bound			South Bound			East Bound			West Bound		
Movement:	L	T	R	L	T	R	L	T	R	L	T	R
Control:	Stop Sign			Stop Sign			Uncontrolled			Uncontrolled		
Rights:	Include			Include			Include			Include		
Lanes:	0 0 0 0 0			0 0 1! 0 0			0 1 0 0 0			0 0 0 1 0		
Volume Module:												
Base Vol:	0	0	0	12	0	18	13	278	0	0	392	9
Growth Adj:	1.00	1.00	1.00	1.00	1.00	1.00	1.00	1.00	1.00	1.00	1.00	1.00
Initial Bse:	0	0	0	12	0	18	13	278	0	0	392	9
User Adj:	1.00	1.00	1.00	1.00	1.00	1.00	1.00	1.00	1.00	1.00	1.00	1.00
PHF Adj:	1.00	1.00	1.00	0.84	0.84	0.84	0.81	0.81	0.81	0.81	0.81	0.81
PHF Volume:	0	0	0	14	0	21	16	341	0	0	486	11
Reduct Vol:	0	0	0	0	0	0	0	0	0	0	0	0
FinalVolume:	0	0	0	14	0	21	16	341	0	0	486	11
Critical Gap Module:												
Critical Gp:	xxxxx	xxxx	xxxxx	6.4	6.5	6.2	4.1	xxxx	xxxxx	xxxxx	xxxx	xxxxx
FollowUpTim:	xxxxx	xxxx	xxxxx	3.5	4.0	3.3	2.2	xxxx	xxxxx	xxxxx	xxxx	xxxxx
Capacity Module:												
Cnflict Vol:	xxxx	xxxx	xxxxx	865	865	492	498	xxxx	xxxxx	xxxx	xxxx	xxxxx
Potent Cap.:	xxxx	xxxx	xxxxx	327	294	581	1077	xxxx	xxxxx	xxxx	xxxx	xxxxx
Move Cap.:	xxxx	xxxx	xxxxx	323	289	581	1077	xxxx	xxxxx	xxxx	xxxx	xxxxx
Volume/Cap:	xxxx	xxxx	xxxx	0.04	0.00	0.04	0.01	xxxx	xxxx	xxxx	xxxx	xxxx
Level Of Service Module:												
2Way95thQ:	xxxx	xxxx	xxxxx	xxxx	xxxx	xxxxx	0.0	xxxx	xxxxx	xxxx	xxxx	xxxxx
Control Del:	xxxxx	xxxx	xxxxx	xxxxx	xxxx	xxxxx	8.4	xxxx	xxxxx	xxxxx	xxxx	xxxxx
LOS by Move:	*	*	*	*	*	*	A	*	*	*	*	*
Movement:	LT	LTR	RT	LT	LTR	RT	LT	LTR	RT	LT	LTR	RT
Shared Cap.:	xxxx	xxxx	xxxxx	xxxx	440	xxxxx	xxxx	xxxx	xxxxx	xxxx	xxxx	xxxxx
SharedQueue:	xxxxx	xxxx	xxxxx	xxxxx	0.3	xxxxx	0.0	xxxx	xxxxx	xxxxx	xxxx	xxxxx
Shrd ConDel:	xxxxx	xxxx	xxxxx	xxxxx	13.9	xxxxx	8.4	xxxx	xxxxx	xxxxx	xxxx	xxxxx
Shared LOS:	*	*	*	*	B	*	A	*	*	*	*	*
ApproachDel:	xxxxxx			13.9			xxxxxx			xxxxxx		
ApproachLOS:	*			B			*			*		

Note: Queue reported is the number of cars per lane.

LLUH Campus Transformation Project
Year 2023 With Project
Morning Peak Hour

Level Of Service Computation Report
2000 HCM Operations Method (Base Volume Alternative)

Intersection #7 Anderson Street (NS) at Stewart Street (EW)

Cycle (sec): 100 Critical Vol./Cap.(X): 0.764
Loss Time (sec): 6 (Y+R=3.0 sec) Average Delay (sec/veh): 25.3
Optimal Cycle: OPTIMIZED Level Of Service: C

Approach:	North Bound			South Bound			East Bound			West Bound		
Movement:	L - T - R			L - T - R			L - T - R			L - T - R		
Control:	Protected			Protected			Permitted			Permitted		
Rights:	Include			Include			Include			Include		
Min. Green:	10	18	18	10	18	18	28	28	28	28	28	28
Lanes:	1 0 2 0 1			1 0 2 0 1			1 0 0 1 0			1 0 0 1 0		
Volume Module:												
Base Vol:	74	285	76	362	744	739	291	122	70	39	76	151
Growth Adj:	1.00	1.00	1.00	1.00	1.00	1.00	1.00	1.00	1.00	1.00	1.00	1.00
Initial Bse:	74	285	76	362	744	739	291	122	70	39	76	151
User Adj:	1.00	1.00	1.00	1.00	1.00	1.00	1.00	1.00	1.00	1.00	1.00	1.00
PHF Adj:	0.77	0.77	0.77	0.86	0.86	0.86	0.93	0.93	0.93	0.85	0.85	0.85
PHF Volume:	96	371	99	421	865	859	314	131	75	46	89	177
Reduct Vol:	0	0	0	0	0	0	0	0	0	0	0	0
Reduced Vol:	96	371	99	421	865	859	314	131	75	46	89	177
PCE Adj:	1.00	1.00	1.00	1.00	1.00	1.00	1.00	1.00	1.00	1.00	1.00	1.00
MLF Adj:	1.00	1.00	1.00	1.00	1.00	1.00	1.00	1.00	1.00	1.00	1.00	1.00
FinalVolume:	96	371	99	421	865	859	314	131	75	46	89	177
Saturation Flow Module:												
Sat/Lane:	1800	1800	1800	1800	1800	1800	1800	1800	1800	1800	1800	1800
Adjustment:	0.94	1.00	1.00	0.94	1.00	1.00	0.94	1.00	1.00	0.94	1.00	1.00
Lanes:	1.00	2.00	1.00	1.00	2.00	1.00	1.00	0.64	0.36	1.00	0.33	0.67
Final Sat.:	1700	3600	1800	1700	3600	1800	1700	1144	656	1700	603	1197
Capacity Analysis Module:												
Vol/Sat:	0.06	0.10	0.05	0.25	0.24	0.48	0.18	0.11	0.11	0.03	0.15	0.15
Crit Moves:	****					****	****					
Green/Cycle:	0.10	0.28	0.28	0.38	0.56	0.56	0.28	0.28	0.28	0.28	0.28	0.28
Volume/Cap:	0.57	0.37	0.20	0.65	0.43	0.85	0.66	0.41	0.41	0.10	0.53	0.53
Delay/Veh:	47.4	29.3	27.8	27.7	12.9	25.6	35.2	29.8	29.8	26.7	31.5	31.5
User DelAdj:	1.00	1.00	1.00	1.00	1.00	1.00	1.00	1.00	1.00	1.00	1.00	1.00
AdjDel/Veh:	47.4	29.3	27.8	27.7	12.9	25.6	35.2	29.8	29.8	26.7	31.5	31.5
LOS by Move:	D	C	C	C	B	C	D	C	C	C	C	C
HCM2kAvgQ:	4	5	2	12	8	25	10	5	5	1	7	7

Note: Queue reported is the number of cars per lane.

LLUH Campus Transformation Project
Year 2023 With Project
Evening Peak Hour

Level Of Service Computation Report
2000 HCM Operations Method (Base Volume Alternative)

****

Intersection #7 Anderson Street (NS) at Stewart Street (EW)

****

Cycle (sec): 60 Critical Vol./Cap.(X): 0.631
Loss Time (sec): 6 (Y+R=3.0 sec) Average Delay (sec/veh): 17.9
Optimal Cycle: OPTIMIZED Level Of Service: B

****

Approach:	North Bound						South Bound						East Bound						West Bound					
Movement:	L	-	T	-	R		L	-	T	-	R		L	-	T	-	R		L	-	T	-	R	
Control:	Protected						Protected						Permitted						Permitted					
Rights:	Include						Include						Include						Include					
Min. Green:	10		18		18		10		18		18		28		28		28		28		28		28	
Lanes:	1	0	2	0	1		1	0	2	0	1		1	0	0	1	0		1	0	0	1	0	
Volume Module:																								
Base Vol:	53		559		33		153		415		367		402		144		94		55		127		396	
Growth Adj:	1.00		1.00		1.00		1.00		1.00		1.00		1.00		1.00		1.00		1.00		1.00		1.00	
Initial Bse:	53		559		33		153		415		367		402		144		94		55		127		396	
User Adj:	1.00		1.00		1.00		1.00		1.00		1.00		1.00		1.00		1.00		1.00		1.00		1.00	
PHF Adj:	0.96		0.96		0.96		0.97		0.97		0.97		0.90		0.90		0.90		0.92		0.92		0.92	
PHF Volume:	55		584		34		158		429		379		447		160		104		60		138		429	
Reduct Vol:	0		0		0		0		0		0		0		0		0		0		0		0	
Reduced Vol:	55		584		34		158		429		379		447		160		104		60		138		429	
PCE Adj:	1.00		1.00		1.00		1.00		1.00		1.00		1.00		1.00		1.00		1.00		1.00		1.00	
MLF Adj:	1.00		1.00		1.00		1.00		1.00		1.00		1.00		1.00		1.00		1.00		1.00		1.00	
FinalVolume:	55		584		34		158		429		379		447		160		104		60		138		429	
Saturation Flow Module:																								
Sat/Lane:	1800		1800		1800		1800		1800		1800		1800		1800		1800		1800		1800		1800	
Adjustment:	0.94		1.00		1.00		0.94		1.00		1.00		0.94		1.00		1.00		0.94		1.00		1.00	
Lanes:	1.00		2.00		1.00		1.00		2.00		1.00		1.00		0.61		0.39		1.00		0.24		0.76	
Final Sat.:	1700		3600		1800		1700		3600		1800		1700		1089		711		1700		437		1363	
Capacity Analysis Module:																								
Vol/Sat:	0.03		0.16		0.02		0.09		0.12		0.21		0.26		0.15		0.15		0.04		0.32		0.32	
Crit Moves:			****				****														****			
Green/Cycle:	0.16		0.29		0.29		0.16		0.29		0.29		0.45		0.45		0.45		0.45		0.45		0.45	
Volume/Cap:	0.20		0.56		0.07		0.58		0.41		0.73		0.58		0.33		0.33		0.08		0.70		0.70	
Delay/Veh:	22.9		19.3		16.0		27.1		18.0		24.8		13.8		11.2		11.2		9.7		16.3		16.3	
User DelAdj:	1.00		1.00		1.00		1.00		1.00		1.00		1.00		1.00		1.00		1.00		1.00		1.00	
AdjDel/Veh:	22.9		19.3		16.0		27.1		18.0		24.8		13.8		11.2		11.2		9.7		16.3		16.3	
LOS by Move:	C		B		B		C		B		C		B		B		B		A		B		B	
HCM2kAvgQ:	1		5		0		4		4		8		7		3		3		1		10		10	

****

Note: Queue reported is the number of cars per lane.

****

LLUH Campus Transformation Project
Year 2023 With Project
Morning Peak Hour

Level Of Service Computation Report
2000 HCM Operations Method (Base Volume Alternative)

****

Intersection #8 Anderson Street (NS) at University Avenue (EW)

****

Cycle (sec): 130 Critical Vol./Cap.(X): 0.329
Loss Time (sec): 4 (Y+R=3.0 sec) Average Delay (sec/veh): 6.4
Optimal Cycle: OPTIMIZED Level Of Service: A

****

Approach:	North Bound			South Bound			East Bound			West Bound		
Movement:	L -	T -	R	L -	T -	R	L -	T -	R	L -	T -	R
Control:	Permitted			Permitted			Permitted			Permitted		
Rights:	Include			Include			Include			Include		
Min. Green:	18	18	18	18	18	18	28	28	28	0	0	0
Lanes:	1 0	2 0	0	0 0	2 0	1	1 0	0 0	1	0 0	0 0	0
Volume Module:												
Base Vol:	57	390	0	0	752	103	26	0	22	0	0	0
Growth Adj:	1.00	1.00	1.00	1.00	1.00	1.00	1.00	1.00	1.00	1.00	1.00	1.00
Initial Bse:	57	390	0	0	752	103	26	0	22	0	0	0
User Adj:	1.00	1.00	1.00	1.00	1.00	1.00	1.00	1.00	1.00	1.00	1.00	1.00
PHF Adj:	0.81	0.81	0.81	0.70	0.70	0.70	0.79	0.79	0.79	1.00	1.00	1.00
PHF Volume:	71	484	0	0	1077	148	33	0	28	0	0	0
Reduct Vol:	0	0	0	0	0	0	0	0	0	0	0	0
Reduced Vol:	71	484	0	0	1077	148	33	0	28	0	0	0
PCE Adj:	1.00	1.00	1.00	1.00	1.00	1.00	1.00	1.00	1.00	1.00	1.00	1.00
MLF Adj:	1.00	1.00	1.00	1.00	1.00	1.00	1.00	1.00	1.00	1.00	1.00	1.00
FinalVolume:	71	484	0	0	1077	148	33	0	28	0	0	0
Saturation Flow Module:												
Sat/Lane:	1800	1800	1800	1800	1800	1800	1800	1800	1800	1800	1800	1800
Adjustment:	0.94	1.00	1.00	0.94	1.00	1.00	0.94	1.00	1.00	0.94	1.00	1.00
Lanes:	1.00	2.00	0.00	0.00	2.00	1.00	1.00	0.00	1.00	0.00	0.00	0.00
Final Sat.:	1700	3600	0	0	3600	1800	1700	0	1800	0	0	0
Capacity Analysis Module:												
Vol/Sat:	0.04	0.13	0.00	0.00	0.30	0.08	0.02	0.00	0.02	0.00	0.00	0.00
Crit Moves:					****		****					
Green/Cycle:	0.75	0.75	0.00	0.00	0.75	0.75	0.22	0.00	0.22	0.00	0.00	0.00
Volume/Cap:	0.06	0.18	0.00	0.00	0.40	0.11	0.09	0.00	0.07	0.00	0.00	0.00
Delay/Veh:	4.1	4.6	0.0	0.0	5.7	4.3	40.9	0.0	40.7	0.0	0.0	0.0
User DelAdj:	1.00	1.00	1.00	1.00	1.00	1.00	1.00	1.00	1.00	1.00	1.00	1.00
AdjDel/Veh:	4.1	4.6	0.0	0.0	5.7	4.3	40.9	0.0	40.7	0.0	0.0	0.0
LOS by Move:	A	A	A	A	A	A	D	A	D	A	A	A
HCM2kAvgQ:	1	3	0	0	7	2	1	0	1	0	0	0

****

Note: Queue reported is the number of cars per lane.

****

LLUH Campus Transformation Project
Year 2023 With Project
Evening Peak Hour

Level Of Service Computation Report
2000 HCM Operations Method (Base Volume Alternative)

Intersection #8 Anderson Street (NS) at University Avenue (EW)

Cycle (sec): 130 Critical Vol./Cap.(X): 0.250
Loss Time (sec): 4 (Y+R=3.0 sec) Average Delay (sec/veh): 7.1
Optimal Cycle: OPTIMIZED Level Of Service: A

Approach:	North Bound			South Bound			East Bound			West Bound		
Movement:	L - T - R			L - T - R			L - T - R			L - T - R		
Control:	Permitted			Permitted			Permitted			Permitted		
Rights:	Include			Include			Include			Include		
Min. Green:	18	18	18	18	18	18	28	28	28	0	0	0
Lanes:	1 0 2 0 0			0 0 2 0 1			1 0 0 0 1			0 0 0 0 0		
Volume Module:												
Base Vol:	48	652	0	0	522	44	46	0	26	0	0	0
Growth Adj:	1.00	1.00	1.00	1.00	1.00	1.00	1.00	1.00	1.00	1.00	1.00	1.00
Initial Bse:	48	652	0	0	522	44	46	0	26	0	0	0
User Adj:	1.00	1.00	1.00	1.00	1.00	1.00	1.00	1.00	1.00	1.00	1.00	1.00
PHF Adj:	0.88	0.88	0.88	0.84	0.84	0.84	0.74	0.74	0.74	1.00	1.00	1.00
PHF Volume:	55	740	0	0	620	52	62	0	35	0	0	0
Reduct Vol:	0	0	0	0	0	0	0	0	0	0	0	0
Reduced Vol:	55	740	0	0	620	52	62	0	35	0	0	0
PCE Adj:	1.00	1.00	1.00	1.00	1.00	1.00	1.00	1.00	1.00	1.00	1.00	1.00
MLF Adj:	1.00	1.00	1.00	1.00	1.00	1.00	1.00	1.00	1.00	1.00	1.00	1.00
FinalVolume:	55	740	0	0	620	52	62	0	35	0	0	0
Saturation Flow Module:												
Sat/Lane:	1800	1800	1800	1800	1800	1800	1800	1800	1800	1800	1800	1800
Adjustment:	0.94	1.00	1.00	0.94	1.00	1.00	0.94	1.00	1.00	0.94	1.00	1.00
Lanes:	1.00	2.00	0.00	0.00	2.00	1.00	1.00	0.00	1.00	0.00	0.00	0.00
Final Sat.:	1700	3600	0	0	3600	1800	1700	0	1800	0	0	0
Capacity Analysis Module:												
Vol/Sat:	0.03	0.21	0.00	0.00	0.17	0.03	0.04	0.00	0.02	0.00	0.00	0.00
Crit Moves:		****					****					
Green/Cycle:	0.75	0.75	0.00	0.00	0.75	0.75	0.22	0.00	0.22	0.00	0.00	0.00
Volume/Cap:	0.04	0.27	0.00	0.00	0.23	0.04	0.17	0.00	0.09	0.00	0.00	0.00
Delay/Veh:	4.1	5.0	0.0	0.0	4.8	4.1	41.8	0.0	40.9	0.0	0.0	0.0
User DelAdj:	1.00	1.00	1.00	1.00	1.00	1.00	1.00	1.00	1.00	1.00	1.00	1.00
AdjDel/Veh:	4.1	5.0	0.0	0.0	4.8	4.1	41.8	0.0	40.9	0.0	0.0	0.0
LOS by Move:	A	A	A	A	A	A	D	A	D	A	A	A
HCM2kAvgQ:	1	5	0	0	4	1	2	0	1	0	0	0

Note: Queue reported is the number of cars per lane.

LLUH Campus Transformation Project
Year 2023 With Project
Morning Peak Hour

Level Of Service Computation Report
2000 HCM 4-Way Stop Method (Base Volume Alternative)

****

Intersection #9 Anderson Street (NS) at Mound Street (EW)

****

Cycle (sec): 0 Critical Vol./Cap.(X): 0.913
Loss Time (sec): 0 (Y+R=4.0 sec) Average Delay (sec/veh): 31.3
Optimal Cycle: 0 Level Of Service: D

****

Approach:	North Bound			South Bound			East Bound			West Bound		
Movement:	L -	T -	R	L -	T -	R	L -	T -	R	L -	T -	R
Control:	Stop Sign			Stop Sign			Stop Sign			Stop Sign		
Rights:	Include			Include			Include			Include		
Min. Green:	0	0	0	0	0	0	0	0	0	0	0	0
Lanes:	1 1	0 0	1	0 0	1! 0	0	1 0	0 1	1	0 0	1! 0	0
Volume Module:												
Base Vol:	411	72	70	22	30	17	31	118	592	32	21	10
Growth Adj:	1.00	1.00	1.00	1.00	1.00	1.00	1.00	1.00	1.00	1.00	1.00	1.00
Initial Bse:	411	72	70	22	30	17	31	118	592	32	21	10
User Adj:	1.00	1.00	1.00	1.00	1.00	1.00	1.00	1.00	1.00	1.00	1.00	1.00
PHF Adj:	0.77	0.77	0.77	0.75	0.75	0.75	0.71	0.71	0.71	0.56	0.56	0.56
PHF Volume:	534	94	91	29	40	23	44	166	835	57	37	18
Reduct Vol:	0	0	0	0	0	0	0	0	0	0	0	0
Reduced Vol:	534	94	91	29	40	23	44	166	835	57	37	18
PCE Adj:	1.00	1.00	1.00	1.00	1.00	1.00	1.00	1.00	1.00	1.00	1.00	1.00
MLF Adj:	1.00	1.00	1.00	1.00	1.00	1.00	1.00	1.00	1.00	1.00	1.00	1.00
FinalVolume:	534	94	91	29	40	23	44	166	835	57	37	18
Saturation Flow Module:												
Adjustment:	1.00	1.00	1.00	1.00	1.00	1.00	1.00	1.00	1.00	1.00	1.00	1.00
Lanes:	1.70	0.30	1.00	0.32	0.43	0.25	1.00	0.33	1.67	0.51	0.33	0.16
Final Sat.:	784	139	535	144	197	111	474	182	935	232	152	72
Capacity Analysis Module:												
Vol/Sat:	0.68	0.67	0.17	0.20	0.20	0.20	0.09	0.91	0.89	0.24	0.24	0.24
Crit Moves:	****			****				****			****	
Delay/Veh:	25.2	24.5	10.6	12.7	12.7	12.7	11.0	44.7	41.1	13.1	13.1	13.1
Delay Adj:	1.00	1.00	1.00	1.00	1.00	1.00	1.00	1.00	1.00	1.00	1.00	1.00
AdjDel/Veh:	25.2	24.5	10.6	12.7	12.7	12.7	11.0	44.7	41.1	13.1	13.1	13.1
LOS by Move:	D	C	B	B	B	B	B	E	E	B	B	B
ApproachDel:		23.3			12.7			40.4			13.1	
Delay Adj:		1.00			1.00			1.00			1.00	
ApprAdjDel:		23.3			12.7			40.4			13.1	
LOS by Appr:		C			B			E			B	
AllWayAvgQ:	1.8	1.8	0.2	0.2	0.2	0.2	0.1	5.4	5.4	0.3	0.3	0.3

****

Note: Queue reported is the number of cars per lane.

****

LLUH Campus Transformation Project
Year 2023 With Project
Evening Peak Hour

Level Of Service Computation Report
2000 HCM 4-Way Stop Method (Base Volume Alternative)

Intersection #9 Anderson Street (NS) at Mound Street (EW)

Cycle (sec):	0	Critical Vol./Cap.(X):	0.786
Loss Time (sec):	0 (Y+R=4.0 sec)	Average Delay (sec/veh):	23.9
Optimal Cycle:	0	Level Of Service:	C

Approach:	North Bound			South Bound			East Bound			West Bound		
Movement:	L -	T -	R	L -	T -	R	L -	T -	R	L -	T -	R
Control:	Stop Sign			Stop Sign			Stop Sign			Stop Sign		
Rights:	Include			Include			Include			Include		
Min. Green:	0	0	0	0	0	0	0	0	0	0	0	0
Lanes:	1 1	0 0	1	0 0	1! 0	0	1 0	0 1	1	0 0	1! 0	0
Volume Module:												
Base Vol:	574	76	47	9	65	9	26	59	475	68	115	8
Growth Adj:	1.00	1.00	1.00	1.00	1.00	1.00	1.00	1.00	1.00	1.00	1.00	1.00
Initial Bse:	574	76	47	9	65	9	26	59	475	68	115	8
User Adj:	1.00	1.00	1.00	1.00	1.00	1.00	1.00	1.00	1.00	1.00	1.00	1.00
PHF Adj:	0.88	0.88	0.88	0.76	0.76	0.76	0.83	0.83	0.83	0.83	0.83	0.83
PHF Volume:	652	86	53	12	85	12	31	71	569	82	138	10
Reduct Vol:	0	0	0	0	0	0	0	0	0	0	0	0
Reduced Vol:	652	86	53	12	85	12	31	71	569	82	138	10
PCE Adj:	1.00	1.00	1.00	1.00	1.00	1.00	1.00	1.00	1.00	1.00	1.00	1.00
MLF Adj:	1.00	1.00	1.00	1.00	1.00	1.00	1.00	1.00	1.00	1.00	1.00	1.00
FinalVolume:	652	86	53	12	85	12	31	71	569	82	138	10
Saturation Flow Module:												
Adjustment:	1.00	1.00	1.00	1.00	1.00	1.00	1.00	1.00	1.00	1.00	1.00	1.00
Lanes:	1.77	0.23	1.00	0.11	0.78	0.11	1.00	0.22	1.78	0.36	0.60	0.04
Final Sat.:	829	111	547	45	327	45	446	114	928	161	273	19
Capacity Analysis Module:												
Vol/Sat:	0.79	0.78	0.10	0.26	0.26	0.26	0.07	0.62	0.61	0.51	0.51	0.51
Crit Moves:	****				****			****		****		
Delay/Veh:	32.6	31.8	9.9	13.8	13.8	13.8	11.2	19.9	19.4	18.1	18.1	18.1
Delay Adj:	1.00	1.00	1.00	1.00	1.00	1.00	1.00	1.00	1.00	1.00	1.00	1.00
AdjDel/Veh:	32.6	31.8	9.9	13.8	13.8	13.8	11.2	19.9	19.4	18.1	18.1	18.1
LOS by Move:	D	D	A	B	B	B	B	C	C	C	C	C
ApproachDel:		31.0			13.8			19.1			18.1	
Delay Adj:		1.00			1.00			1.00			1.00	
ApprAdjDel:		31.0			13.8			19.1			18.1	
LOS by Appr:		D			B			C			C	
AllWayAvgQ:	2.8	2.8	0.1	0.3	0.3	0.3	0.1	1.5	1.5	0.9	0.9	0.9

Note: Queue reported is the number of cars per lane.

LLUH Campus Transformation Project
Year 2023 With Project
Morning Peak Hour - With Improvements

Level Of Service Computation Report
2000 HCM Operations Method (Base Volume Alternative)

Intersection #9 Anderson Street (NS) at Mound Street (EW)

Cycle (sec): 95 Critical Vol./Cap.(X): 0.556
Loss Time (sec): 8 (Y+R=6.0 sec) Average Delay (sec/veh): 20.8
Optimal Cycle: OPTIMIZED Level Of Service: C

Approach:	North Bound			South Bound			East Bound			West Bound		
Movement:	L -	T -	R	L -	T -	R	L -	T -	R	L -	T -	R
Control:	Split Phase			Split Phase			Permitted			Permitted		
Rights:	Include			Include			Ovl			Include		
Min. Green:	28	28	28	28	28	28	28	28	28	28	28	28
Lanes:	1 1	0 0	1	0 0	1! 0	0	1 0	0 1	1	0 0	1! 0	0
Volume Module:												
Base Vol:	411	72	70	22	30	17	31	118	592	32	21	10
Growth Adj:	1.00	1.00	1.00	1.00	1.00	1.00	1.00	1.00	1.00	1.00	1.00	1.00
Initial Bse:	411	72	70	22	30	17	31	118	592	32	21	10
User Adj:	1.00	1.00	1.00	1.00	1.00	1.00	1.00	1.00	1.00	1.00	1.00	1.00
PHF Adj:	0.77	0.77	0.77	0.75	0.75	0.75	0.71	0.71	0.71	0.56	0.56	0.56
PHF Volume:	534	94	91	29	40	23	44	166	835	57	37	18
Reduct Vol:	0	0	0	0	0	0	0	0	0	0	0	0
Reduced Vol:	534	94	91	29	40	23	44	166	835	57	37	18
PCE Adj:	1.00	1.00	1.00	1.00	1.00	1.00	1.00	1.00	1.00	1.00	1.00	1.00
MLF Adj:	1.00	1.00	1.00	1.00	1.00	1.00	1.00	1.00	1.00	1.00	1.00	1.00
FinalVolume:	534	94	91	29	40	23	44	166	835	57	37	18
Saturation Flow Module:												
Sat/Lane:	1800	1800	1800	1800	1800	1800	1800	1800	1800	1800	1800	1800
Adjustment:	0.97	1.00	1.00	1.00	1.00	1.00	0.94	1.00	1.00	1.00	1.00	1.00
Lanes:	1.71	0.29	1.00	0.32	0.43	0.25	1.00	0.33	1.67	0.51	0.33	0.16
Final Sat.:	2978	522	1800	574	783	443	1700	598	3002	914	600	286
Capacity Analysis Module:												
Vol/Sat:	0.18	0.18	0.05	0.05	0.05	0.05	0.03	0.28	0.28	0.06	0.06	0.06
Crit Moves:		****		****				****				
Green/Cycle:	0.29	0.29	0.29	0.29	0.29	0.29	0.33	0.33	0.62	0.33	0.33	0.33
Volume/Cap:	0.61	0.61	0.17	0.17	0.17	0.17	0.08	0.85	0.45	0.19	0.19	0.19
Delay/Veh:	29.9	29.9	25.0	25.1	25.1	25.1	22.2	36.1	9.6	23.1	23.1	23.1
User DelAdj:	1.00	1.00	1.00	1.00	1.00	1.00	1.00	1.00	1.00	1.00	1.00	1.00
AdjDel/Veh:	29.9	29.9	25.0	25.1	25.1	25.1	22.2	36.1	9.6	23.1	23.1	23.1
LOS by Move:	C	C	C	C	C	C	C	D	A	C	C	C
HCM2kAvgQ:	9	9	2	2	2	2	1	17	8	2	2	2

Note: Queue reported is the number of cars per lane.

LLUH Campus Transformation Project
Year 2023 With Project
Evening Peak Hour - With Improvements

Level Of Service Computation Report
2000 HCM Operations Method (Base Volume Alternative)

Intersection #9 Anderson Street (NS) at Mound Street (EW)

Cycle (sec): 95 Critical Vol./Cap.(X): 0.480
Loss Time (sec): 6 (Y+R=3.0 sec) Average Delay (sec/veh): 20.5
Optimal Cycle: OPTIMIZED Level Of Service: C

Approach:	North Bound				South Bound				East Bound				West Bound			
Movement:	L	- T	- R		L	- T	- R		L	- T	- R		L	- T	- R	
Control:	Split Phase				Split Phase				Permitted				Permitted			
Rights:	Include				Include				Ovl				Include			
Min. Green:	28	28	28		28	28	28		28	28	28		28	28	28	
Lanes:	1 1	0 0	1		0 0	1! 0	0		1 0	0 1	1		0 0	1! 0	0	
Volume Module:																
Base Vol:	574	76	47		9	65	9		26	59	475		68	115	8	
Growth Adj:	1.00	1.00	1.00		1.00	1.00	1.00		1.00	1.00	1.00		1.00	1.00	1.00	
Initial Bse:	574	76	47		9	65	9		26	59	475		68	115	8	
User Adj:	1.00	1.00	1.00		1.00	1.00	1.00		1.00	1.00	1.00		1.00	1.00	1.00	
PHF Adj:	0.88	0.88	0.88		0.76	0.76	0.76		0.83	0.83	0.83		0.83	0.83	0.83	
PHF Volume:	652	86	53		12	85	12		31	71	569		82	138	10	
Reduct Vol:	0	0	0		0	0	0		0	0	0		0	0	0	
Reduced Vol:	652	86	53		12	85	12		31	71	569		82	138	10	
PCE Adj:	1.00	1.00	1.00		1.00	1.00	1.00		1.00	1.00	1.00		1.00	1.00	1.00	
MLF Adj:	1.00	1.00	1.00		1.00	1.00	1.00		1.00	1.00	1.00		1.00	1.00	1.00	
FinalVolume:	652	86	53		12	85	12		31	71	569		82	138	10	
Saturation Flow Module:																
Sat/Lane:	1800	1800	1800		1800	1800	1800		1800	1800	1800		1800	1800	1800	
Adjustment:	0.97	1.00	1.00		1.00	1.00	1.00		0.94	1.00	1.00		1.00	1.00	1.00	
Lanes:	1.77	0.23	1.00		0.11	0.78	0.11		1.00	0.22	1.78		0.36	0.60	0.04	
Final Sat.:	3090	409	1800		195	1410	195		1700	398	3202		641	1084	75	
Capacity Analysis Module:																
Vol/Sat:	0.21	0.21	0.03		0.06	0.06	0.06		0.02	0.18	0.18		0.13	0.13	0.13	
Crit Moves:		****				****				****						
Green/Cycle:	0.35	0.35	0.35		0.29	0.29	0.29		0.29	0.29	0.64		0.29	0.29	0.29	
Volume/Cap:	0.61	0.61	0.09		0.21	0.21	0.21		0.06	0.60	0.28		0.43	0.43	0.43	
Delay/Veh:	26.5	26.5	20.9		25.3	25.3	25.3		24.1	29.7	7.5		27.6	27.6	27.6	
User DelAdj:	1.00	1.00	1.00		1.00	1.00	1.00		1.00	1.00	1.00		1.00	1.00	1.00	
AdjDel/Veh:	26.5	26.5	20.9		25.3	25.3	25.3		24.1	29.7	7.5		27.6	27.6	27.6	
LOS by Move:	C	C	C		C	C	C		C	C	A		C	C	C	
HCM2kAvgQ:	10	10	1		2	2	2		1	9	4		6	6	6	

Note: Queue reported is the number of cars per lane.

LLUH Campus Transformation Project
Year 2023 With Project
Morning Peak Hour

Level Of Service Computation Report
2000 HCM Unsignalized Method (Base Volume Alternative)

Intersection #10 Anderson Street (NS) at Taylor Street (EW)

Average Delay (sec/veh): 0.6 Worst Case Level Of Service: A[9.8]

Approach:	North Bound				South Bound				East Bound				West Bound			
Movement:	L	T	R		L	T	R		L	T	R		L	T	R	
Control:	Uncontrolled				Uncontrolled				Stop Sign				Stop Sign			
Rights:	Include				Include				Include				Include			
Lanes:	1 0	2 0	0		0 0	1 1	0		0 0	0 0	0		0 0	0 0	0	
Volume Module:																
Base Vol:	75	539	0		0	643	36		0	0	0		0	0	0	
Growth Adj:	1.00	1.00	1.00		1.00	1.00	1.00		1.00	1.00	1.00		1.00	1.00	1.00	
Initial Bse:	75	539	0		0	643	36		0	0	0		0	0	0	
User Adj:	1.00	1.00	1.00		1.00	1.00	1.00		1.00	1.00	1.00		1.00	1.00	1.00	
PHF Adj:	0.77	0.77	0.77		0.87	0.87	0.87		1.00	1.00	1.00		1.00	1.00	1.00	
PHF Volume:	98	702	0		0	740	41		0	0	0		0	0	0	
Reduct Vol:	0	0	0		0	0	0		0	0	0		0	0	0	
FinalVolume:	98	702	0		0	740	41		0	0	0		0	0	0	
Critical Gap Module:																
Critical Gp:	4.1	xxxx	xxxxx	xxxxx	xxxx	xxxxx	xxxxx	xxxx	xxxxx	xxxxx	xxxx	xxxxx				
FollowUpTim:	2.2	xxxx	xxxxx	xxxxx	xxxx	xxxxx	xxxxx	xxxx	xxxxx	xxxxx	xxxx	xxxxx				
Capacity Module:																
Cnflict Vol:	781	xxxx	xxxxx	xxxx	xxxx	xxxxx	xxxx	xxxx	xxxxx	xxxx	xxxx	xxxxx				
Potent Cap.:	845	xxxx	xxxxx	xxxx	xxxx	xxxxx	xxxx	xxxx	xxxxx	xxxx	xxxx	xxxxx				
Move Cap.:	845	xxxx	xxxxx	xxxx	xxxx	xxxxx	xxxx	xxxx	xxxxx	xxxx	xxxx	xxxxx				
Volume/Cap:	0.12	xxxx	xxxx	xxxx	xxxx	xxxx	xxxx	xxxx	xxxx	xxxx	xxxx	xxxx				
Level Of Service Module:																
2Way95thQ:	0.4	xxxx	xxxxx	xxxx	xxxx	xxxxx	xxxx	xxxx	xxxxx	xxxx	xxxx	xxxxx				
Control Del:	9.8	xxxx	xxxxx	xxxxx	xxxx	xxxxx	xxxxx	xxxx	xxxxx	xxxxx	xxxx	xxxxx				
LOS by Move:	A	*	*	*	*	*	*	*	*	*	*	*				
Movement:	LT	LTR	RT	LT	LTR	RT	LT	LTR	RT	LT	LTR	RT				
Shared Cap.:	xxxx	xxxx	xxxxx	xxxx	xxxx	xxxxx	xxxx	xxxx	xxxxx	xxxx	xxxx	xxxxx				
SharedQueue:	xxxxx	xxxx	xxxxx	xxxxx	xxxx	xxxxx	xxxxx	xxxx	xxxxx	xxxxx	xxxx	xxxxx				
Shrd ConDel:	xxxxx	xxxx	xxxxx	xxxxx	xxxx	xxxxx	xxxxx	xxxx	xxxxx	xxxxx	xxxx	xxxxx				
Shared LOS:	*	*	*	*	*	*	*	*	*	*	*	*				
ApproachDel:	xxxxxx			xxxxxx			xxxxxx			xxxxxx						
ApproachLOS:	*			*			*			*						

Note: Queue reported is the number of cars per lane.

LLUH Campus Transformation Project
Year 2023 With Project
Evening Peak Hour

Level Of Service Computation Report
2000 HCM Unsignalized Method (Base Volume Alternative)

Intersection #10 Anderson Street (NS) at Taylor Street (EW)

Average Delay (sec/veh): 0.1 Worst Case Level Of Service: A[8.9]

Approach:	North Bound			South Bound			East Bound			West Bound		
Movement:	L	T	R	L	T	R	L	T	R	L	T	R
Control:	Uncontrolled			Uncontrolled			Stop Sign			Stop Sign		
Rights:	Include			Include			Include			Include		
Lanes:	1 0 2 0 0			0 0 1 1 0			0 0 0 0 0			0 0 0 0 0		
Volume Module:												
Base Vol:	13	668	0	0	599	5	0	0	0	0	0	0
Growth Adj:	1.00	1.00	1.00	1.00	1.00	1.00	1.00	1.00	1.00	1.00	1.00	1.00
Initial Bse:	13	668	0	0	599	5	0	0	0	0	0	0
User Adj:	1.00	1.00	1.00	1.00	1.00	1.00	1.00	1.00	1.00	1.00	1.00	1.00
PHF Adj:	0.91	0.91	0.91	0.91	0.91	0.91	1.00	1.00	1.00	1.00	1.00	1.00
PHF Volume:	14	734	0	0	659	5	0	0	0	0	0	0
Reduct Vol:	0	0	0	0	0	0	0	0	0	0	0	0
FinalVolume:	14	734	0	0	659	5	0	0	0	0	0	0
Critical Gap Module:												
Critical Gp:	4.1	xxxx	xxxxx	xxxxx	xxxx	xxxxx	xxxxx	xxxx	xxxxx	xxxxx	xxxx	xxxxx
FollowUpTim:	2.2	xxxx	xxxxx	xxxxx	xxxx	xxxxx	xxxxx	xxxx	xxxxx	xxxxx	xxxx	xxxxx
Capacity Module:												
Cnflict Vol:	664	xxxx	xxxxx	xxxx	xxxx	xxxxx	xxxx	xxxx	xxxxx	xxxx	xxxx	xxxxx
Potent Cap.:	935	xxxx	xxxxx	xxxx	xxxx	xxxxx	xxxx	xxxx	xxxxx	xxxx	xxxx	xxxxx
Move Cap.:	935	xxxx	xxxxx	xxxx	xxxx	xxxxx	xxxx	xxxx	xxxxx	xxxx	xxxx	xxxxx
Volume/Cap:	0.02	xxxx	xxxx	xxxx	xxxx	xxxx	xxxx	xxxx	xxxx	xxxx	xxxx	xxxx
Level Of Service Module:												
2Way95thQ:	0.0	xxxx	xxxxx	xxxx	xxxx	xxxxx	xxxx	xxxx	xxxxx	xxxx	xxxx	xxxxx
Control Del:	8.9	xxxx	xxxxx	xxxxx	xxxx	xxxxx	xxxxx	xxxx	xxxxx	xxxxx	xxxx	xxxxx
LOS by Move:	A	*	*	*	*	*	*	*	*	*	*	*
Movement:	LT	LTR	RT	LT	LTR	RT	LT	LTR	RT	LT	LTR	RT
Shared Cap.:	xxxx	xxxx	xxxxx	xxxx	xxxx	xxxxx	xxxx	xxxx	xxxxx	xxxx	xxxx	xxxxx
SharedQueue:	xxxxx	xxxx	xxxxx	xxxxx	xxxx	xxxxx	xxxxx	xxxx	xxxxx	xxxxx	xxxx	xxxxx
Shrd ConDel:	xxxxx	xxxx	xxxxx	xxxxx	xxxx	xxxxx	xxxxx	xxxx	xxxxx	xxxxx	xxxx	xxxxx
Shared LOS:	*	*	*	*	*	*	*	*	*	*	*	*
ApproachDel:	xxxxxx			xxxxxx			xxxxxx			xxxxxx		
ApproachLOS:	*			*			*			*		

Note: Queue reported is the number of cars per lane.

LLUH Campus Transformation Project
Year 2023 With Project
Morning Peak Hour

Level Of Service Computation Report
2000 HCM 4-Way Stop Method (Base Volume Alternative)

Intersection #11 Anderson Street (NS) at Prospect Avenue (EW)

Cycle (sec):	0	Critical Vol./Cap.(X):	0.746
Loss Time (sec):	0 (Y+R=4.0 sec)	Average Delay (sec/veh):	24.5
Optimal Cycle:	0	Level Of Service:	C

Approach:	North Bound			South Bound			East Bound			West Bound		
Movement:	L - T - R			L - T - R			L - T - R			L - T - R		
Control:	Stop Sign			Stop Sign			Stop Sign			Stop Sign		
Rights:	Include			Include			Include			Include		
Min. Green:	0	0	0	0	0	0	0	0	0	0	0	0
Lanes:	0 0	1 1	0	1 0	2 0	0	0 0	1! 0	0	0 0	1! 0	0
Volume Module:												
Base Vol:	0	377	141	282	347	0	46	37	46	78	0	227
Growth Adj:	1.00	1.00	1.00	1.00	1.00	1.00	1.00	1.00	1.00	1.00	1.00	1.00
Initial Bse:	0	377	141	282	347	0	46	37	46	78	0	227
User Adj:	1.00	1.00	1.00	1.00	1.00	1.00	1.00	1.00	1.00	1.00	1.00	1.00
PHF Adj:	0.74	0.74	0.74	0.88	0.88	0.88	0.71	0.71	0.71	0.84	0.84	0.84
PHF Volume:	0	512	191	321	395	0	65	52	65	93	0	269
Reduct Vol:	0	0	0	0	0	0	0	0	0	0	0	0
Reduced Vol:	0	512	191	321	395	0	65	52	65	93	0	269
PCE Adj:	1.00	1.00	1.00	1.00	1.00	1.00	1.00	1.00	1.00	1.00	1.00	1.00
MLF Adj:	1.00	1.00	1.00	1.00	1.00	1.00	1.00	1.00	1.00	1.00	1.00	1.00
FinalVolume:	0	512	191	321	395	0	65	52	65	93	0	269
Saturation Flow Module:												
Adjustment:	1.00	1.00	1.00	1.00	1.00	1.00	1.00	1.00	1.00	1.00	1.00	1.00
Lanes:	0.00	1.46	0.54	1.00	2.00	0.00	0.35	0.29	0.36	0.26	0.00	0.74
Final Sat.:	0	685	265	437	929	0	150	121	150	126	0	367
Capacity Analysis Module:												
Vol/Sat:	xxxx	0.75	0.72	0.73	0.42	xxxx	0.43	0.43	0.43	0.73	xxxx	0.73
Crit Moves:		****		****				****		****		
Delay/Veh:	0.0	29.1	26.3	29.6	15.8	0.0	16.4	16.4	16.4	26.0	0.0	26.0
Delay Adj:	1.00	1.00	1.00	1.00	1.00	1.00	1.00	1.00	1.00	1.00	1.00	1.00
AdjDel/Veh:	0.0	29.1	26.3	29.6	15.8	0.0	16.4	16.4	16.4	26.0	0.0	26.0
LOS by Move:	*	D	D	D	C	*	C	C	C	D	*	D
ApproachDel:		28.3			21.9			16.4			26.0	
Delay Adj:		1.00			1.00			1.00			1.00	
ApprAdjDel:		28.3			21.9			16.4			26.0	
LOS by Appr:		D			C			C			D	
AllWayAvgQ:	0.0	2.6	2.2	2.3	0.7	0.0	0.6	0.6	0.6	2.2	2.2	2.2

Note: Queue reported is the number of cars per lane.

LLUH Campus Transformation Project
Year 2023 With Project
Evening Peak Hour

Level Of Service Computation Report
2000 HCM 4-Way Stop Method (Base Volume Alternative)

Intersection #11 Anderson Street (NS) at Prospect Avenue (EW)

Cycle (sec):	0	Critical Vol./Cap.(X):	1.321
Loss Time (sec):	0 (Y+R=4.0 sec)	Average Delay (sec/veh):	70.0
Optimal Cycle:	0	Level Of Service:	F

Approach:	North Bound			South Bound			East Bound			West Bound		
Movement:	L - T - R			L - T - R			L - T - R			L - T - R		
Control:	Stop Sign			Stop Sign			Stop Sign			Stop Sign		
Rights:	Include			Include			Include			Include		
Min. Green:	0	0	0	0	0	0	0	0	0	0	0	0
Lanes:	0 0 1	1 0		1 0 2	0 0		0 0 1!	0 0		0 0 1!	0 0	
Volume Module:												
Base Vol:	0	374	211	161	458	0	78	79	110	236	0	274
Growth Adj:	1.00	1.00	1.00	1.00	1.00	1.00	1.00	1.00	1.00	1.00	1.00	1.00
Initial Bse:	0	374	211	161	458	0	78	79	110	236	0	274
User Adj:	1.00	1.00	1.00	1.00	1.00	1.00	1.00	1.00	1.00	1.00	1.00	1.00
PHF Adj:	0.97	0.97	0.97	0.86	0.86	0.86	0.80	0.80	0.80	0.88	0.88	0.88
PHF Volume:	0	385	217	187	533	0	98	99	138	270	0	313
Reduct Vol:	0	0	0	0	0	0	0	0	0	0	0	0
Reduced Vol:	0	385	217	187	533	0	98	99	138	270	0	313
PCE Adj:	1.00	1.00	1.00	1.00	1.00	1.00	1.00	1.00	1.00	1.00	1.00	1.00
MLF Adj:	1.00	1.00	1.00	1.00	1.00	1.00	1.00	1.00	1.00	1.00	1.00	1.00
FinalVolume:	0	385	217	187	533	0	98	99	138	270	0	313
Saturation Flow Module:												
Adjustment:	1.00	1.00	1.00	1.00	1.00	1.00	1.00	1.00	1.00	1.00	1.00	1.00
Lanes:	0.00	1.28	0.72	1.00	2.00	0.00	0.29	0.30	0.41	0.46	0.01	0.53
Final Sat.:	0	520	307	385	814	0	121	123	171	204	0	237
Capacity Analysis Module:												
Vol/Sat:	xxxx	0.74	0.71	0.49	0.65	xxxx	0.81	0.81	0.81	1.32	0.00	1.32
Crit Moves:		****			****			****		****		
Delay/Veh:	0.0	32.7	28.9	20.4	26.6	0.0	38.4	38.4	38.4	183.8	184	183.8
Delay Adj:	1.00	1.00	1.00	1.00	1.00	1.00	1.00	1.00	1.00	1.00	1.00	1.00
AdjDel/Veh:	0.0	32.7	28.9	20.4	26.6	0.0	38.4	38.4	38.4	183.8	184	183.8
LOS by Move:	*	D	D	C	D	*	E	E	E	F	F	F
ApproachDel:		31.3			25.0			38.4			183.8	
Delay Adj:		1.00			1.00			1.00			1.00	
ApprAdjDel:		31.3			25.0			38.4			183.8	
LOS by Appr:		D			C			E			F	
AllWayAvgQ:	0.0	2.5	2.1	0.9	1.7	0.0	3.1	3.1	3.1	21.2	21.2	21.2

Note: Queue reported is the number of cars per lane.

LLUH Campus Transformation Project
Year 2023 With Project
Morning Peak Hour - With Improvements

Level Of Service Computation Report
2000 HCM Operations Method (Base Volume Alternative)

Intersection #11 Anderson Street (NS) at Prospect Avenue (EW)

Cycle (sec): 70 Critical Vol./Cap.(X): 0.640
Loss Time (sec): 6 (Y+R=3.0 sec) Average Delay (sec/veh): 21.0
Optimal Cycle: OPTIMIZED Level Of Service: C

Approach:	North Bound			South Bound			East Bound			West Bound		
Movement:	L -	T -	R	L -	T -	R	L -	T -	R	L -	T -	R
Control:	Protected			Protected			Permitted			Permitted		
Rights:	Include			Include			Include			Include		
Min. Green:	10	18	18	10	18	18	28	28	28	28	28	28
Lanes:	1 0	1 1	0	1 0	2 0	0	0 0	1! 0	0	0 0	1! 0	0
Volume Module:												
Base Vol:	0	377	141	282	347	0	46	37	46	78	0	227
Growth Adj:	1.00	1.00	1.00	1.00	1.00	1.00	1.00	1.00	1.00	1.00	1.00	1.00
Initial Bse:	0	377	141	282	347	0	46	37	46	78	0	227
User Adj:	1.00	1.00	1.00	1.00	1.00	1.00	1.00	1.00	1.00	1.00	1.00	1.00
PHF Adj:	0.74	0.74	0.74	0.88	0.88	0.88	0.71	0.71	0.71	0.84	0.84	0.84
PHF Volume:	0	512	191	321	395	0	65	52	65	93	0	269
Reduct Vol:	0	0	0	0	0	0	0	0	0	0	0	0
Reduced Vol:	0	512	191	321	395	0	65	52	65	93	0	269
PCE Adj:	1.00	1.00	1.00	1.00	1.00	1.00	1.00	1.00	1.00	1.00	1.00	1.00
MLF Adj:	1.00	1.00	1.00	1.00	1.00	1.00	1.00	1.00	1.00	1.00	1.00	1.00
FinalVolume:	0	512	191	321	395	0	65	52	65	93	0	269
Saturation Flow Module:												
Sat/Lane:	1800	1800	1800	1800	1800	1800	1800	1800	1800	1800	1800	1800
Adjustment:	0.94	1.00	1.00	0.94	1.00	1.00	1.00	1.00	1.00	1.00	1.00	1.00
Lanes:	1.00	1.46	0.54	1.00	2.00	0.00	0.36	0.29	0.35	0.26	0.00	0.74
Final Sat.:	1700	2620	980	1700	3600	0	642	516	642	460	0	1340
Capacity Analysis Module:												
Vol/Sat:	0.00	0.20	0.20	0.19	0.11	0.00	0.10	0.10	0.10	0.20	0.00	0.20
Crit Moves:		****		****						****		
Green/Cycle:	0.00	0.26	0.26	0.25	0.51	0.00	0.40	0.40	0.40	0.40	0.00	0.40
Volume/Cap:	0.00	0.75	0.75	0.75	0.21	0.00	0.25	0.25	0.25	0.50	0.00	0.50
Delay/Veh:	0.0	27.0	27.0	31.1	9.3	0.0	14.2	14.2	14.2	16.3	0.0	16.3
User DelAdj:	1.00	1.00	1.00	1.00	1.00	1.00	1.00	1.00	1.00	1.00	1.00	1.00
AdjDel/Veh:	0.0	27.0	27.0	31.1	9.3	0.0	14.2	14.2	14.2	16.3	0.0	16.3
LOS by Move:	A	C	C	C	A	A	B	B	B	B	A	B
HCM2kAvgQ:	0	9	9	9	2	0	3	3	3	6	0	6

Note: Queue reported is the number of cars per lane.

LLUH Campus Transformation Project
Year 2023 With Project
Evening Peak Hour - With Improvements

Level Of Service Computation Report
2000 HCM Operations Method (Base Volume Alternative)

Intersection #11 Anderson Street (NS) at Prospect Avenue (EW)

Cycle (sec): 60 Critical Vol./Cap.(X): 0.666
Loss Time (sec): 6 (Y+R=3.0 sec) Average Delay (sec/veh): 16.7
Optimal Cycle: OPTIMIZED Level Of Service: B

Approach:	North Bound			South Bound			East Bound			West Bound		
Movement:	L -	T -	R	L -	T -	R	L -	T -	R	L -	T -	R
Control:	Protected			Protected			Permitted			Permitted		
Rights:	Include			Include			Include			Include		
Min. Green:	10	18	18	10	18	18	28	28	28	28	28	28
Lanes:	1 0	1 1	0	1 0	2 0	0	0 0	1! 0	0	0 0	1! 0	0
Volume Module:												
Base Vol:	0	374	211	161	458	0	78	79	110	236	0	274
Growth Adj:	1.00	1.00	1.00	1.00	1.00	1.00	1.00	1.00	1.00	1.00	1.00	1.00
Initial Bse:	0	374	211	161	458	0	78	79	110	236	0	274
User Adj:	1.00	1.00	1.00	1.00	1.00	1.00	1.00	1.00	1.00	1.00	1.00	1.00
PHF Adj:	0.97	0.97	0.97	0.86	0.86	0.86	0.80	0.80	0.80	0.88	0.88	0.88
PHF Volume:	0	385	217	187	533	0	98	99	138	270	0	313
Reduct Vol:	0	0	0	0	0	0	0	0	0	0	0	0
Reduced Vol:	0	385	217	187	533	0	98	99	138	270	0	313
PCE Adj:	1.00	1.00	1.00	1.00	1.00	1.00	1.00	1.00	1.00	1.00	1.00	1.00
MLF Adj:	1.00	1.00	1.00	1.00	1.00	1.00	1.00	1.00	1.00	1.00	1.00	1.00
FinalVolume:	0	385	217	187	533	0	98	99	138	270	0	313
Saturation Flow Module:												
Sat/Lane:	1800	1800	1800	1800	1800	1800	1800	1800	1800	1800	1800	1800
Adjustment:	0.94	1.00	1.00	0.94	1.00	1.00	1.00	1.00	1.00	1.00	1.00	1.00
Lanes:	1.00	1.28	0.72	1.00	2.00	0.00	0.29	0.30	0.41	0.46	0.00	0.54
Final Sat.:	1700	2302	1298	1700	3600	0	526	533	742	833	0	967
Capacity Analysis Module:												
Vol/Sat:	0.00	0.17	0.17	0.11	0.15	0.00	0.19	0.19	0.19	0.32	0.00	0.32
Crit Moves:		****		****						****		
Green/Cycle:	0.00	0.29	0.29	0.16	0.45	0.00	0.45	0.45	0.45	0.45	0.00	0.45
Volume/Cap:	0.00	0.58	0.58	0.68	0.33	0.00	0.41	0.41	0.41	0.72	0.00	0.72
Delay/Veh:	0.0	19.5	19.5	31.4	11.1	0.0	11.8	11.8	11.8	16.9	0.0	16.9
User DelAdj:	1.00	1.00	1.00	1.00	1.00	1.00	1.00	1.00	1.00	1.00	1.00	1.00
AdjDel/Veh:	0.0	19.5	19.5	31.4	11.1	0.0	11.8	11.8	11.8	16.9	0.0	16.9
LOS by Move:	A	B	B	C	B	A	B	B	B	B	A	B
HCM2kAvgQ:	0	6	6	5	3	0	5	5	5	10	0	10

Note: Queue reported is the number of cars per lane.

LLUH Campus Transformation Project
Year 2023 With Project
Morning Peak Hour - With Improvements

Level Of Service Computation Report
2000 HCM Unsignalized Method (Base Volume Alternative)

Intersection #13 Anderson Street (NS) at Starr Street (EW)

Average Delay (sec/veh): 1.4 Worst Case Level Of Service: B[14.2]

Approach:	North Bound			South Bound			East Bound			West Bound		
Movement:	L -	T -	R	L -	T -	R	L -	T -	R	L -	T -	R
Control:	Uncontrolled			Uncontrolled			Stop Sign			Stop Sign		
Rights:	Include			Include			Include			Include		
Lanes:	1 0	1 1	0	1 0	1 1	0	0 0	1! 0	0	0 0	1! 0	0
Volume Module:												
Base Vol:	33	422	14	6	438	69	32	0	27	3	0	17
Growth Adj:	1.00	1.00	1.00	1.00	1.00	1.00	1.00	1.00	1.00	1.00	1.00	1.00
Initial Bse:	33	422	14	6	438	69	32	0	27	3	0	17
User Adj:	1.00	1.00	1.00	1.00	1.00	1.00	1.00	1.00	1.00	1.00	1.00	1.00
PHF Adj:	0.77	0.77	0.77	0.91	0.91	0.91	0.95	0.95	0.95	0.54	0.54	0.54
PHF Volume:	43	551	18	7	481	76	34	0	28	6	0	32
Reduct Vol:	0	0	0	0	0	0	0	0	0	0	0	0
FinalVolume:	43	551	18	7	481	76	34	0	28	6	0	32
Critical Gap Module:												
Critical Gp:	4.1	xxxx	xxxxx	4.1	xxxx	xxxxx	7.5	6.5	6.9	7.5	6.5	6.9
FollowUpTim:	2.2	xxxx	xxxxx	2.2	xxxx	xxxxx	3.5	4.0	3.3	3.5	4.0	3.3
Capacity Module:												
Cnflict Vol:	557	xxxx	xxxxx	569	xxxx	xxxxx	894	1188	279	900	1217	285
Potent Cap.:	1024	xxxx	xxxxx	1013	xxxx	xxxxx	239	190	725	237	182	718
Move Cap.:	1024	xxxx	xxxxx	1013	xxxx	xxxxx	220	181	725	219	174	718
Total Cap:	xxxx	xxxx	xxxxx	xxxx	xxxx	xxxxx	344	300	xxxxx	323	287	xxxxx
Volume/Cap:	0.04	xxxx	xxxx	0.01	xxxx	xxxx	0.10	0.00	0.04	0.02	0.00	0.04
Level Of Service Module:												
2Way95thQ:	0.1	xxxx	xxxxx	0.0	xxxx	xxxxx	xxxx	xxxx	xxxxx	xxxx	xxxx	xxxxx
Control Del:	8.7	xxxx	xxxxx	8.6	xxxx	xxxxx	xxxxx	xxxx	xxxxx	xxxxx	xxxx	xxxxx
LOS by Move:	A	*	*	A	*	*	*	*	*	*	*	*
Movement:	LT -	LTR -	RT	LT -	LTR -	RT	LT -	LTR -	RT	LT -	LTR -	RT
Shared Cap.:	xxxx	xxxx	xxxxx	xxxx	xxxx	xxxxx	xxxx	453	xxxxx	xxxx	607	xxxxx
SharedQueue:	xxxxx	xxxx	xxxxx	xxxxx	xxxx	xxxxx	xxxxx	0.5	xxxxx	xxxxx	0.2	xxxxx
Shrd ConDel:	xxxxx	xxxx	xxxxx	xxxxx	xxxx	xxxxx	xxxxx	14.2	xxxxx	xxxxx	11.3	xxxxx
Shared LOS:	*	*	*	*	*	*	*	B	*	*	B	*
ApproachDel:	xxxxxx			xxxxxx			14.2			11.3		
ApproachLOS:	*			*			B			B		

Note: Queue reported is the number of cars per lane.

LLUH Campus Transformation Project
Year 2023 With Project
Evening Peak Hour - With Improvements

Level Of Service Computation Report
2000 HCM Unsignalized Method (Base Volume Alternative)

Intersection #13 Anderson Street (NS) at Starr Street (EW)

Average Delay (sec/veh): 2.3 Worst Case Level Of Service: C[17.5]

Approach:	North Bound			South Bound			East Bound			West Bound		
Movement:	L - T - R			L - T - R			L - T - R			L - T - R		
Control:	Uncontrolled			Uncontrolled			Stop Sign			Stop Sign		
Rights:	Include			Include			Include			Include		
Lanes:	1 0 1 1 0			1 0 1 1 0			0 0 1! 0 0			0 0 1! 0 0		
Volume Module:												
Base Vol:	25	380	9	16	533	49	68	0	28	14	0	27
Growth Adj:	1.00	1.00	1.00	1.00	1.00	1.00	1.00	1.00	1.00	1.00	1.00	1.00
Initial Bse:	25	380	9	16	533	49	68	0	28	14	0	27
User Adj:	1.00	1.00	1.00	1.00	1.00	1.00	1.00	1.00	1.00	1.00	1.00	1.00
PHF Adj:	0.91	0.91	0.91	0.92	0.92	0.92	0.95	0.95	0.95	0.67	0.67	0.67
PHF Volume:	27	417	10	17	576	53	72	0	29	21	0	40
Reduct Vol:	0	0	0	0	0	0	0	0	0	0	0	0
FinalVolume:	27	417	10	17	576	53	72	0	29	21	0	40
Critical Gap Module:												
Critical Gp:	4.1	xxxx	xxxxx	4.1	xxxx	xxxxx	7.5	6.5	6.9	7.5	6.5	6.9
FollowUpTim:	2.2	xxxx	xxxxx	2.2	xxxx	xxxxx	3.5	4.0	3.3	3.5	4.0	3.3
Capacity Module:												
Cnflict Vol:	629	xxxx	xxxxx	427	xxxx	xxxxx	901	1119	315	800	1141	213
Potent Cap.:	963	xxxx	xxxxx	1143	xxxx	xxxxx	236	208	687	280	202	798
Move Cap.:	963	xxxx	xxxxx	1143	xxxx	xxxxx	217	199	687	259	194	798
Total Cap:	xxxx	xxxx	xxxxx	xxxx	xxxx	xxxxx	328	316	xxxxx	374	305	xxxxx
Volume/Cap:	0.03	xxxx	xxxx	0.02	xxxx	xxxx	0.22	0.00	0.04	0.06	0.00	0.05
Level Of Service Module:												
2Way95thQ:	0.1	xxxx	xxxxx	0.0	xxxx	xxxxx	xxxx	xxxx	xxxxx	xxxx	xxxx	xxxxx
Control Del:	8.8	xxxx	xxxxx	8.2	xxxx	xxxxx	xxxxx	xxxx	xxxxx	xxxxx	xxxx	xxxxx
LOS by Move:	A	*	*	A	*	*	*	*	*	*	*	*
Movement:	LT - LTR - RT			LT - LTR - RT			LT - LTR - RT			LT - LTR - RT		
Shared Cap.:	xxxx	xxxx	xxxxx	xxxx	xxxx	xxxxx	xxxx	387	xxxxx	xxxx	575	xxxxx
SharedQueue:	xxxxx	xxxx	xxxxx	xxxxx	xxxx	xxxxx	xxxxx	1.0	xxxxx	xxxxx	0.4	xxxxx
Shrd ConDel:	xxxxx	xxxx	xxxxx	xxxxx	xxxx	xxxxx	xxxxx	17.5	xxxxx	xxxxx	12.0	xxxxx
Shared LOS:	*	*	*	*	*	*	*	C	*	*	B	*
ApproachDel:	xxxxxx			xxxxxx			17.5			12.0		
ApproachLOS:	*			*			C			B		

Note: Queue reported is the number of cars per lane.

LLUH Campus Transformation Project
Year 2023 With Project
Morning Peak Hour

Level Of Service Computation Report
2000 HCM Operations Method (Base Volume Alternative)

Intersection #14 Anderson Street (NS) at Barton Road (EW)

Cycle (sec): 130 Critical Vol./Cap.(X): 0.968
Loss Time (sec): 8 (Y+R=3.0 sec) Average Delay (sec/veh): 48.6
Optimal Cycle: OPTIMIZED Level Of Service: D

Approach:	North Bound			South Bound			East Bound			West Bound		
Movement:	L - T - R			L - T - R			L - T - R			L - T - R		
Control:	Prot+Permit			Prot+Permit			Protected			Protected		
Rights:	Include			Include			Include			Include		
Min. Green:	28	28	28	28	28	28	10	21	21	10	28	28
Lanes:	1 0	0 1	0	1 0	1 0	1	2 0	2 0	1	1 0	2 0	1
Volume Module:												
Base Vol:	85	147	40	113	207	128	240	1087	116	147	862	40
Growth Adj:	1.00	1.00	1.00	1.00	1.00	1.00	1.00	1.00	1.00	1.00	1.00	1.00
Initial Bse:	85	147	40	113	207	128	240	1087	116	147	862	40
User Adj:	1.00	1.00	1.00	1.00	1.00	1.00	1.00	1.00	1.00	1.00	1.00	1.00
PHF Adj:	0.74	0.74	0.74	0.91	0.91	0.91	0.82	0.82	0.82	0.80	0.80	0.80
PHF Volume:	116	200	54	124	227	140	293	1329	142	185	1083	50
Reduct Vol:	0	0	0	0	0	0	0	0	0	0	0	0
Reduced Vol:	116	200	54	124	227	140	293	1329	142	185	1083	50
PCE Adj:	1.00	1.00	1.00	1.00	1.00	1.00	1.00	1.00	1.00	1.00	1.00	1.00
MLF Adj:	1.00	1.00	1.00	1.00	1.00	1.00	1.00	1.00	1.00	1.00	1.00	1.00
FinalVolume:	116	200	54	124	227	140	293	1329	142	185	1083	50
Saturation Flow Module:												
Sat/Lane:	1800	1800	1800	1800	1800	1800	1800	1800	1800	1800	1800	1800
Adjustment:	0.94	1.00	1.00	0.94	1.00	1.00	0.89	1.00	1.00	0.94	1.00	1.00
Lanes:	1.00	0.79	0.21	1.00	1.00	1.00	2.00	2.00	1.00	1.00	2.00	1.00
Final Sat.:	1700	1415	385	1700	1800	1800	3200	3600	1800	1700	3600	1800
Capacity Analysis Module:												
Vol/Sat:	0.00	0.14	0.14	0.00	0.13	0.08	0.09	0.37	0.08	0.11	0.30	0.03
Crit Moves:		****		****				****		****		
Green/Cycle:	0.22	0.22	0.22	0.22	0.22	0.22	0.12	0.39	0.39	0.12	0.39	0.39
Volume/Cap:	0.32	0.66	0.66	0.34	0.58	0.36	0.77	0.94	0.20	0.94	0.77	0.07
Delay/Veh:	43.4	50.7	50.7	43.7	48.1	44.0	65.1	50.6	26.2	104.6	37.4	25.0
User DelAdj:	1.00	1.00	1.00	1.00	1.00	1.00	1.00	1.00	1.00	1.00	1.00	1.00
AdjDel/Veh:	43.4	50.7	50.7	43.7	48.1	44.0	65.1	50.6	26.2	104.6	37.4	25.0
LOS by Move:	D	D	D	D	D	D	E	D	C	F	D	C
HCM2kAvgQ:	4	10	10	5	9	5	8	30	4	11	20	1

Note: Queue reported is the number of cars per lane.

LLUH Campus Transformation Project
Year 2023 With Project
Evening Peak Hour

Level Of Service Computation Report
2000 HCM Operations Method (Base Volume Alternative)

Intersection #14 Anderson Street (NS) at Barton Road (EW)

Cycle (sec): 120 Critical Vol./Cap.(X): 0.926
Loss Time (sec): 8 (Y+R=3.0 sec) Average Delay (sec/veh): 42.0
Optimal Cycle: OPTIMIZED Level Of Service: D

Approach:	North Bound			South Bound			East Bound			West Bound		
Movement:	L	T	R	L	T	R	L	T	R	L	T	R
Control:	Prot+Permit			Prot+Permit			Protected			Protected		
Rights:	Include			Include			Include			Include		
Min. Green:	28	28	28	28	28	28	10	21	21	10	28	28
Lanes:	1 0	0 1	0	1 0	1 0	1	2 0	2 0	1	1 0	2 0	1
Volume Module:												
Base Vol:	197	144	82	155	122	306	166	988	55	57	1086	114
Growth Adj:	1.00	1.00	1.00	1.00	1.00	1.00	1.00	1.00	1.00	1.00	1.00	1.00
Initial Bse:	197	144	82	155	122	306	166	988	55	57	1086	114
User Adj:	1.00	1.00	1.00	1.00	1.00	1.00	1.00	1.00	1.00	1.00	1.00	1.00
PHF Adj:	0.73	0.73	0.73	0.90	0.90	0.90	0.90	0.90	0.90	0.96	0.96	0.96
PHF Volume:	271	198	113	171	135	338	185	1102	61	59	1130	119
Reduct Vol:	0	0	0	0	0	0	0	0	0	0	0	0
Reduced Vol:	271	198	113	171	135	338	185	1102	61	59	1130	119
PCE Adj:	1.00	1.00	1.00	1.00	1.00	1.00	1.00	1.00	1.00	1.00	1.00	1.00
MLF Adj:	1.00	1.00	1.00	1.00	1.00	1.00	1.00	1.00	1.00	1.00	1.00	1.00
FinalVolume:	271	198	113	171	135	338	185	1102	61	59	1130	119
Saturation Flow Module:												
Sat/Lane:	1800	1800	1800	1800	1800	1800	1800	1800	1800	1800	1800	1800
Adjustment:	0.94	1.00	1.00	0.94	1.00	1.00	0.89	1.00	1.00	0.94	1.00	1.00
Lanes:	1.00	0.64	0.36	1.00	1.00	1.00	2.00	2.00	1.00	1.00	2.00	1.00
Final Sat.:	1700	1147	653	1700	1800	1800	3200	3600	1800	1700	3600	1800
Capacity Analysis Module:												
Vol/Sat:	0.00	0.17	0.17	0.00	0.07	0.19	0.06	0.31	0.03	0.03	0.31	0.07
Crit Moves:	****					****	****				****	
Green/Cycle:	0.23	0.23	0.23	0.23	0.23	0.23	0.08	0.37	0.37	0.10	0.38	0.38
Volume/Cap:	0.68	0.74	0.74	0.43	0.32	0.81	0.69	0.83	0.09	0.35	0.82	0.17
Delay/Veh:	46.9	49.6	49.6	40.0	38.6	54.3	61.2	39.4	25.0	51.6	37.2	24.5
User DelAdj:	1.00	1.00	1.00	1.00	1.00	1.00	1.00	1.00	1.00	1.00	1.00	1.00
AdjDel/Veh:	46.9	49.6	49.6	40.0	38.6	54.3	61.2	39.4	25.0	51.6	37.2	24.5
LOS by Move:	D	D	D	D	D	D	E	D	C	D	D	C
HCM2kAvgQ:	11	12	12	6	4	14	5	21	1	2	21	3

Note: Queue reported is the number of cars per lane.

LLUH Campus Transformation Project
Year 2023 With Project
Morning Peak Hour - With Improvements

Level Of Service Computation Report
2000 HCM Unsignalized Method (Base Volume Alternative)

Intersection #15 Project Access (NS) at Barton Road (EW)

Average Delay (sec/veh): 0.1 Worst Case Level Of Service: B[13.2]

Approach:	North Bound					South Bound					East Bound					West Bound				
Movement:	L	-	T	-	R	L	-	T	-	R	L	-	T	-	R	L	-	T	-	R
Control:	Stop Sign					Stop Sign					Uncontrolled					Uncontrolled				
Rights:	Include					Include					Include					Include				
Lanes:	0	0	0	0	0	0	0	0	0	1	0	0	2	0	0	0	0	1	1	0
Volume Module:																				
Base Vol:	0	0	0	0	0	0	0	0	13		0	1613		0		0	1040		85	
Growth Adj:	1.00	1.00	1.00	1.00	1.00	1.00	1.00	1.00	1.00		1.00	1.00		1.00		1.00	1.00		1.00	
Initial Bse:	0	0	0	0	0	0	0	0	13		0	1613		0		0	1040		85	
User Adj:	1.00	1.00	1.00	1.00	1.00	1.00	1.00	1.00	1.00		1.00	1.00		1.00		1.00	1.00		1.00	
PHF Adj:	0.95	0.95	0.95	0.95	0.95	0.95	0.95	0.95	0.95		0.95	0.95		0.95		0.95	0.95		0.95	
PHF Volume:	0	0	0	0	0	0	0	0	14		0	1698		0		0	1095		89	
Reduct Vol:	0	0	0	0	0	0	0	0	0		0	0		0		0	0		0	
FinalVolume:	0	0	0	0	0	0	0	0	14		0	1698		0		0	1095		89	
Critical Gap Module:																				
Critical Gp:	xxxxx	xxxx	xxxxx	xxxxx	xxxx				6.9		xxxxx	xxxx	xxxxx	xxxxx	xxxx	xxxxx				
FollowUpTim:	xxxxx	xxxx	xxxxx	xxxxx	xxxx				3.3		xxxxx	xxxx	xxxxx	xxxxx	xxxx	xxxxx				
Capacity Module:																				
Cnflict Vol:	xxxx	xxxx	xxxxx	xxxx	xxxx				592		xxxx	xxxx	xxxxx	xxxx	xxxx	xxxxx				
Potent Cap.:	xxxx	xxxx	xxxxx	xxxx	xxxx				454		xxxx	xxxx	xxxxx	xxxx	xxxx	xxxxx				
Move Cap.:	xxxx	xxxx	xxxxx	xxxx	xxxx				454		xxxx	xxxx	xxxxx	xxxx	xxxx	xxxxx				
Volume/Cap:	xxxx	xxxx	xxxx	xxxx	xxxx				0.03		xxxx	xxxx	xxxx	xxxx	xxxx	xxxx				
Level Of Service Module:																				
2Way95thQ:	xxxx	xxxx	xxxxx	xxxx	xxxx				0.1		xxxx	xxxx	xxxxx	xxxx	xxxx	xxxxx				
Control Del:	xxxxx	xxxx	xxxxx	xxxxx	xxxx				13.2		xxxxx	xxxx	xxxxx	xxxxx	xxxx	xxxxx				
LOS by Move:	*	*	*	*	*				B		*	*	*	*	*	*				
Movement:	LT	-	LTR	-	RT	LT	-	LTR	-	RT	LT	-	LTR	-	RT	LT	-	LTR	-	RT
Shared Cap.:	xxxx	xxxx	xxxxx	xxxx	xxxx	xxxxx	xxxx	xxxx	xxxxx	xxxx	xxxx	xxxxx	xxxx	xxxx	xxxxx					
SharedQueue:	xxxxx	xxxx	xxxxx	xxxxx	xxxx	xxxxx	xxxxx	xxxx	xxxxx	xxxxx	xxxx	xxxxx								
Shrd ConDel:	xxxxx	xxxx	xxxxx	xxxxx	xxxx	xxxxx	xxxxx	xxxx	xxxxx	xxxxx	xxxx	xxxxx								
Shared LOS:	*	*	*	*	*	*	*	*	*	*	*	*								
ApproachDel:	xxxxxx					13.2					xxxxxx					xxxxxx				
ApproachLOS:	*					B					*					*				

Note: Queue reported is the number of cars per lane.

LLUH Campus Transformation Project
Year 2023 With Project
Evening Peak Hour - With Improvements

Level Of Service Computation Report
2000 HCM Unsignalized Method (Base Volume Alternative)

Intersection #15 Project Access (NS) at Barton Road (EW)

Average Delay (sec/veh): 0.1 Worst Case Level Of Service: C[17.9]

Approach:	North Bound					South Bound					East Bound					West Bound				
Movement:	L	-	T	-	R	L	-	T	-	R	L	-	T	-	R	L	-	T	-	R
Control:	Stop Sign					Stop Sign					Uncontrolled					Uncontrolled				
Rights:	Include					Include					Include					Include				
Lanes:	0	0	0	0	0	0	0	0	0	1	0	0	2	0	0	0	0	1	1	0
Volume Module:																				
Base Vol:	0	0	0	0	0	0	0	0	0	14	0	1209		0		0	1609		63	
Growth Adj:	1.00	1.00	1.00	1.00	1.00	1.00	1.00	1.00	1.00	1.00	1.00	1.00	1.00	1.00	1.00	1.00	1.00	1.00	1.00	1.00
Initial Bse:	0	0	0	0	0	0	0	0	0	14	0	1209		0		0	1609		63	
User Adj:	1.00	1.00	1.00	1.00	1.00	1.00	1.00	1.00	1.00	1.00	1.00	1.00	1.00	1.00	1.00	1.00	1.00	1.00	1.00	1.00
PHF Adj:	0.95	0.95	0.95	0.95	0.95	0.95	0.95	0.95	0.95	0.95	0.95	0.95	0.95	0.95	0.95	0.95	0.95	0.95	0.95	0.95
PHF Volume:	0	0	0	0	0	0	0	0	0	15	0	1273		0		0	1694		66	
Reduct Vol:	0	0	0	0	0	0	0	0	0	0	0	0		0		0	0		0	
FinalVolume:	0	0	0	0	0	0	0	0	0	15	0	1273		0		0	1694		66	
Critical Gap Module:																				
Critical Gp:	xxxxx	xxxx	xxxxx	xxxxx	xxxx					6.9	xxxxx	xxxx	xxxxx	xxxxx	xxxx	xxxxx				
FollowUpTim:	xxxxx	xxxx	xxxxx	xxxxx	xxxx					3.3	xxxxx	xxxx	xxxxx	xxxxx	xxxx	xxxxx				
Capacity Module:																				
Cnflict Vol:	xxxx	xxxx	xxxxx	xxxx	xxxx					880	xxxx	xxxx	xxxxx	xxxx	xxxx	xxxxx				
Potent Cap.:	xxxx	xxxx	xxxxx	xxxx	xxxx					294	xxxx	xxxx	xxxxx	xxxx	xxxx	xxxxx				
Move Cap.:	xxxx	xxxx	xxxxx	xxxx	xxxx					294	xxxx	xxxx	xxxxx	xxxx	xxxx	xxxxx				
Volume/Cap:	xxxx	xxxx	xxxx	xxxx	xxxx					0.05	xxxx	xxxx	xxxx	xxxx	xxxx	xxxx				
Level Of Service Module:																				
2Way95thQ:	xxxx	xxxx	xxxxx	xxxx	xxxx					0.2	xxxx	xxxx	xxxxx	xxxx	xxxx	xxxxx				
Control Del:	xxxxx	xxxx	xxxxx	xxxxx	xxxx					17.9	xxxxx	xxxx	xxxxx	xxxxx	xxxx	xxxxx				
LOS by Move:	*	*	*	*	*					C	*	*	*	*	*	*				
Movement:	LT	-	LTR	-	RT	LT	-	LTR	-	RT	LT	-	LTR	-	RT	LT	-	LTR	-	RT
Shared Cap.:	xxxx	xxxx	xxxxx	xxxx	xxxx	xxxxx					xxxx	xxxx	xxxxx	xxxx	xxxx	xxxxx				
SharedQueue:	xxxxx	xxxx	xxxxx	xxxxx	xxxx	xxxxx					xxxxx	xxxx	xxxxx	xxxxx	xxxx	xxxxx				
Shrd ConDel:	xxxxx	xxxx	xxxxx	xxxxx	xxxx	xxxxx					xxxxx	xxxx	xxxxx	xxxxx	xxxx	xxxxx				
Shared LOS:	*	*	*	*	*	*					*	*	*	*	*	*				
ApproachDel:	xxxxxx					17.9					xxxxxx					xxxxxx				
ApproachLOS:	*					C					*					*				

Note: Queue reported is the number of cars per lane.

APPENDIX E

Traffic Signal Warrant Worksheets

WARRANT 3, PEAK HOUR
(Urban Areas)

Traffic Conditions = **Existing**

Major Street Name = **Campus Street**

Total of Both Approaches (VPH) = **682**

Number of Approach Lanes on Major Street = **1**

Minor Street Name = **Stewart Street**

High Volume Approach (VPH) = **353**

Number of Approach Lanes On Minor Street = **1**

WARRANTED FOR A SIGNAL

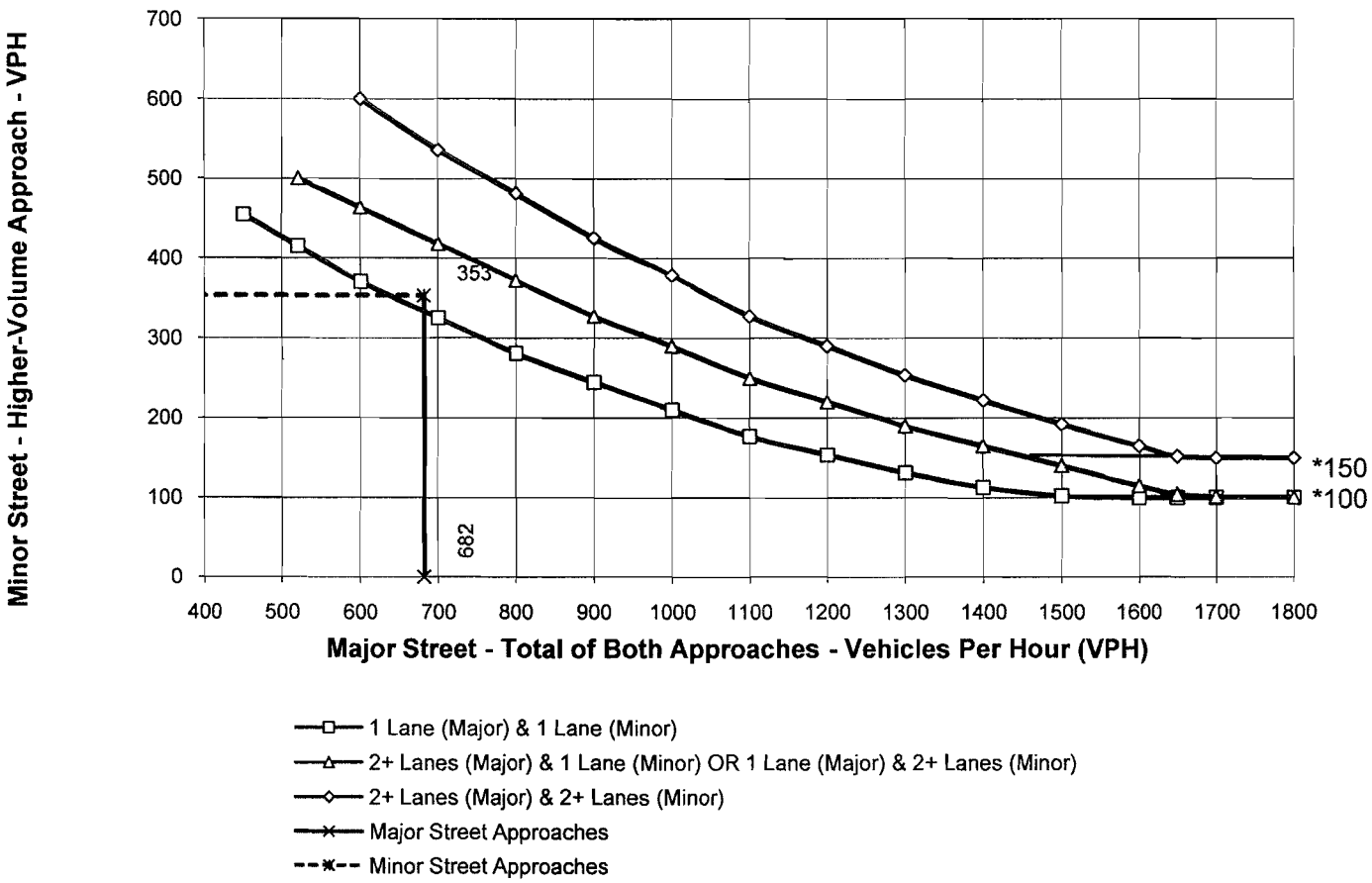

* Note: 150 vph applies as the lower threshold volume for a minor-street approach with two or more lanes and 100 vph applies as the lower threshold volume for a minor-street approach with one lane.

WARRANT 3, PEAK HOUR
(Urban Areas)

Traffic Conditions = **Opening Year (2013) Without Project**

Major Street Name = **Anderson Street** Total of Both Approaches (VPH) = **1070**
Number of Approach Lanes on Major Street = **2**

Minor Street Name = **Prospect Avenue** High Volume Approach (VPH) = **275**
Number of Approach Lanes On Minor Street = **1**

WARRANTED FOR A SIGNAL

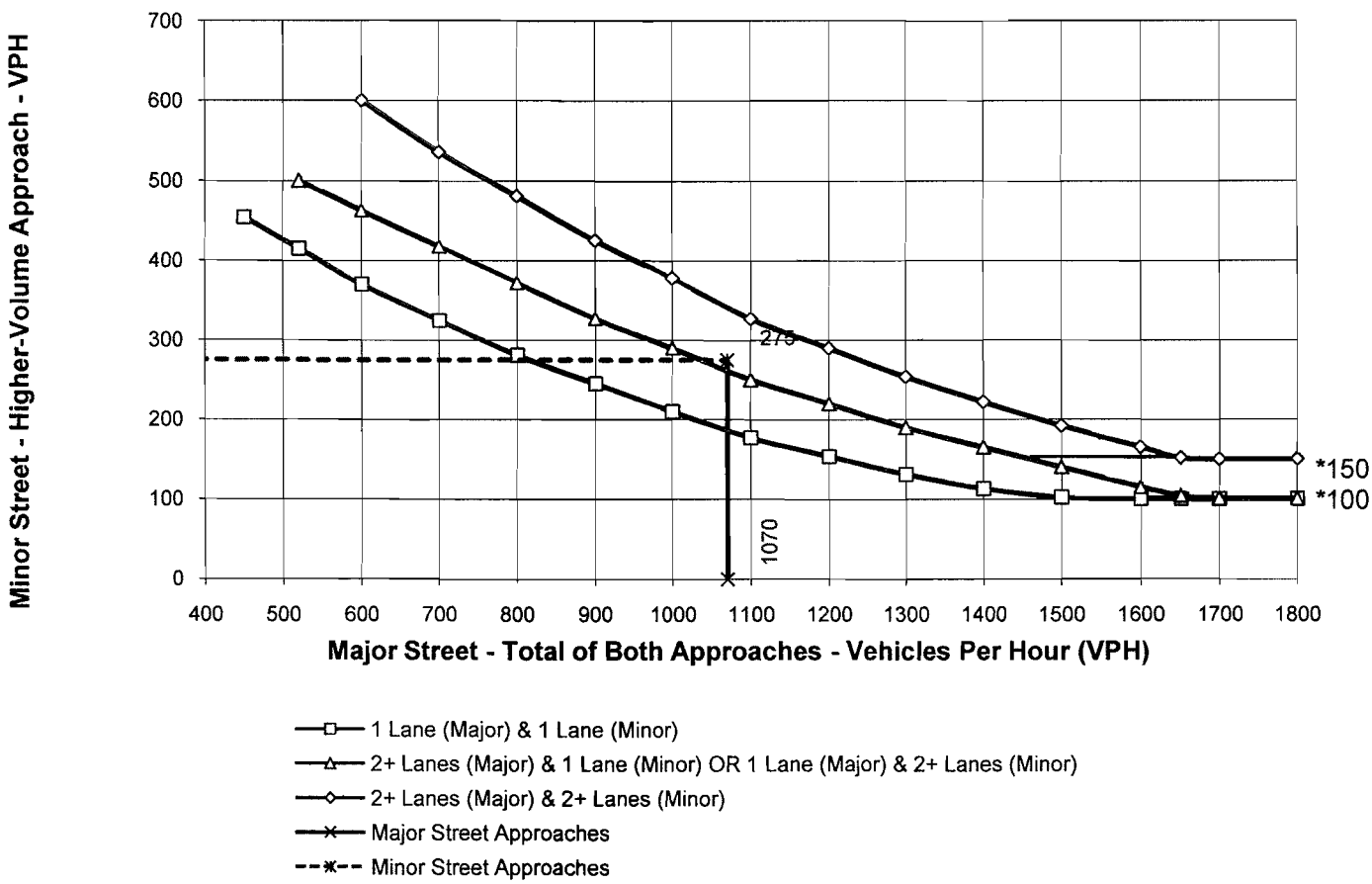

* Note: 150 vph applies as the lower threshold volume for a minor-street approach with two or more lanes and 100 vph applies as the lower threshold volume for a minor-street approach with one lane.

WARRANT 3, PEAK HOUR
(Urban Areas)

Traffic Conditions = **Opening Year (2013) With Project**

Major Street Name = **Campus Street** Total of Both Approaches (VPH) = **782**
Number of Approach Lanes on Major Street = **1**

Minor Street Name = **University Avenue** High Volume Approach (VPH) = **310**
Number of Approach Lanes On Minor Street = **1**

WARRANTED FOR A SIGNAL

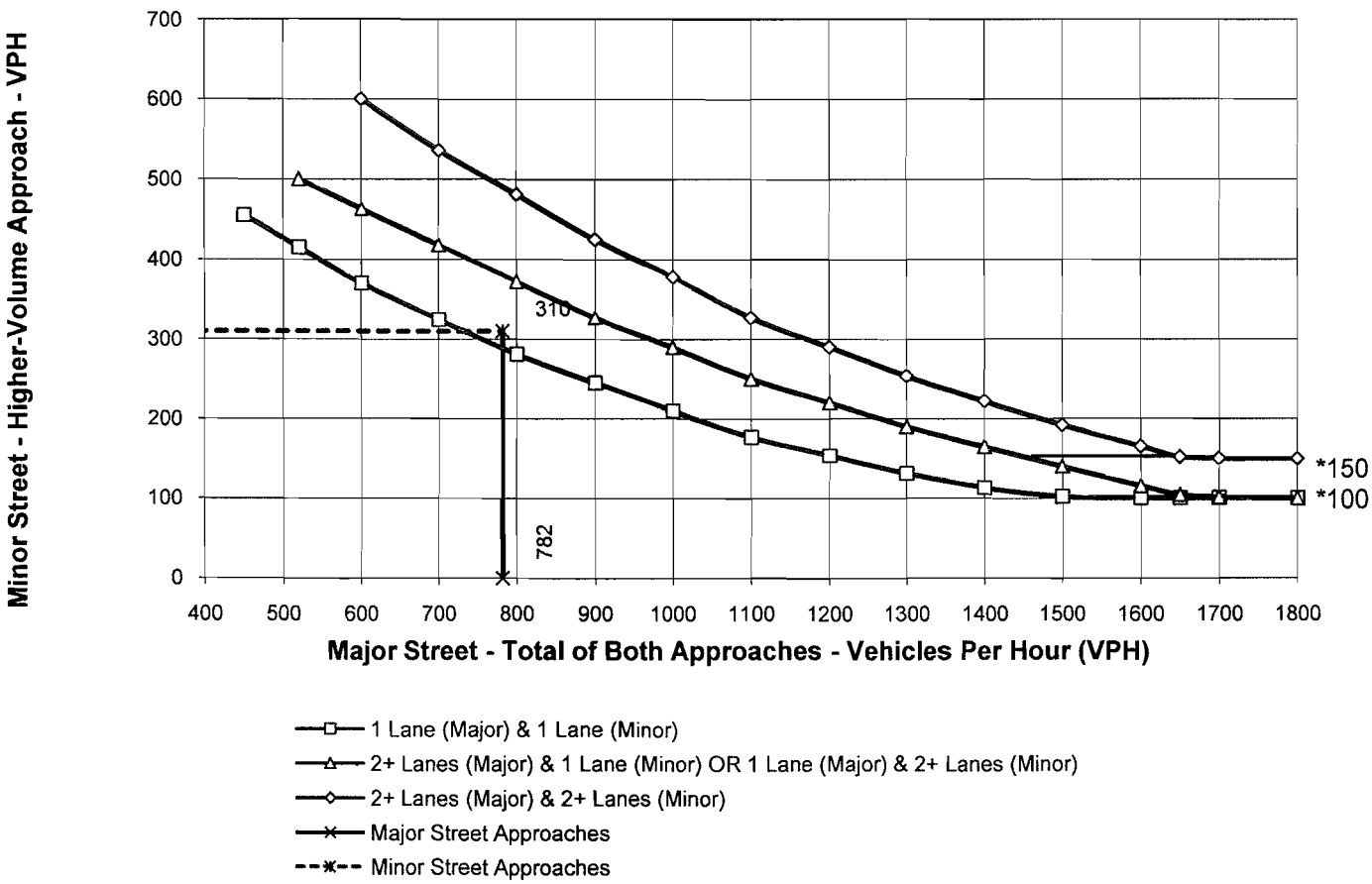

* Note: 150 vph applies as the lower threshold volume for a minor-street approach with two or more lanes and 100 vph applies as the lower threshold volume for a minor-street approach with one lane.

WARRANT 3, PEAK HOUR
(Urban Areas)

Traffic Conditions = **Opening Year (2023) Without Project**

Major Street Name = **Anderson Street** Total of Both Approaches (VPH) = **972**
Number of Approach Lanes on Major Street = **2**

Minor Street Name = **Mound Street** High Volume Approach (VPH) = **682**
Number of Approach Lanes On Minor Street = **2**

WARRANTED FOR A SIGNAL

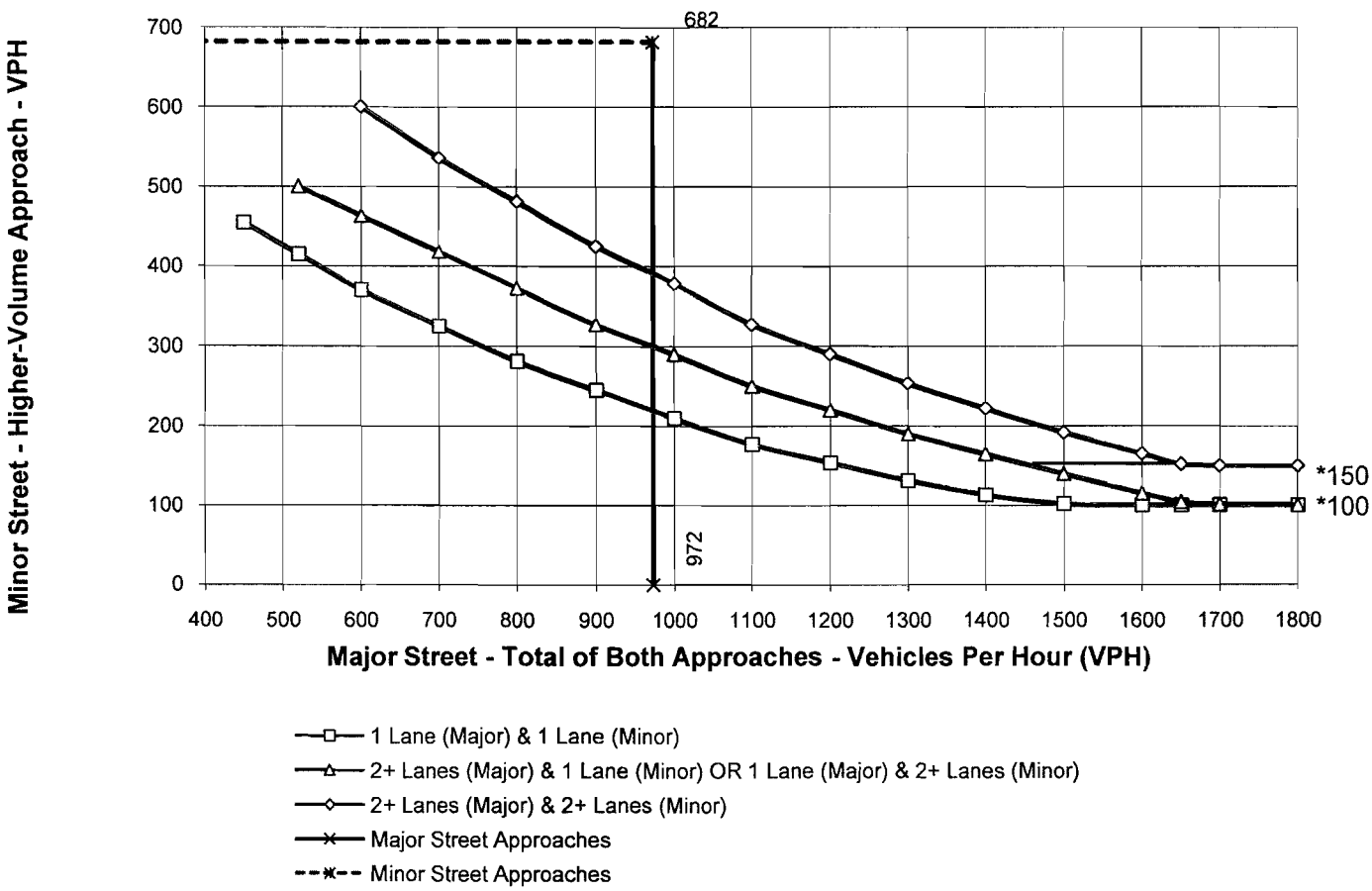

* Note: 150 vph applies as the lower threshold volume for a minor-street approach with two or more lanes and 100 vph applies as the lower threshold volume for a minor-street approach with one lane.

Kunzman Associates, Inc.

OVER 35 YEARS OF EXCELLENT SERVICE

1111 Town & Country Road, Suite 34
Orange, California 92868
(714) 973-8383

www.traffic-engineer.com